MAX SPARE
LIMITED
QUALITY. PRECISION. SPEED.

HYDRAULIC SEAL CATALOGUE

ASIA'S LARGEST SEAL PLANT

INTRODUCTION

Max Spare was incorporated in 1959 for manufacturing of Hydraulic and Pneumatic Seals, Rotary Shaft Seals and 'O' Rings. Over the years, Max Spare has evolved as India's No. 1 Seal Manufacturer, catering to a wide spectrum of industries with different sealing needs. Max Spare with its emphasis on Quality and Technology is ISO 9001-2015 certified and exports its seals and 'O' rings to quality conscious markets in Europe and North America. Having mutually enriching alliances with leading seal manufacturer and stockiest in Europe, Canada and the United States, exports contribute more than 60% of the current sales.

Max Spare caters to both replacement and Original Equipment market. With application ranging from Gear Boxes, Bearings, Pumps, Hydraulic and Pneumatic Systems, Constructions and Mining Equipments, Hydraulic and Pneumatic Cylinders, etc. With the advantages of having all facilities under one roof, Max Spare is well equipped to handle all sealing requirements from simple 'O' rings to complex profiles and large dia seals upto 3000 mm.

As a leading seal manufacturer for many years, Max Spare has diversified it's business to enter into the maximum products for its customers by adding new products range.

With Quality, Precision & Speed Max Spare is geared up to cater the requirements of its customers with best service support.

Warning

FAILURE, IMPROPER SELECTION OR IMPROPER USE OF THE PRODUCTS AND / OR SYSTEMS DESCRIBED HEREIN OR RELATED ITEMS CAN CAUSE DEATH, PERSONAL INJURY AND PROPERTY DAMAGE.

Please carefully evaluate your particular sealing application. In any application for which there might be a risk of property damage or injury to persons, the final selection of a suitable product should be made by individuals possessing sufficient technical skills and competence.

The product properties and operating parameters described in this catalogue are based upon industry standards or reported by others. Product cross-reference comparisons are based on data obtained from others and are shown in this handbook only to assist in the initial consideration of the type and features of the product required by your application. Only a trained professional should make the final product selection.

The data presented herein are subject to change without notice. Although care has been taken in compiling the data presented in this catalogue. Max Spare doe not assume any responsibility or liability for errors in any data published in this catalogue.

Warranty / Liability

Max Spare Limited warrants that all products sold by it, shall be free of defects in material and workmanship to the first user / purchaser for a period of one year from the date of purchase**. At the discrepancy of Max Spare any product proven unable to meet the design capabilities for which it was produced shall be replaced or repaired free of charge incuding transportation, but not the cost of installation, provided that the product was not subject to negligence, accident, or damages beyond our control. All other warranties expressed or implied including warranty of merchantability are here by disclaimed. We shall not be responsible for any consequential damages.

** Sales are subject to terms and considerations

ALL CONTENTS COPYRIGHT @ 22 MAX SPARE LIMITED (Edition 31102021)
All Rights Reserved including translation, metrification, electronic, magnetic and optical copying. No part may be reproduced without permission in writing from Max Spare Ltd.

Hyadraulic Product Catalogue
HYD. 981015 - D

The information contained in this catalogue is based on many years of experience in the fluid power industry, specifically in the manufacturing and application of fluid sealing and bearing systems. This information is a product of extensive in-house testing&vast international experience across all types of industries since 1959. However, unknown parameters and conditions may restrict general statements during usage.

We would be obliged to offer our recommendations and sealing solutions for your particular application. However, no warranty or guarantee is expressed since the conditions of use are beyond our control.

The proportions of all the seal ranges have been determined to give a satisfactory performance when used with the recommended operating conditions.

The material from which each seal type is made could be found in the description under each seal type.

Max Spare is continuously improving its ranges and reserves the right to withdraw or modify any item shown in this catalogue without notice.

Content

03 General Technical Information

- Design Information
- Sealing Materials
- Fluid Compatibility Table
- Causse of Failures & Counter Measures
- Installation and Maintenance of Seals
- Storage of Seals

29 Piston Seal

113 Rod Seal

231 Symmetrical Seal

343 Wiper Seal

431 Guide Ring

441 Bonded Seal

449 Seal Engineering Request Form

Introduction

Hydraulic systems are widely using in various industries thus sealing element have a decisive influence on the design, function and service life of hydraulic cylinders and systems.

There are two main types of hydraulic seals in the system:

- Static Seals: A Static hydraulic seal is in a groove and sees no movement and only sealing within its confined space. Eg. Cap seals and Gaskets.
- Dynamic seals: Dynamic Rod seals are expose to movement on its inner diameter along with the shaft or rod of a cylinder while Piston seal is expose to movement on its outer diameter along with the bore of a hydraulic cylinder.

To design hydraulic rod and piston sealing systems, there is a need to focus on the principles of dynamic seal interaction and tribology to ensure long service life, proper seal function, minimum wear, low friction, and smooth operation. Hydraulic seals are made from variety of materials such as...

- Polyurethane
- Rubber
- PTFE

The materials used will depend on the specific operating conditions. The most important consideration for tribal qualities of a dynamic sealing system are:

- Pressure
- Temperature
- Speed
- Media
- Surface Roughness
- Fluid Media
- System Tolerances

FACTORS INFLUENCING SEALING ELEMENT

System pressure, sliding speed, temperature, media, surface roughness and system tolerances are the important parameters taken in to consideration while choosing the type of the sealing element.

Pressure

The pressure is an important factor influencing the sealing system because the system working force is obtain by the cylinder bore diameter and the system pressure. Maxspare offers sealing solutions up to 700 bar (can recommend up to 2000 bar) operating pressure of the sealing elements.

Temperature

The operating temperature of the sealing media affects the choice of sealing materials. The ideal working temperature for the sealing element and system is 50°C, but the application temperature usually goes up to 100°C. In dynamic applications, sealing elements have direct contact with the sliding surface and this is the reason it is affected by the heat generated by friction forces. The system temperature should be less than the working temperature of the sealing element. At low temperatures, the seal material will stiffen and may become brittle although it will relax as the temperature rises. With high temperatures, the seal material will become more elastic and lose compression set. The higher temperatures will also reduce the viscosity of the oil resulting in accelerated wear of the seals. For PTFE seals the effect of temperature will be based on the seal's energiser. Refer sealing materials on page No. 10 to understand the maximum operating temperatures of each sealing elements.

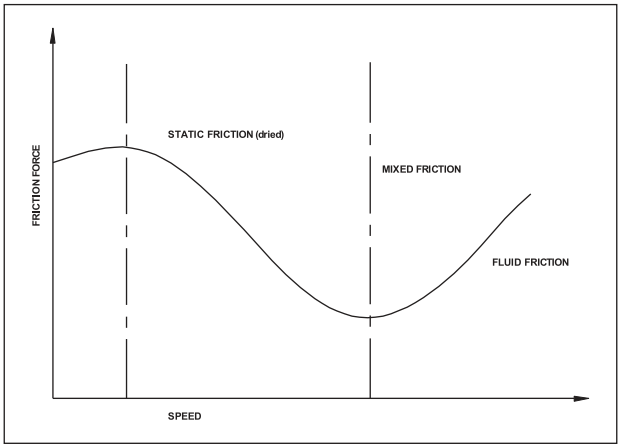

Fig. 1 : Friction force Vs Speed

Speed

Seals ride on lubricating film between the seal lip and moving surface. Friction will depend upon the thickness of this lubricating film, which will be squeezed in to minimum thickness when there is no movement, and creates friction. There are 3 different frictional force occur because of oil film:

1. Static (Dry friction)
2. Mixed friction (Dry and Media friction)
3. Fluid friction (there is no dry contact)

When dynamic movement stars, a high friction force arises which leads to mixed friction, it results in the immediate decrease in frictional force because more lubricating fluid is then drawn between the seal and moving surface. A point is reached with increasing speed that the frictional force increases again and the seal will begin to wear. Figure 3 shows an increase in the friction force with speed increasing and oil film thickness decreasing. That is why at high sliding speeds the sealing elements should be chosen from PTFE material.

Media

The minimum and maximum operating temperature of the sealing elements do change with the media they are being used in. Sealing elements can be used in mineral oils, hydraulic, atmosphere, water and different type of media are the most common media used with the sealing elements.

The viscosity of the media is one of the reasons for wear in the sealing elements. Pressure and temperature change the viscosity of the media. The viscosity of the media increases with pressure. Increasing temperature reduces the viscosity of the media depends on the type of media. When selecting a media type, the effectiveness of operating pressure and temperature on viscosity should be checked.

Surface Roughness

Surface roughness is an important parameter for sealing elements to work at desired effectiveness. The functional reliability and service life of a seal very much depend on the quality and surface finish of the mating surface to be sealed.

It should be free from scores, scratches, pores, concentric or spiral machining marks, etc. The aim of all types of surface finish is to provide a surface which causes the minimum wear to the seal.

Parameters for specifying a surface finish are defined by ISO 4287 and ISO 4288. The most common surface roughness parameter specified is Ra (in units μm or μin.), i.e. the arithmetic mean deviation of the surface profile.

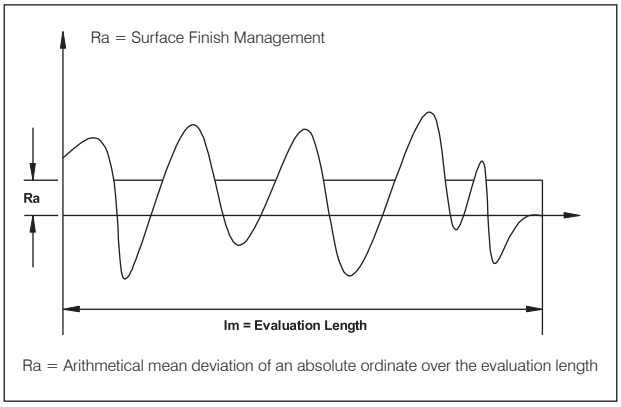

Fig. 2

Recommendations for dynamic sealing surfaces

Piston rods are generally minimum 67 Rockwell hard chrome plated. This gives an excellent tribological surface, provided the rods are produced within the surface range of 0.1 to 0.3 μm Ra, no major problem may ensure, although the optimum surface finish may well depend on the seal material.

Cylinder bore finishes can be more problematic. The recommendations for the cylinder bore surface assume that typical materials and processes are used to machine the bore by either honing or roller burnishing to achieve the specified diameter and finish.

Recommendations for static sealing surfaces

Static sealing surfaces must also have a proper surface finish to enable the desired sealing performance. Generally, these are fine tuned and free from chatter marks.

Table 1 : Surface Finish Table

Surface Roughness	Thermoplastics & Rubber materials		PTFE materials	
	Metric (μmRa)	Inch (μinRa)	Metric (μmRa)	Inch (μinRa)
Dynamic Sealing face ød	0.1 – 0.4	4 – 14	0.05 – 0.2	2 - 8
Static Sealing face øD	1.6 max	63 max	1.6 max	63 max
Static Housing face L	3.2 max	125 max	3.2 max	125 max

System Tolerances

System tolerances are important factors in the life of the sealing elements. Inappropriate dimensions, tolerances, and decentralized hydraulic cylinders lead to rapid wear of the sealing elements, and the system does not provide the required performance. Table 2 shows the general tolerances used in the hydraulic systems.

The sliding surface should be free from Scores, scratches, pores, concentric or spiral machining marks etc. to obtain the required surface roughness values.

The Rods should be made of steel chrome-plated, ground or polished and other parts of the cylinder must be of steel, cast steel, cast iron or special engineering plastics.

Table 2 : General Tolerance Table

Nominal sizes mm		Shafts Units 0.001 mm						Bores Units 0.001 mm			
Over	to	f8	f9	h8	h9	h10	h11	H8	H9	H10	H11
1.6	3	-6 -20	-6 -31	0 -14	0 -25	0 -40	0 -60	+14 0	+25 0	+40 0	+60 0
3	6	-10 -28	-10 -40	0 -18	0 -30	0 -48	0 -75	+18 0	+30 0	+48 0	+75 0
6	10	-13 -35	-13 -49	0 -22	0 -36	0 -58	0 -90	+22 0	+36 0	+58 0	+90 0
10	18	-16 -43	-16 -59	0 -27	0 -43	0 -70	0 -110	+27 0	+43 0	+70 0	+110 0
18	30	-20 -53	-20 -72	0 -33	0 -52	0 -84	0 -130	+33 0	+52 0	+84 0	+130 0
30	50	-25 -64	-25 -87	0 -39	0 -62	0 -100	0 -160	+39 0	+62 0	+100 0	+160 0
50	80	-30 -76	-30 -104	0 -46	0 -74	0 -120	0 -190	+46 0	+74 0	+120 0	+190 0
80	120	-36 -90	-36 -123	0 -54	0 -87	0 -140	0 -220	+54 0	+87 0	+140 0	+220 0
120	180	-43 -106	-43 -143	0 -63	0 -100	0 -160	0 -250	+63 0	+100 0	+160 0	+250 0
180	250	-50 -122	-50 -165	0 -72	0 -115	0 -185	0 -290	+72 0	+115 0	+185 0	+290 0
250	315	-56 -137	-56 -186	0 -81	0 -130	0 -210	0 -320	+81 0	+130 0	+210 0	+320 0
315	400	-62 -151	-62 -202	0 -89	0 -140	0 -230	0 -360	+89 0	+140 0	+230 0	+360 0
400	500	-68 -165	-68 -223	0 -97	0 -155	0 -250	0 -400	+97 0	+155 0	+250 0	+400 0
500	630	-76 -186	-76 -251	0 -110	0 -175	0 -280	0 -440	+110 0	+175 0	+280 0	+440 0
630	800	-80 -205	-80 -280	0 -125	0 -200	0 -320	0 -500	+125 0	+200 0	+320 0	+500 0

Hydraulic fluids

The fluids used in hydraulic systems has many functions:

- Lubricate surfaces in contact and relative speed.
- Clean the system by removing contaminated substances and wear particles to filter the body or settlement areas.
- Power is transmitted by pressure flow acting on the movable part.
- Prevent component corrosion.
- Cool the system by transferring heat from high loads, motion or turbulent areas and propagating it to the entire volume of the system, including storage tanks and cooling equipment.

The fluids used in hydraulic systems are available in a variety of chemical compositions and viscosity grades for specific applications.

The most commonly used media in hydraulic systems is a mineral oil-based fluid with various additives. Refer to Page No. 20 to 22 for the compatibility of different fluid media.

Chemical composition of hydraulic fluids will affect the service life and performance of the seal depends on compatibility of sealing materials. Non compatible fluid can cause,

- swelling or shrinking of seal
- hardening and embrittlement of the sealing material
- discoloration of the sealing material
- softening or loss of strength of the sealing material
- Polymer chains deteriorate or become tangled, resulting in material fatigue or loss

Extrusion Gap

Maximum admissible fitting clearance value between head/rod or piston /liner shall be carefully evaluated in order to prevent extrusion problems in the sealing area. This clearance gap mainly depends on the material hardness, maximum pressure in the cylinder, the temperature and load resistance of the guide rings. Please refer technical pages of each profile to understand the maximum extrusion gap shall be maintained.

Friction & Groove Machining

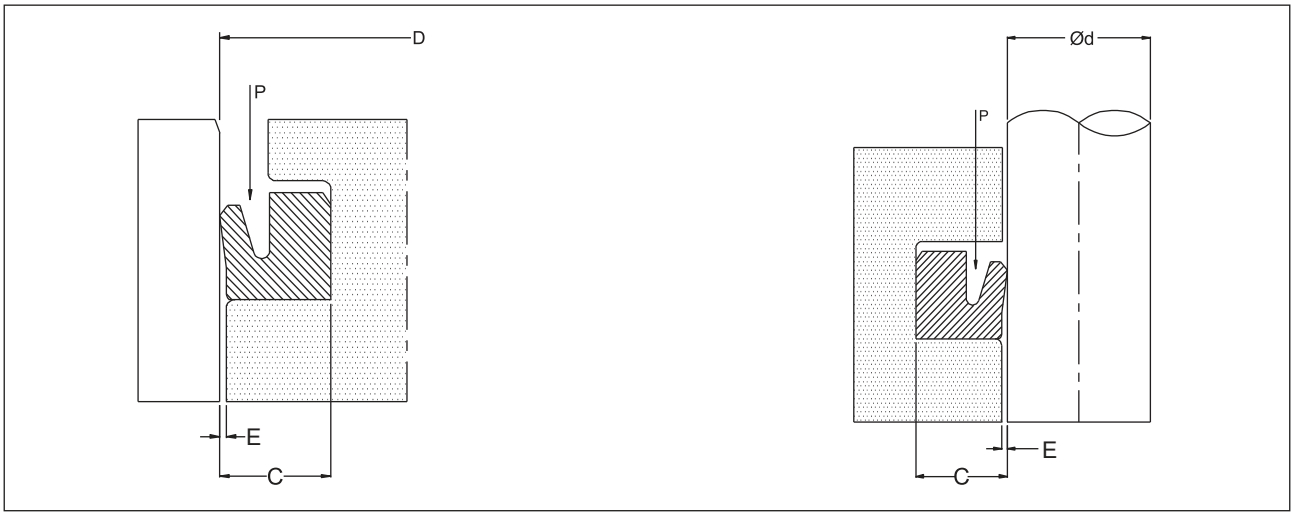

1) LIGHT DUTY, LOW SPEED HYDRAULIC CYLINDER

Pressure: 160 BAR Speed: 0.5 m/sec. Temp.: -30°C to + 100°C (upto +220°C on request)

PISTON SEALS	ROD SEALS	WIPER SEALS	WEAR RINGS	TYPE
P52	E07 / S19	W11 / W12	SG	Double Acting Compact Cylinder
E07 (1 X 2 Nos.)	E07 / S19	W11 / W12	SG	General Purpose Cylinder
P42 (1 X 2 Nos.)	E07 / S19	W11 / W12	SG	High Performance & Large Dia. Cylinder

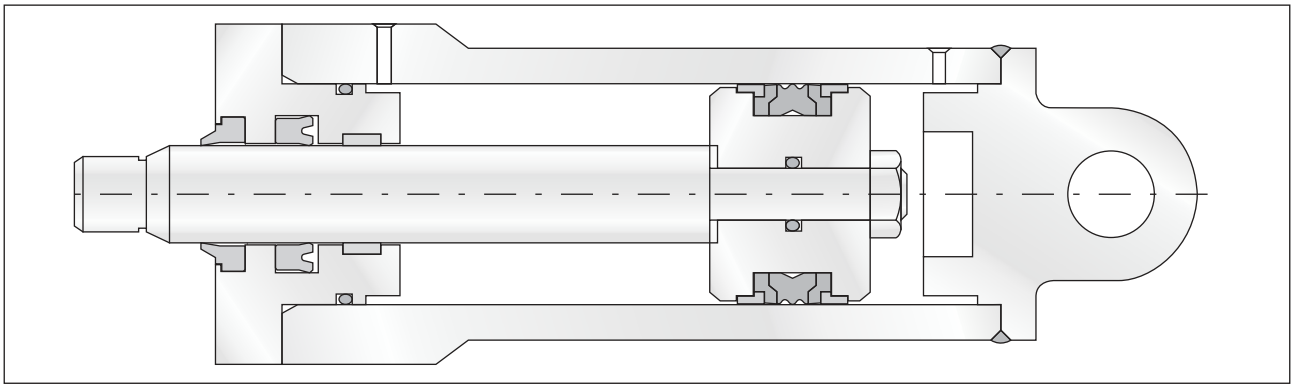

2) LIGHT DUTY, HIGH SPEED HYDRAULIC CYLINDER

Pressure: 400 BAR Speed: 10 m/sec. Temp.: -30°C to + 100°C (upto +220°C on request)

PISTON SEALS	ROD SEALS	WIPER SEALS	WEAR RINGS	TYPE
P45	S15	W38	PG (1 X 2 Nos.) SG	Double Acting, Can also be used for Medium Duty Applications

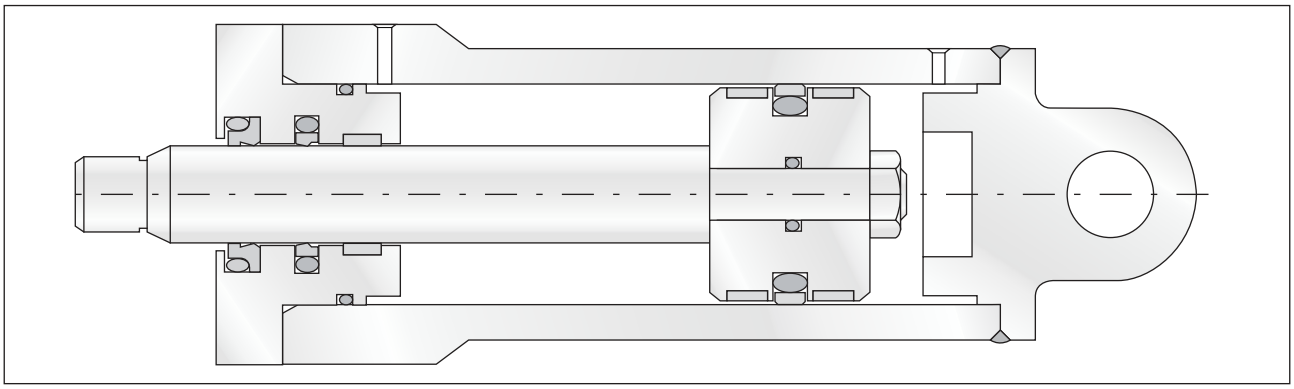

3) MEDIUM DUTY, LOW SPEED HYDRAULIC CYLINDER

Pressure: 300 BAR Speed: 1.0 m/sec. Temp.: -30°C to + 100°C (upto +220°C on request)

PISTON SEALS	ROD SEALS	WIPER SEALS	WEAR RINGS	TYPE
P45	(a) S15 + (b) S19	W11 / W12	PG (60%) (1 X 2 Nos.) SG 60% (1 x 2 Nos.)	Double Acting Mobile Cylinder
P45	(a) S15 + (b) S47	W11 / W12	SG (60%) (1 X 2 Nos.) PG 60% (1 x 2 Nos.)	Same as above but Split Housing for SB

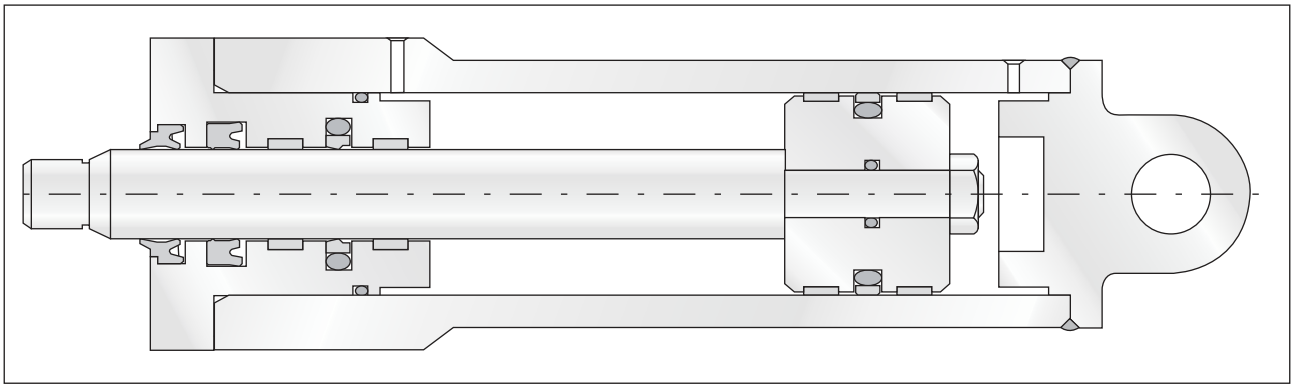

4) MEDIUM DUTY, HIGH SPEED HYDRAULIC CYLINDER

Pressure: 400 BAR Speed: 10 m/sec. Temp.: -30°C to + 100°C (upto +220°C on request)

PISTON SEALS	ROD SEALS	WIPER SEALS	WEAR RINGS	TYPE
P45	S15 (1 X 2 Nos.)	W38	PG (1 X 2 Nos.) SG (1 X 2 Nos.)	Double Acting Cylinder best suited for Hydraulic Presses or Moulding Machines

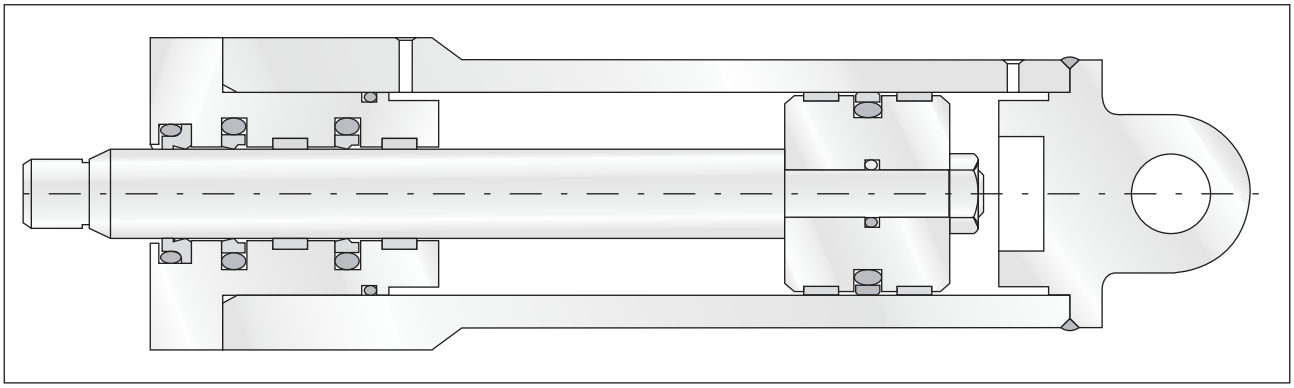

5) HEAVY DUTY, LOW SPEED, LOW PRESSURE HYDRAULIC CYLINDER

Pressure: 300 BAR Speed: 0.5 m/sec. Temp.: -30°C to + 100°C (upto +220°C on request)

PISTON SEALS	ROD SEALS	WIPER SEALS	WEAR RINGS	TYPE
P42 (1 x 2 Nos.)	E19 / S59 /S60	W14	Not Applicable	Double Acting Compact Cylinder for tough conditions preferred for Mobile Equipment but split housing & preferred for large cylinder elements.

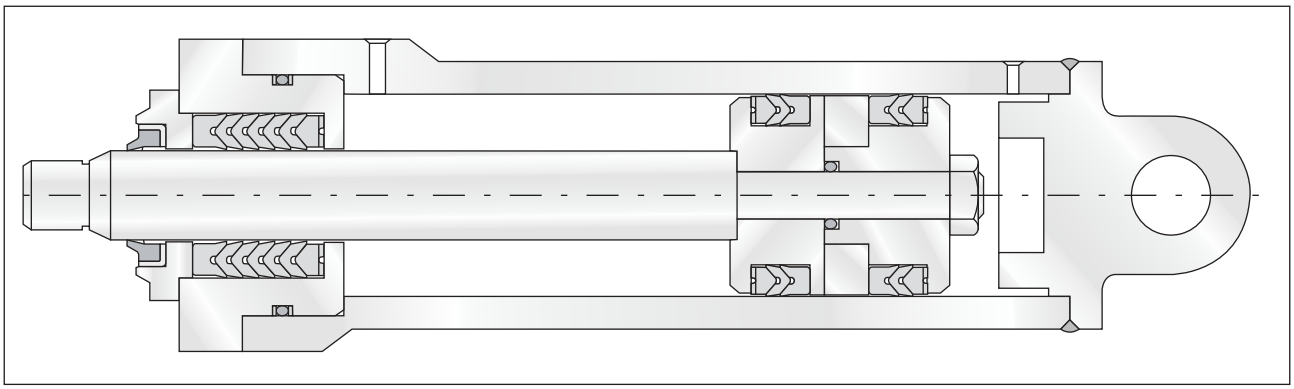

6) HEAVY DUTY, MEDIUM SPEED, HIGH PRESSURE HYDRAULIC CYLINDER

Pressure: 400 BAR Speed: 5 m/sec. Temp.: -30°C to + 100°C (upto +220°C on request)

PISTON SEALS	ROD SEALS	WIPER SEALS	WEAR RINGS	TYPE
P76	S15 + S19	W13	SG (1 X 2 Nos.)	Double Acting Compact Hydraulic Cylinder, good characteristics at speeds upto 4 m/sec. Excellent for Mobile Equipment.

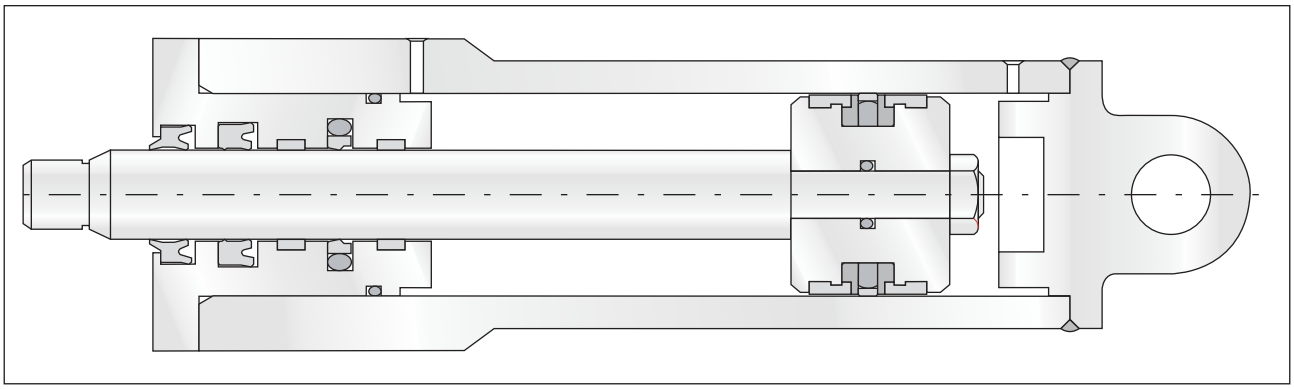

ELASTOMERS

Material Name	Maxspare Code	Hardness Range	Service Temperature	Default Colour

ACRYLONITRILE-BUTADIENE

Commonly known as NITRILE or BUNA-N. The acrylonitrile content of nitrile rubber varies from 18 to 50%, the polymers with high acrylonitrile content have better oil resistance whereas low acrylonitrile content exhibit better compression set and low-temperature flexibility. Nitrile has moderate physical properties but good abrasion resistance. Gas permeability is low and Ozone resistance and electrical properties are poor.

NBR	NT	40/45 to 90/95 Shore A	-30°C to +100°C	Black
NBR/Fabric	NF	40/45 to 90/95 Shore A	-20°C to +100°C	Black
NBR Food grade	NT-FG	60/65to 85/90 Shore A	-30°C to +100°C	Green
NBR Low temperature	NT-LT	45/50 to 90/95 Shore A	-50°C to +100°C	Black
NBR High temperature	NT-HT	60/65 to 90/95 Shore A	-30°C to +120°C	Black
NBR peroxide cured	NT (PEROXIDE)	60/65 to 90/95 Shore A	-30°C to +120°C	Black
NBR+Teflon blend	NT-TF	80/85 Shore A	-30°C to +100°C	Black
NBR Kevlar Fabric	NKF	70/75 Shore A	-30°C to +100°C	Black
NBR (Machining)	CNT	87/90 Shore A	-30°C to +100°C	Black

HYDROGENATED NITRILE-BUTADIENE (HNBR / HSN)

The properties of HNBR depend upon the acrylonitrile content and the degree of hydrogenation of the butadiene copolymer. They have rather better oil and chemical resistance than Nitrile Rubber and can withstand much higher temperatures. It has excellent resistance to sour oil and gas, steam, hot water, and ozone. Physical properties (e.g. tensile and tear strength, elongation, abrasion resistance, compression set, etc.) are also excellent and compounds exhibit good dynamic behavior at elevated temperatures. Limitations include poor electrical properties, poor flame resistance, and attack by aromatic oils and polar organic solvents.

HNBR	HN	60/65 to 90/95 Shore A	-30°C to +150°C	Black
HNBR/Fabric	HF	60/65to 70/75 Shore A	-30°C to +130°C	Black
HNBR Food grade	HN-FG	70/75 to 80/85 Shore A	-30°C to +150°C	Green
HNBR Low temperature	HN-LT	60/65 to 85/90 Shore A	-45°C to +150°C	Black

CARBOXYLATED NITRILE-BUTADIENE (XNBR)

XNBR compounds are like NBR but stronger, enhanced tear, and improved abrasion behaviour in applications subjected to stress..

XNBR	XN	60/65 to 90/95 Shore A	-30°C to +100°C	Black

Material Name	Maxspare Code	Hardness Range	Service Temperature	Default Colour

POLYCHLOROPRENE RUBBER (CR)

Chloroprene Rubber (CR), widely known as Neoprene®, was one of the first oil resistant synthetic rubber. It is a good general-purpose rubber with an excellent balance of physical and chemical properties. However, it has only moderate resistance to petroleum-based oils and fuels. It has better chemical, oil, ozone, and heat resistance than natural rubber. Gives excellent rubber-metal bonds and good resilience.

Neoprene®	NP	40/45 to 90/95 Shore A	-40°C to +120°C	Black
Neoprene®/Fabric	NPF	40/45 to 90/95 Shore A	-20°C to +100°C	Black

NATURAL RUBBER ((NR)

Natural rubber is the only non-synthetic rubber with excellent tensile strength, elongation, and abrasion resistance. With its good tear strength, fatigue resistance and excellent compression set it is the ideal choice for dynamic applications at low and ambient temperatures.

Natural Rubber	NR	40/45 to 90/95 Shore A	-40°C to +80°C	Black

POLYACRYLIC RUBBER (ACM)

Polyacrylic (ACM) has good resistance to hot hydraulic oil, oxidation, and ozone. The water resistance is poor, as is its resistance to acids and alkalis. Low-temperature applications are limited to -10°C.

ACM	PC	70/75 to 80/85 Shore A	-10°C to +170°C	Black

BUTYL RUBBER (IIR)

Butyl rubber is also known as Isobutylene-isoprene (IIR). It has exceptionally low gas permeability making it ideal for inner tubes and high pressure/vacuum sealing applications. Its chemical unsaturation gives it excellent resistance to heat, ozone, and weathering. Very low resilience makes it suitable for shock and vibration damping and is not suitable for use in mineral or petroleum-based fluids.

Butyl Rubber	BU	60/65 to 80/85 Shore A	-40°C to +120°C	Black
Butyl Rubber with 1 or 2 ply fabric	BU+PLY FABRIC	60/65 to 80/85 Shore A	-40°C to +100°C	Black

ETHYLENE PROPYLENE DIENE RUBBER (EPDM)

EPDM is a copolymer of ethylene and propylene and a smaller amount of a diene monomer. It has excellent heat, ozone, and chemical resistance.Low-temperature resistance is excellent and alsogives excellent electrical resistance. EPDM is not suitable for exposure to petroleum-based fluids and di-ester lubricants. (EPDM seals are peroxide cured and sulfur curing is used for EPDM cords)

EPDM	EP	50/55 to 90/95 Shore A	-40°C to +120°C	Black
EPDM Food Grade	EP-FG	60/65 to 80/85 Shore A	-40°C to +100°C	Green

Material Name	Maxspare Code	Hardness Range	Service Temperature	Default Colour

SILICON RUBBER (VMQ) VINYL-METHYL-POLYSILOXANE

Silicone Rubbers are ideal for high and low-temperature applications.It is characterized by high thermal resistance, good cold flexibility, good dielectric properties, very good resistance to oxygen, and ozone attack. The main advantage is that it retains flexibility at very low temperatures and can withstand continuous heating without hardening, making it suitable for low and high-temperature applications. SILICON compounds have poor strength and tear resistance. Their resistance to oils and fuels is poor, concentrated acids and alkalis, water and steam at temperatures over 100°C will destroy the material.

Silicon	SL	30/35 to 80/85 Shore A	-60°C to +200°C	Red
Silicon Food grade	SL-FG	50/55 to 80/85 Shore A	-60°C to +200°C	Green
Silicon Low temperature	SL-LT	70/75 Shore A	-70°C to +200°C	Red

FLUROSILICON RUBBER (FVMQ)

Fluorosilicones (FVMQ) can operate over a very wide range of temperatures. It has excellent resistance to di-ester lubricants, ozone, and weathering.They have good electrical strength and moderate oil resistance.

Flurosilicon	FSL	60/65 to 80/85 Shore A	-70°C to +220°C	Blue

STYRENE-BUTADIENE RUBBER (SBR)

Styrene-Butadiene rubber is a widely-used general-purpose rubber with an extensive range of applications. Key benefits of SBR are abrasion resistance, Perfect impact strength, Good resilience, and High tensile strength. Its physical strength, resilience, and low-temperature properties are usually inferior to Natural Rubber. SBR is not resistant to oil or fuel resistant and it can be prone to weathering.

SBR	SB	-30°C to +100°C	-10°C to +170°C	Black

POLYBUTADIENE BLEND RUBBER (PBR)

Polybutadiene rubber (PBR)) is polymerized butadiene. It is very similar to natural rubber, polyisoprene. It is good for uses which require exposure to low temperatures. It is used in blends with other rubber types for improved elasticity, wear resistance, and low-temperature properties.

PBR	PBR70	70/75 Shore A	-50°C to +80°C	Black

Material Name	Maxspare Code	Hardness Range	Service Temperature	Default Colour

FLUROELASTOMER (FKM) Viton®

Fluoroelastomers or Fluorocarbons are commonly known as Viton®. The main characteristics of FKM are resistant to high temperatures and chemical stability. They also display minimal weight loss in high vacuum and its permeability to gases is low. It is compatible with fire-resistant Hydraulic fluids, hot oils, greases, hydrocarbon, chlorinated hydrocarbons most organic acids, even at high concentrations and several organic compounds. It has excellent resistance to hot water and steam. FKM, however, is not resistant to methanol, ketones, esters, and ethers.

Viton®/ FKM	VT	55/60 to 90/95 Shore A	-30°C to +220°C	Brown
Viton®/Fabric	VF	70/75 to 90/95 Shore A	-20°C to +150°C	Brown
Viton® Food grade	VT-FG	55/60 to 90/95 Shore A	-30°C to +220°C	Green
Viton® Low temperature	VT-GLT	55/60 to 90/95 Shore A	-40°C to +220°C	Black
Viton® GF	VT-GF	65/70 to 80/85 Shore A	-20°C to +210°C	Black
Viton® Anti Explosive Decompression	VT-AED	70/75 to 90/95 Shore A	-20°C to +210°C	Black
Viton® Extreme	VT70-Extreme	70/75 Shore A	-20°C to +220°C	Black
Viton®Excellent Low Temperature	VT-XLT	70/75 & 85/90 Shore A	-50°C to +220°C	Black
Viton®Electric resistant	VT-ER	90/95 Shore A	-20°C to +210°C	Black
Viton®Kevlar	VT-KEVLAR	80/85 Shore A	-20°C to +210°C	Black

PERFLUROELASTOMER (FFKM)

Perfluroelastomers (FFKM) are fully-fluorinated fluorocarbon polymers which have elastomeric characteristics. They fill an important niche for applications involving aggressive chemicals at temperatures up to 320°C. They are extremely expensive and have poor physical properties and limited use at low temperatures. They are the most chemically resistant elastomers that are on the market and have outstanding high temperature and chemical resistanceand also have an excellent stem, ozone, and weathering resistance. An important disadvantage is poor low-temperature properties.

FFKM	FF	70/75 & 85/90 Shore A	-10°C to +300°C	Black
FFKM	FF	70/75 & 85/90 Shore A	-10°C to +300°C	Black

TETRAFLUOROETHYLENE / PROPYLENE (FEPM, TFE/P, AFLAS®)

AFLAS® (TFE/P, FEPM) isknown for its use in oil field applications and its electrical resistance properties. This elastomer is a copolymer of tetrafluoroethylene (TFE) and propylene. Its chemical resistance is excellent across a wide range of aggressive media. It has excellent heat resistance with continuous service temperature capability of 230°C, high electrical resistivity, and excellent oil resistance and is not compatible with aromatic fuels, ketones, and acetone.

AFLAS®	AF	70/75 to 85/90 Shore A	-10°C to +220°C	Black

THERMOPLASTICS & THERMOSETS

Material Name	Maxspare Code	Hardness Range	Service Temperature	Default Colour

POLYURETHANE (PU)

The polyurethane material has extremely good mechanical properties such as high tensile strength, abrasion resistance, tear strength, extrusion strength, and above all, good flexibility. PU has good resistance to swelling in mineral oils and greases, water, oil mixtures, and aliphatic hydrocarbons. PU is not resistant to polar solvents, chlorinated hydrocarbons, aromatics, brake fluids, acids, and alkalis.

PU General purpose & Food grade	PU-70	40/45 to 90/95 Shore A	-40°C to +80°C	Blue
PU General purpose	PU-80 & PU-85	60/65to 85/90 Shore A	-40°C to +80°C	Blue
PU General purpose & Food grade	PU-90 & PU-95	45/50 to 90/95 Shore A	-40°C to +100°C	Blue
PU GG25	PU-98	60/65 to 90/95 Shore A	-30°C to +100°C	Red/Blue
PU (General Purpose & Food grade)	PU-65D& PU-70D	80/85 Shore A	-30°C to +150°C	White/Red
PU(High oil resistance Poly caprolactone ester-based)	PU-X	87/90 Shore A	-40°C to +150°C	Red/Orange /Blue/Yellow
PU (Hydrolysis/Water-based for pneu.application)	PU-W90	60/65 to 90/95 Shore A	-40°C to +130°C	Green/Blue / Red
PU (Hydrolysis/Water-based for pneu.application)	PU-W95	60/65 to 90/95 Shore A	-40°C to +130°C	Blue/Green / Red
Cast PU (Oil resistant)	CPU-O	60/65 to 90/95 Shore A	-30°C to +100°C	Red
Cast PU (Hydrolysis Resistant)	CPU-W	60/65 to 90/95 Shore A	-30°C to +100°C	Red

POLYPROPYLENE (PP)

PP is one of the lightest polymers among all commodity plastics. This feature makes it a suitable option for lightweight\weight saving applications. It has excellent resistance to dilute and concentrated acids, alcohols and bases, and good resistance to aldehydes, esters, aliphatic hydrocarbons, ketones but limited resistance to aromatic and halogenated hydrocarbons and oxidizing agents. Polypropylene is a highly flammable material and it retains mechanical & electrical properties at elevated temperatures in humid conditions. PP has good resistance to environmental stress cracking.

PP	PP	80 M	-20°C to +95°C	Black/Off white

Material Name	Maxspare Code	Hardness Range	Service Temperature	Default Colour

POLYETHYLENE (PE)

Polyethylene is a lightweight and durable thermoplastic and is one of the most widely produced plastics. Polyethylene is used in applications ranging for films, tubes, plastic parts, laminates, etc. in several markets (packaging, automotive, electrical, etc.). The most common types of polyethylene are
Low-density polyethylene (LDPE) – Features are flexible and good transparency, good moisture barrier properties, high impact strength at low temperature, excellent resistance to acids, bases, and vegetable oils.
Linear low-density polyethylene (LLDPE) - As compared to LDPE, it has higher tensile strength and higher impact and puncture resistance.
High-density polyethylene (HDPE) - Excellent Chemical Resistance, high tensile strength, excellent moisture barrier properties, hard to semi-flexible.
Ultra-high-molecular-weight polyethylene (UHMWPE) - It has excellent mechanical properties such as high abrasion resistance, impact strength, and low coefficient offriction. Even at high temperatures, it is resistant to several solvents, except aromatic, halogenated hydrocarbons, and strong oxidizing materials, such as nitric acid. UHMWPE is suitable for high wear applications.

LDPE	LDPE	80 M	-70°C to +90°C	Black/Off white
LLDPE	LLDPE	65 M	-70°C to +100°C	Black/Off white
HDPE	HDPE	80 M	-70°C to +110°C	Black/Off white
UHMWPE	UHMW	65 D	-250°C to + 80°C	Black/Off white

POLYACETAL (POLYALDEHYDE / POM)

Polyoxymethylene (POM), commonly known as acetal. It is a highly crystalline thermoplastic that is known for its high flexural and tensile strength, stiffness, hardness, and low creep under stress. It also has a low coefficient of friction, excellent chemical resistance, and outstanding fatigue properties, but only moderate heat stability and insufficient flame resistance.POM is available under the trade names Delrin®, Duracon®, etc. Glass-reinforced grades of polyacetal are also available.

Acetal	ACT-1	94 M	-40°C to +140°C	White
25% Glass-filled Acetal	ACT-2	96 M	-40°C to +160°C	White
15% Glass-filled Acetal	ACT-3	95 M	-40°C to +160°C	White
Cast Acetal	CAL	94 M	-40°C to +140°C	White

POLYAMIDE (PA)

PA material, polyamide, or commonly called Nylon is a semi-crystalline thermoplastic with low density and high thermal stability. Polyamide plastic offers: High wear resistance, High thermal stability, Very good strength and hardness, High mechanical damping characteristics, Good sliding properties, and Good chemical resistance. The most common polyamide plastics are Nylon 6, cast PA 6 and Nylon 66 (PA66).

Nylon PA6	NY-1	80 M	-30°C to +100°C	Black/ White
Cast Nylon PA6	CNY	85 M	-30°C to +100°C	Black/ White
Cast Nylon PA6	NY2(A)	79 M	-40°C to +140°C	Black/ White
Nylon PA66 + 33% Glass filled	NY2(B)	95 M	-40°C to +150°C	Black/ White
Nylon PA66 + 13% Glass filled	NY2(C)	95 M	-40°C to +150°C	Black/ White

Material Name	Maxspare Code	Hardness Range	Service Temperature	Default Colour

POLYPHENYLENE SULFIDE (PPS)

PPS material (chemically known as polyphenylene sulfide) is a semi-crystalline, high-temperature engineering thermoplastic. Due to its structure, PPS is a very chemically resistant polymer with very good mechanical strength, even at temperatures above 200°C. In addition to its low water absorption, PPS polymer also has good dimensional stability and excellent electrical properties.

PPS 40% Glass filled	PPS	100 M	Up to +300°C	White

THERMOPLASTIC ELASTOMER (TPE / Hytrel®)

Thermoplasticplastic elastomer combines many of the most desirable characteristics of high-performance elastomers and flexible plastics. It features exceptional toughness and resilience; high resistance to creep, impact, and flex fatigue; flexibility at low temperatures; and good retention of properties at elevated temperatures. Besides, it resists deterioration from many industrial chemicals, oils, and solvents.DuPont™ trade name is Hytrel®

Hytrel® TPE 6356 Dupont	NY-1	80 M	-30°C to +100°C	Black/ White
Hytrel®Arnitel EM400 / Dupont 4069	CNY	85 M	-30°C to +100°C	Black/ White
Hytrel®Arnitel PL461	NY2(B)	95 M	-40°C to +150°C	Black/ White
Hytrel®Arnitel PL461	NY2(B)	95 M	-40°C to +150°C	Black/ White
Hytrel® TPE 7246 Dupont	NY2(C)	95 M	-40°C to +150°C	Black/ White

POLYETHERETHERKETONE (PEEK)

PEEK is a unique semi-crystalline high-performance plastic material with an excellent balance of physical properties. It has one of the highest levels of heat resistance and mechanical strength available among plastics. It is also one of the best choices when looking for good chemical resistance, as well as radiation resistance, also, and very good dimensional stability.

PEEK	PEEK	99M	Up to +280°C	Beige
70% PEEK, 10% PTFE, 10% CARBON FIBRE, 10% GRAPHITE	PEEK-AF803	86D	Up to +280°C	Black

POLYTETRAFLUROETHYLENE (PTFE / Teflon®)

VIRGIN PTFE material (chemically known as Polytetrafluoroethylene, colloquially referred to as Teflon®) is one of the most chemically inert materials known and is used in many different applications and industries. PTFE is an incredibly versatile material with a wide variety of applications. It has extreme chemical resistance, a massive temperature range is completely unaffected by UV, excellent electrical insulation properties. Flexible, low friction, inert.

VirgingTeflon	PTFE	60±5 Shore D	-250°C to +250°C	White
RULON J Gold	PFT-PF	60 Shore D	-200°C to +250°C	Dull Gold

Material Name	Maxspare Code	Hardness Range	Service Temperature	Default Colour

BRONZE FILLED TEFLON (BFT)

Bronze Filled PTFE is reinforced with bronze powder with the percentage varying between 40% and 60%, resulting in a very hard-wearing material. The advantages of BFT are very heavy due to high specific gravity, electrically conductive, good wear-resistant properties, great deformation strengths, and good thermal conductivity. It has weaker chemical resistance than other grades of PTFE and is not suitable for electrical applications.

40% Bronze filled PTFE	BRT-40	65±3 Shore D	-200°C to +260°C	Brown
40% Bronze + 5% MOS2 filledPTFE	MBRT-40	65±3 Shore D	-200°C to +260°C	Brown
60% Bronze filled PTFE	BRT-60	70±3 Shore D	-200°C to +260°C	Brown
60% Bronze + 5% MOS2 filledPTFE	MBRT-60	70±3 Shore D	-200°C to +260°C	Brown

GLASS FILLED PTFE (GLT)

The properties of this material are high compressive strength, Improved wear resistance under load & permanent deformation, better thermal / electrical conductivity etc and are mainly used in valve components.

15% Glass-filled PTFE	GLT-15	60±3 Shore D	-200°C to +260°C	Black
15% Glass + 5% MOS2 filled PTFE	MGLT-20	60±3 Shore D	-200°C to +260°C	Black
25% Glass-filled PTFE	GLT-25	60±3 Shore D	-200°C to +260°C	Black
8% Glass + 3% MOS2 filled PTFE	MGLT-11	60±3 Shore D	-200°C to +260°C	Black

CARBON+GRAPHITE FILLED PTFE (CGRT)

The properties of this material are high compressive strength, Improved wear resistance under load & permanent deformation, better thermal / electrical conductivity etc and are mainly used in valve components.

23% Carbon + 2% Graphite filled PTFE	CGRT-25	63±3 Shore D	-200°C to +260°C	Beige
4% Carbon + 7% Graphite filled PTFE	CGRT-11	63±3 Shore D	-200°C to +260°C	Black

Material Name	Maxspare Code	Hardness Range	Service Temperature	Default Colour

GRAPHITE FILLED PTFE (GRT)

Graphite filled PTFE provides some similar benefits to normal carbon filled PTFE but without the greatly improved wear resistance. Graphite lowers the coefficient of friction and has excellent self lubricating properties. It can be combined with either carbon or glass or even both to reap the combined benefits of all three fillers.

15% Graphite filled PTFE	GRT-15	65±3 Shore D	-200°C to +260°C	Black
15% Graphite + 5% MOS2 filled PTFE	MGRT-20	65±3 Shore D	-200°C to +260°C	Black
25% Graphite filled PTFE	GRT-25	70±3 Shore D	-200°C to +260°C	Black

CARBON FILLED PTFE (CAT)

Carbon filled PTFE benefits from improved compressive strength, reduced deformation under heavy loads, and better wear resistance than virgin PTFE. Because carbon is conductive, it is suitable for applications which require higher thermal conductivity than PTFE alone and also becomes static dissipative due to its electrical conductivity. Carbon may be added in the form of powder or fibre. It can be abrasive, but not to the same extent as glass.
15% Carbon Filled PTFE- Carbon filled PTFE has excellent compressive strength, wear, and chemical resistance. It provides good thermal conductivity and low permeability. Ideal material for dynamic sealing applications.
25% Carbon Filled PTFE- The addition of Carbon Fibre to PTFE increases the compressive strength and wear resistance. It provides good thermal conductivity and low permeability. Commonly used in sealing applications.

15% Carbon filled PTFE	CAT-15	60±3 Shore D	-200°C to +260°C	Black
25% Carbon filled PTFE	CAT-25	60±3 Shore D	-200°C to +260°C	Black

PHENOLIC RESIN FABRIC (CPF)

Phenolic Fabricsare made with various weights of woven cotton fabric, impregnated with specifically formulated phenolic resins, bonded together under heat and pressure to produce a thermoset composite. These industrial laminates are a popular alternative to acrylic, because of its high resistance to flexing. The base material and resin combination used is dependent upon the intended application of the finished product. Physical strength, resiliency, ease and versatility of fabrication, and excellent electrical properties make phenolics useful as support components in a wide range of mechanical and electrical applications. (Available only up to 220 mm diameter)

Phenolic Resin Fabric	CPF	89M	-20°C to +120°C	Brown

POLYSTER RESIN FABRIC (PRW)

The main features of PRW are high compressive strength, internally lubricated, offers high bearing load capacity, and are compatible with wide range of fluids including water based fluids and phosphate esters. (Available from diameter 70 mm or in strip form)

Polyster Resin Fabric	PRW	HRM100	-30°C to +120°C	Turquoise

Material Name	Maxspare Code	Hardness Range	Service Temperature	Default Colour

FOOD COMPLIANT MATERIAL

Sealing material plays an important role in food, beverages & pharma industries application. As seals may come into contact with products that are intended for human consumption. Therefore, sealing material ingredients and process should be comply with the FDA regulations and more

Maxspare had developed special compounds which are compliant with FDA and hadbeen approved and certified by an goverment testing laboratory

NBR	NT50 (FG) to NT85 (FG)	50 Shore 'A' to 90 Shore 'A'	177-2600.Cla.(F)	Green
FKM (Viton®)	VT55 (FG) to VT85 (FG)	55 Shore 'A' to 90 'A'	177-2600.Cla.(F)	Green
EPDM	EP50 (FG) to EP85 (FG)	50 Shore 'A' to 90 Shore 'A'	177-2600.Cla.(F)	Green
Silicon	SL60 (FG) to SL70 (FG)	60 Shore 'A' to 75 Shore 'A'	177-2600.Cla.(F)	Green
Polyurethane	PU 5 FG)	90 Shore 'A'	177-2600.Cla.(F)	Red
PTFE	PFT	65 D	–	White
UHMWPE	UHMW	65 D	–	White
Acetal	ACT	M 84	–	White

AFLAS® is a registered trademark of Asahi Glass Co., Ltd.
Kalrez® is a registered trademark of DuPont Performance Elastomers LLC.
Viton® is a registered trademark of DuPont Performance Elastomers LLC.
Neoprene® is a registered trademark of DuPont Performance Elastomers LLC.

MAX SPARE LIMITED
QUALITY. PRECISION. SPEED.

These are general guidelines given and recommended to users conduct their own functional tests to determine the suitability of any compound with their fluid media.

R = Recommended
M = Marginal
U = Unsatisfactory
X = Insufficient Data

Fluid	NBR	SBR	EPDM	CR	ACM	PU	VMQ	FKM
Acetaldehyde	U	U	R	U	U	U	R	U
Acetamide	R	U	R	R	U	U	M	U
Acetic Acid	M	M	R	R	U	U	R	U
Acetone	U	M	R	M	U	U	M	U
Acetophenone	U	U	R	U	U	U	U	U
Acetylene	R	R	R	R	X	X	R	R
Ammonia	R	R	R	R	U	X	R	U
Ammonium Hydroxide	R	R	R	R	U	U	R	R
Amly Acetate	U	U	M	U	U	U	U	U
Anderol L-774	M	U	U	U	R	U	U	R
Antifreeze	R	R	R	R	U	U	R	R
Aniline	U	U	R	U	U	U	U	M
Ansul Ether	M	U	M	U	U	R	U	U
Aroclors	M	U	R	U	U	X	M	R
Askarel	R	U	U	U	U	U	U	R
ASTM #1	R	U	U	R	R	R	R	R
ASTM #3	R	U	U	U	R	R	U	R
ASTM Fuel A	R	U	U	R	R	R	U	R
ASTM Fuel B	R	U	U	U	U	R	U	R
ASTM Fuel C	R	U	U	U	U	R	U	R
ASTM Fuel D	M	U	U	U	U	R	U	R
Auto.Trans.Fluid	R	U	U	M	R	R	M	R
Beer	R	R	R	R	U	U	R	R
Benzaldehyde	U	U	R	U	U	U	U	U
Benzene	U	U	U	U	U	U	U	R
Benzine	R	U	U	R	R	R	U	R
Benzoic Acid	U	U	U	U	U	U	U	R
Benzophenone	U	U	R	X	U	U	U	R
Benzl Alcohol	U	U	U	R	U	U	X	R
Bleach	R	R	R	R	U	U	U	R
Borax	R	R	R	U	R	R	R	R
Boric Acid (Non petroleum)	R	R	R	R	U	R	R	R
Bromine	U	R	R	M	U	U	M	U
Bromobenzene	U	U	U	U	U	U	U	R
Bunker Oil	R	U	U	U	R	R	U	R
Butane	R	M	U	R	R	U	U	R
Butter	R	U	M	R	R	R	R	R
Butyl Acetate	U	U	U	U	U	U	U	U
Butyl Alcohol	R	R	R	R	U	U	R	R
Butyl Amine	M	U	U	U	U	U	R	U
Butyl Carbitol	U	U	R	M	U	X	U	M
Butyl Cellosolve	M	U	R	M	U	U	R	U

Fluid	NBR	SBR	EPDM	CR	ACM	PU	VMQ	FKM
Carbitol	R	R	R	R	U	U	R	R
Carbitol Acetate	U	U	U	U	U	U	U	R
Carbon Disulfide	U	U	U	U	U	X	U	R
Carbon Tetrachloride	R	U	U	U	U	U	U	R
Carbonic Acid	R	R	R	R	R	R	R	R
Castor Oil	R	R	R	R	R	R	R	R
Cellosolve	U	R	U	U	U	U	U	U
Chassis Grease	R	U	U	M	R	X	U	R
Chloracetic Acid	U	U	R	U	U	U	X	U
Chloracetone	U	U	R	M	X	X	U	R
Chlordane	R	U	U	M	X	X	U	R
Chlorine	U	U	R	U	U	U	X	R
Chlorobenzol	U	U	U	U	U	U	U	R
Chloroform	U	U	U	U	U	U	U	R
Chlorsulfonic Acitd	U	U	U	U	U	U	U	U
Chrome Plating Solu.	U	U	R	U	U	U	R	R
Chromic Acid	U		X	U	X	X	M	R
Citric Acid	R	R	R	R	X	X	R	R
Cod Liver Oil	R	U	U	R	R	U	R	R
Coffee	R	R	R	R	U	U	R	R
Corn Oil	R	U	U	U	R	U	R	R
Creosote	R	U	U	R	R	M	U	R
Creoste oil	R	U	U	M	X	X	M	R
Creosylic Acid	U	U	U	U	U	U	U	R
Crude Oil	R	U	U	U	R	X	U	R
Cyclohexane	R	U	U	M	R	R	U	R
Cyclohexanol	R	U	U	R	X	X	U	R
Decalin	U	U	U	U	U	U	U	R
Denatured Alcohol	R	R	R	R	U	U	R	R
Diacetone	U	U	R	U	U	U	U	U
Dibutyl Amine	U	U	U	M	U	U	U	U
Dibutyl Phthalate	U	U	R	U	U	X	X	M
Dichlorp Aniline	U	U	U	U	U	U	U	M
Dichloro Butane	R	U	U	U	U	U	U	R
Diesel Oil	R	U	U	M	U	U	U	R
Diethylamine	R	R	R	R	U	M	R	U
Diethyl Benzene	M	U	U	U	X	X	X	H
Diethylene Glycol	R	R	R	R	U	U	R	R
Dimethyl Ether	U	U	U	M	M	R	U	U
Dimethyl Formamide	U	X	R	X	X	X	R	U
Dimethyl Phthalate	U	U	R	U	U	X	X	R
Dimethyl Terephthalate	U	U	U	U	U	U	U	R
Dioctyl Phthalate	U	U	R	U	U	U	M	R

For more information regarding Chemical Compatibility with sealing materials please visit our website
www.maxspare.com/technical-support/chemical-compatibility

These are general guidelines given and recommended to users conduct their own functional tests to determine the suitability of any compound with their fluid media.

R = Recommended
M = Marginal
U = Unsatisfactory
X = Insufficient Data

Fluid	NBR	SBR	EPDM	CR	ACM	PU	VMQ	FKM
Dioctyl Phthalate	U	U	R	U	U	U	M	R
Dioxane	U	U	R	U	U	U	U	U
Diphenyl	U	U	U	U	U	U	U	R
Dow Corning 550	R	R	R	R	R	R	R	R
Dow Gard	R	R	R	R	M	M	R	R
Dowtherm A & E	U	U	U	U	U	U	U	R
Elco 28	R	U	U	M	R	R	R	R
Epoxy Resins	X	X	R	R	X	X	X	U
Ethane	R	U	U	R	R	M	U	R
Ethanol	R	R	R	R	U	R	R	R
Ethanolamine	R	R	R	R	U	R	R	R
Ethyl Acetate	U	U	R	U	U	U	R	U
Ethyl Benzene	U	U	U	U	U	U	U	R
Ethyl Cellulose	R	R	R	R	U	R	R	U
Ethyl Chloride	R	R	R	R	M	R	U	R
Ethyl Ether	M	U	M	U	U	R	U	U
Ethyl Formate	U	U	R	R	X	X	X	R
Ethyl Hexanol	M	R	R	R	X	X	X	R
Ethyl Merlaptan	U	U	X	M	X	X	M	R
Ethylene Chloride	U	U	U	U	U	U	U	R
Ethylene Oxide	U	U	R	U	U	U	U	U
Formaldehyde	M	M	R	M	U	U	R	U
Formic Acid	M	R	R	R	X	X	M	U
Freon 12	R	R	R	R	X	R	U	R
Fuel Oil	R	U	U	R	R	U	U	R
Furan	U	U	X	U	U	X	X	X
Furfural	U	U	R	U	U	X	U	U
Furfuryl Alcohol	U	U	R	U	U	U	U	X
Fyrquel	U	U	R	U	U	U	R	R
Gallic Acid	R	R	R	R	U	U	X	R
Gasoline	R	U	U	R	R	R	U	R
Gelatin	R	R	R	R	U	U	R	R
Glucose	R	R	R	R	X	U	R	R
Glycerine	R	R	R	R	U	U	R	R
Heptane	R	U	U	R	R	R	U	R
Hexaldehyde	U	U	R	R	X	X	R	U
Hexane	R	U	U	R	R	R	U	R
Hexanol	R	R	M	R	U	U	R	R
Home Heating Oil	R	U	U	M	R	R	R	R
Hydrazine	R	R	R	R	X	X	R	X
Hydrochoride Acid	R	M	R	R	M	U	U	R
Hydrocyanic Acid	R	R	R	R	U	X	M	R
Hydrogen Peroxide	R	R	R	R	U	X	R	R

Fluid	NBR	SBR	EPDM	CR	ACM	PU	VMQ	FKM
Hydrogen Sulfied	U	U	R	R	U	X	M	U
Hydroquinone	M	U	U	U	U	X	X	R
Hypoid Gear Lube	R	U	U	M	R	R	M	R
Iodine	R	R	R	U	X	X	X	R
Isocyanate	X	X	X	X	X	X	X	R
Iso Octane	R	U	U	R	R	R	U	R
Iso Phorone	U	U	R	U	U	U	U	U
Isocyanate	X	X	X	X	X	X	X	R
Isopar	R	R	R	R	U	U	R	R
Isopropanol	R	R	R	R	U	U	R	R
Isopropyl Acetate	U	U	R	U	U	U	U	U
JP-4 (MIL-J5624)	R	U	U	U	R	R	U	R
JP-4(MIL-5624)	R	U	U	U	R	R	U	R
Kerosene	R	U	U	R	R	R	U	R
Lacquers	U	U	U	U	U	U	U	U
Lactic Acid	R	R	R	R	U	X	X	R
Lard	R	U	R	R	R	R	R	R
Linoleic Acid	R	U	U	R	X	X	R	R
Linseeed Oil	R	U	M	M	R	X	R	R
Lye Solutions	R	R	R	R	U	U	R	R
Malathion	R	U	U	X	X	X	U	R
Maleic Acid	U	U	U	U	U	X	X	R
Mercury	R	R	R	R	X	X	X	R
Meter-Cresol	U	U	U	R	U	U	U	R
Methacrylic Acid	U	U	R	R	U	U	U	M
Methane	R	U	U	R	R	M	U	R
Methanol	R	R	R	R	U	U	U	U
Methyl Acetate	U	U	R	R	U	U	U	U
Methyl Cellosolve	M	U	R	R	U	U	U	M
Methyl Ether Ketone	U	U	R	U	U	U	U	U
Methyl Mercaptan	X	X	R	X	X	X	X	X
Methylene Chloride	U	U	U	U	U	U	U	R
Milk	R	R	R	R	U	U	R	R
Mineral Oil	R	U	M	R	R	R	R	R
Mineral Spirits	R	U	U	U	R	R	U	R
Monovinyl Acetylene	R	R	R	R	X	X	R	R
Mustard	X	R	R	X	X	X	R	R
Naphtha	R	U	U	U	R	R	U	R
Naphthalene	U	U	U	U	X	X	U	R
Naphthenic Acid	R	U	U	U	X	X	U	R
Natural Gas	R	R	U	R	R	R	R	R
Neatsfoot Oil	R	U	R	U	R	R	R	R
Nitric Acid	U	M	R	U	U	U	U	M

These are general guidelines given and recommended to users conduct their own functional tests to determine the suitability of any compound with their fluid media.

R = Recommended
M = Marginal
U = Unsatisfactory
X = Insufficient Data

Fluid	NBR	SBR	EPDM	CR	ACM	PU	VMQ	FKM
Nitrobenzene	U	U	U	U	U	U	U	R
Nitropropane	U	U	R	U	U	U	U	U
Octane	R	U	U	U	U	U	U	R
Octanol	R	R	R	R	U	U	R	R
Oleic Acid	M	U	U	M	X	X	U	R
Oleum	R	U	U	M	X	X	U	R
Oronite 8200	R	U	U	R	X	R	U	R
Oxalic Acid	R	R	R	R	R	X	X	R
Pentane	R	M	U	R	R	U	U	R
Perchlorethylene	R	U	U	U	U	U	U	R
Petroleum Ether	U	U	U	U	U	U	U	R
Phenol	U	U	U	U	U	U	U	R
Phenylhydrazine	U	M	U	U	U	X	X	R
Phosphoric Acid	R	R	R	R	M	U	R	R
Pine Oil	R	U	U	U	U	X	X	R
Potassium Hydrodide	R	R	R	R	U	U	M	U
Propane	R	U	U	R	R	M	U	R
propanol	R	R	R	R	U	U	R	R
Propyl Acetate	U	U	R	U	U	U	U	U
Pydraul	U	U	R	U	U	U	U	R
Pyranol	R	U	U	R	R	R	U	R
Pyridine	U	R	U	U	U	X	U	U
Rapeseed Oil	R	U	R	R	R	R	U	R
Resurcinol	X	R	R	X	X	X	X	X
SAE 10W30	R	U	U	M	R	R	R	R
Seawater	R	R	R	R	U	U	R	X
Silicone Grease	R	R	R	R	R	R	R	R
Silver Nitrate	R	R	R	R	R	R	R	R
Skelly Solvent	R	U	U	U	X	X	X	R

Fluid	NBR	SBR	EPDM	CR	ACM	PU	VMQ	FKM
Skydrol	U	U	R	U	U	U	U	U
Skydrol 500	U	U	R	U	U	U	U	U
Sodium hydroxide	R	R	R	R	U	R	R	R
Sovasol	R	U	U	R	R	R	U	R
Soy Bean Oil	R	U	M	M	R	X	R	R
Stearic Acid	R	R	R	R	R	U	U	R
Stoddard Solvent	R	R	R	R	U	U	R	R
Sucrose	R	R	R	R	R	U	U	R
Sulphuric Acid	R	R	R	R	R	U	U	R
Tall Oil	R	U	U	M	R	U	X	R
Tannic Acid	R	R	R	R	U	X	R	R
Tar	R	U	U	M	U	X	R	R
Tartaric Acid	R	R	R	R	X	X	R	R
Tetrachloro Ethane	U	U	U	U	U	U	U	R
Tetralin	U	U	U	U	U	U	U	R
Tidewater	R	U	U	R	R	R	R	R
Toluene	U	U	U	U	U	U	U	R
Trichloro Ethylene	M	U	U	U	U	U	U	R
Triethanol Amine	M	R	R	R	U	U	X	U
Turbine Oil	R	U	U	U	R	R	U	R
Turpentine	R	U	U	U	R	U	U	R
UCDn 50HB280X	R	R	R	R	X	X	R	R
Univis J-43	R	U	U	R	R	R	U	R
Varnish	R	U	U	U	U	M	U	R
Vinegar	R	R	R	R	U	U	R	R
Water	R	R	R	R	U	U	R	R
Wheat Gern Oil	R	U	U	M	R	R	R	R
Whiskey & Wine	R	R	R	R	U	U	R	R
Wood Oil	R	U	U	R	X	M	U	R

Agressive Fluids

CIP (Cleaning in Place) and SIP (Sterlization in Place) are the general method for cleaning processing systems. This process ensures safety and toxic contamination of products and minimize recontamination of the process.

Sealing material should be compatible with the chemicals used in CIP & SIP process. Maxspare thus take care of this while selecting an appropriate sealing material.

Compatibility Chart

Chemical	Content	NBR	FKM	EPDM	SILICON	PU	PTFE
Chlorinated Alkalies	Caustic Soda (Mild)	R	M	M	U	R	+
Strong Alkalies	Caustic Soda (Strong)	R	M	M	U	R	+
Strong Acid	Nitric Acid	U	M	M	U	R	+
Sanitizer	Sodium Hypoclorite	X	M	M	X	R	+
Hot Water	-	R	M	R	R	R	+
Steam	-	U	U	R	X	U	+

CAUSES OF SEAL FAILURES & COUNTER MEASURES

SYMPTOM	PHENOMENON	CAUSES	COUNTERMEASURES
Hardening	Hardening of the dynamic face causing glazing and cracks 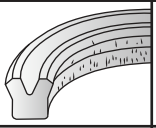	• High stroke speed generating excessive heat	• Reduce stoke speed or use compatible material for speed and heat requirement
	Hardening of the entire seal causing glazing and cracks with loss of elasticity 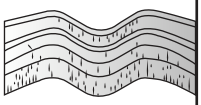	• Incompatible fluid for seal material • High fluid temperature • Deterioration of fluid	• Use compatible fluid • Lower fluid temperature • Change seal material
Wear	Dynamic face of the seal is worn to glossy mirror-like finish 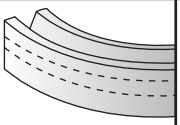	• Excessive lateral load caused by worn-out wearing	• Replace worn-out wearing • Increase wearing surface area
	Sealing lip worn to rounded egg-shaped 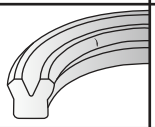	• Insufficient lubrication	• Check Oil viscosity • Use alternate seal
	One side of the dynamic lip showing excessive wear 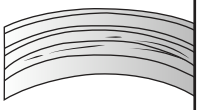	• Rod or Piston bore is eccentric	• Check the eccentricity of the cylinder or replace it if necessary
Scarring	Dent mark or cut on the sealing lip 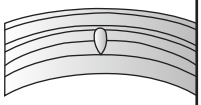	• Foreign particles on the fluid • Scratched bore or rod cylinder	• Check the fluid system • Hone, polish, or de-burr the damaged cylinder
	Sealing side of the seal shows excessive scratches 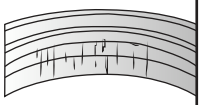	• May be damaged during improper installation • Improper storage	• Proper storage recommended • Installation tool should not have sharp edges
Swelling	Seal material has become softened and misshaped 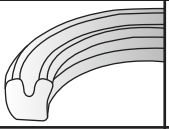	• Absorption of fluid by seal material • Incompatible fluid • Water in the system	• Change the seal material • Use compatible fluid • Flush system of contaminants
Deterioration	Seal lost elasticity and is cracked and crumbled 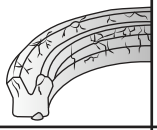	• High fluid temperature • Exposed to ozone or sunlight	• Lower fluid temperature • Proper storage of seal recommended
Grooving	Sealing lip shows axial cuts and grooves signs 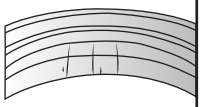	• Sharp foreign particles in the fluid system • May also be caused by imploded air bubbles	• Flush the system • Bleed air from the system
Extrusion	Sealing lip side shows re sign of extrusion 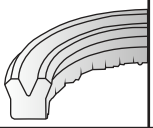	• Excessive extrusion gap • Worn-out wearing • Excessive system pressure	• Use back-up ring • Replace worn-out wearing
	Static heal of the seal side shows the sign of extrusion 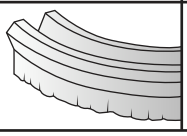	• Uneven sealing surface • Under-sized back-up ring	• Check the sealing surface and machined to size • Use correct back-up ring

CAUSES OF SEAL FAILURES & COUNTER MEASURES

MAX SPARE LIMITED
QUALITY. PRECISION. SPEED.

SYMPTOM	PHENOMENON	CAUSES	COUNTERMEASURES
Fracturing	Chunks of torn material from the sealing side of the seal 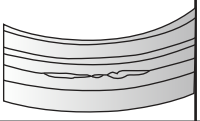	• Excessive system pressure	• Check the pressure and release valves
	Pressure side of the seal is burned or broken 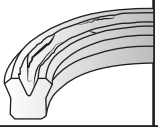	• Dieseling • Explosion of residual air at high pressure	• Check the system pressure • Bleed air from the system
	Cracks or splits on the U portion of the seals 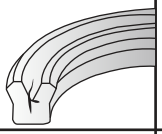	• Frequent high pressure or excessive pressure spikes • Low pressure start-up	• Increase start-up pressure • Use alternate seal for the application
	Breaking off the sealing side of the seal 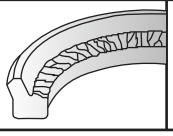	• Deterioration of material or fluid	• Replace fluid • Use alternate seal for the application

INSTALLATION & MAINTENANCE OF SEALS

Sealing performance of a seal is determined to a great extent by the method of assembling a cylinder. We recommend that customers adhere to the tolerance and surface finishes stated in this catalogue. Only by working to these values, the fitting of seals will be made easy and avoid damage during assembly.

1. It is important to keep the entire system and groove area clean and free of dirt and foreign particles.
2. Make sure to flush clean the internal face of cylinder and the interior of pipes. Use compressed air wherever possible.
3. Ensure that the cylinder and piston rod are chamfered.
4. Sharp edges should be deburred and filleted or chamfered.
5. Before assembling the cylinder, apply hydraulic oil (the same oil used in the machine) to the seal, gland, rod, surface, and the internal face of the cylinder.
6. Installation tool should not have any sharp edges.
7. The seals must be properly lubricated before installation
8. If grease is used for lubrication, it must not contain any solid additives (e.g., zinc sulphide or molybdenum disulphide). The grease should be compatible with the seal material.
9. When testing the cylinder after seal installation, it should not be out of the specified measures of pressure, temperature, linear velocity, etc.

INSTALLATION OF PISTON SEALS

U-Seals in closed grooves

The area between the sealing edge and the shaft is the most important. The sealing effect is obtained by preloading the sealing lip, making its inner diameter slightly smaller than the diameter of the shaft. The garter spring ensures constant mechanical pressure and maintains the radial force on the shaft and extends the sealing edge to the defined width. Sealing is guaranteed by the surface tension of the hydrodynamic oil film between the flattened area of the seal and the shaft. The oil thickness must be between 1 and 3 mm to avoid leakage. The meniscus acts as an interface between the outside air and the fluid. Any rupture of the meniscus will cause a leak. This can occur if the shaft contains scratches along the path of the joint.

PTFE Seals

PTFE seals or seals with thicker cross sections may require special assembly tools to save time or avoid seal damage during installation.

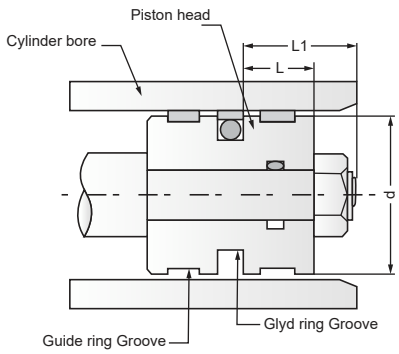

Fig.1

Dimensional Requirements: -

1) Piston Head Dia = d
2) Piston Head Length = L
3) Piston Head Total Length = L1 (in case of nut fitted)

Following are the steps to install PTFE Piston Seal Rings:-

Step 1

- Stretch the O-Ring and install in the groove.
- Place loading mandrel onto the piston head.

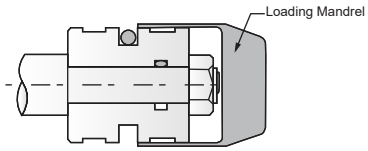

Fig.2

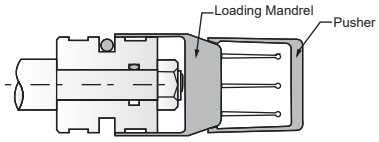

Step 2

- Place Teflon ring on the loading mandrel.
- Place Pusher and push the PTFE ring upto the groove. Teflon ring will evenly expand and slide on the loading mandrel and fit into the groove without damage.

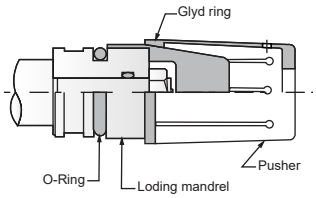

Fig.3

Step 3:

After the installation, it can constrict the seal again using a Piston Seal Constrictor to make it close to the metal groove

Guideline to use Piston Seal Constrictor: -

- Place the cloth tape around the seal and use the constrictor to tighten it.
- It will take 3 to 5 minutes to reach the restoring effect
- A Red PU pad can fill the gap between the tape and the seal, avoiding leaks during the restoring process.

Fig.4

Fig.5

INSTALLATION OF ROD SEALS IN CLOSED GROOVES

U-Seals / PTFE Seals

The rod seals can often be installed into closed grooves by carefully bending the profile into a kidney shape and insert it in to the groove. It is very important to avoid sharp bending. Thin and flexible profiles can be installed by hand while Installation tools must be used to install the profiles with large cross section. After installation, the seal may need to be reshaped into a circular shape by using a cone-shaped tool.

A Seal Twistor can be used to install the Rod Seals. It can reduce the chance of seal damage while installation. Most failures of quality seals are due to bad installation or complicate groove designs. Maxspare introduce series of tools to complete the job reliably. Seal Twistor turns seal to an omega/kidney shape without acute angle (not suitable for fragile materials). It makes the size of seal smaller than the gland hole diameter. Seal can cross all over the sharp chamfers safely then rebounds in the groove.

Size	S		M		L		XL	
Gland hole Ø	22 – 30 mm	0.7” - 1.187”	30 – 50 mm	1.187” - 2”	50 – 70 mm	2” - 2.75	70 – 165 mm	2.75” - 6.5
C/S MAX.	5 mm	0.187”	6 mm	0.234”	10 mm	0.375”	17.5 mm	0.675”

Following are the 4 steps to complete the Job: -

Fix the handle in the stand hole then put two arms inside the seal.

Twist the seal with guiding hand to prevent it popping out

Hold the handles, then put the seal into the gland hold carefully.

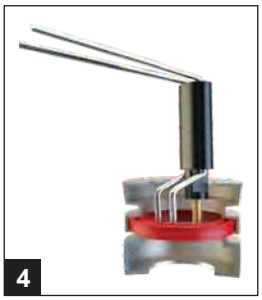

Turn handles back, then pull TWISTOR out to rebound the seal in the groove.

STORAGE OF SEALS

Storage Conditions:

Most polymers, including vulcanized rubber and other elastomers, tend to change their properties during storage and may become unusable. This may be due to hardening, softening, cracking or other deterioration and may result from exposure to oxygen, ozone, light, heat and / or moisture.

The following recommendations indicate the most suitable storage conditions for elastomeric products, whether it is a single item or a composite product.

1. **Temperature** - Ideal storage temperature should be 25°C (77°F). Low temperatures are not permanently harmful provided the rubber items are handled carefully and not distorted. When taken from low temperatures items should be raised to approximately 30°C (86°F) before they are used.
2. **Humidity** – Relative humidity is of 40% to 70% in a draft-free atmosphere.
3. **Light** – The products should be protected from direct sunlight, ultraviolet and artificial light have a high UV content.
4. **Oxygen and Ozone** - Wrapping, storage in airtight containers or other suitable means should be used for vulcanised rubber items. Storage in containers that limit exposure to environmental conditions (e.g. sealed plastic bags) should be used for all materials.
5. **Radiation** – Products should be protected from all sources of ionizing radiation.
6. **Deformation** – The rubber items should be stored in a relaxed position, without tension or compression. Laying the product on a flat surface and preventing its suspension or crushing keeps it from deforming and minimizes deformation.
7. **Contact with liquid or semi-liquid materials** – Rubber should not come in to contact with liquid or semi-liquid materials or their vapours at any time during storage, unless these materials are an integral part of the product or the manufacture's packaging.
8. **Contact with Metals** - Metals such as manganese, iron and copper, or copper alloys can have a harmful effect on rubber. A layer of paper, polyethylene or cellophane will keep these separated.
9. **Contact with Non-Metals** - Contact with other rubbers should be avoided.
10. **Stock Rotation** - Elastomers should be stored for as short a period as possible, and practice the First In First Out (FIFO system) stock liquidation.
11. **Cleaning** - Organic solvents such as trichloroethylene, carbon tetrachloride and petroleum are the most harmful agents. Soap and water and methylated spirits are the least harmful, and all parts should be dried at room temperature before use.
12. **Shelf Life** - The table shows the storage life of seal components made from the more common materials under ideal conditions. Storing under less than ideal conditions will reduce the life of the component.

Careful inspection for the following should be made before installation after storage:

- Cracks or Surface crazing
- Permanent distortion
- Mechanical damage
- Surface softening or hardening

Rubber / Elastomer	Max Code	Primary storage period (Years)	Extension of storage period after visual re-inspection (Years)
Nitrile Butadiene Rubber (NBR)	NT	7	3
Ethylene Propylene (EPDM)	EP	10	5
Fluorocarbon (FKM)	VT	10	5
Vinyl-Methyl-Silicon (VMQ)	SL	10	5
Polyurethane (PU)	PU	5	2
Engineering Thermoplastics:			
Acetal (POM)	ACT		
Polyamide (PA)	NY	Unlimited	-
Polytetrafluoroethylene (PTFE)	PFT		

Guidelines of ISO 2230

PISTON SEALS

MAX SPARE LIMITED
QUALITY. PRECISION. SPEED.

MAX TYPE	PRODUCT NAME	SEAL PROFILE	APPLICATION	PRESSURE (max) bar	TEMPERATURE	SPEED m/s	PAGE NO
P28	U SEAL		SINGLE ACTING	400	-30°C TO +100°C	0.5	31
P29	U SEAL		SINGLE ACTING	250	-30°C TO +100°C	0.5	43
P38	U SEAL		SINGLE ACTING	400	-30°C TO +100°C	0.5	45
P45	GLYD RING		DOUBLE ACTING	400	-30°C TO +100°C	10.0	47
P46	GLYD RING		DOUBLE ACTING	400	-30°C TO +100°C	10.0	55
P93	COMPACT SEAL		DOUBLE ACTING	400	-30°C TO +100°C	2.0	61
P58	COMPACT SEAL		DOUBLE ACTING	400	-30°C TO +100°C	0.5	63
P52	COMPACT SEAL		DOUBLE ACTING	400	-30°C TO +100°C	0.5	67
P66	COMPACT SEAL		DOUBLE ACTING	500	-30°C TO +100°C	0.5	73
P60	COMPACT SEAL		DOUBLE ACTING	500	-30°C TO +100°C	1.5	77
P65	COMPACT SEAL		DOUBLE ACTING	350	-30°C TO +100°C	0.5	81
P69	COMPACT SEAL		DOUBLE ACTING	700	-30°C TO +100°C	0.5	85
P72	COMPACT SEAL		DOUBLE ACTING	400	-30°C TO +100°C	0.5	87
P76	COMPACT SEAL		DOUBLE ACTING	400	-30°C TO +100°C	1.0	91
P02	CUP SEAL		SINGLE ACTING	250	-30°C TO +100°C	0.5	93
P42	U SEAL		SINGLE ACTING	400	-30°C TO +100°C	0.5	99
P43	U SEAL		SINGLE ACTING	400	-30°C TO +100°C	0.5	105

Other materials are available on request.

P28

Single Acting Piston Seal

DETAILS

P28 is an asymmetrical piston seal for general purpose and has good overall performance. Due to typical piston sealing design having a shorter external lip, it allows pressure to act into the groove ensuring a maximum lip contact with the bore in pressurised conditions. It is a seal suited for split piston but can also be used with a single piston if made in NBR. P28 seal is available in polyurethane material also. Due to excellent wear resistance properties of polyurethane, the life expected is 3 times than that of NBR.

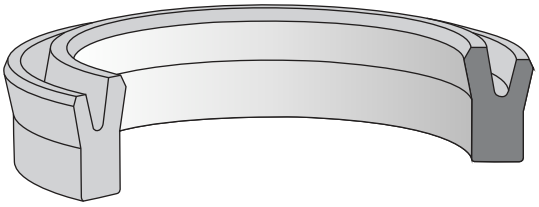

COMPATIBILITY

Mineral oils, bio oils, water soluble & water glycol fluids.

MATERIAL

Polyurethane 92 Shore A
Nitrile Rubber 85/90 Shore A

APPLICATION

- Light to medium duty hydraulic cylinders.
- Also suitable for double acting cylinders.
- Can also be used in an equivalent of SUA piston seal.

OPERATING CONDITIONS

Temperature Range	:	-30°C to + 100°C
Pressure	:	400 Bar (PU)
	:	150 Bar (NBR)
Speed	:	1.0 m/s (PU)
	:	0.5 m/s (NBR)

FEATURES

- Good purpose seal.
- Good overall performance.
- Very good static and dynamic tightness.
- Robust design.
- Any size up to 3000 mm dia. available on request.

SURFACE ROUGHNESS

Static : 1.6 µmRa
Dynamic : 0.4 µmRa

INSTALLATION & ASSEMBLY

P28 piston seals are easily assembled in to closed grooves. The assembly tool must be soft and have no sharp edges. The seal must be properly lubricated before installation.

PERMISSIBLE EXTRUSION GAP

PU	E Max (mm)
150 Bar	0.40
250 Bar	0.30
400 Bar	0.20

NBR	E Max (mm)
50 Bar	0.30
100 Bar	0.20
150 Bar	0.15

P28

Single Acting Piston Seal

MAX SPARE LIMITED
QUALITY. PRECISION. SPEED.

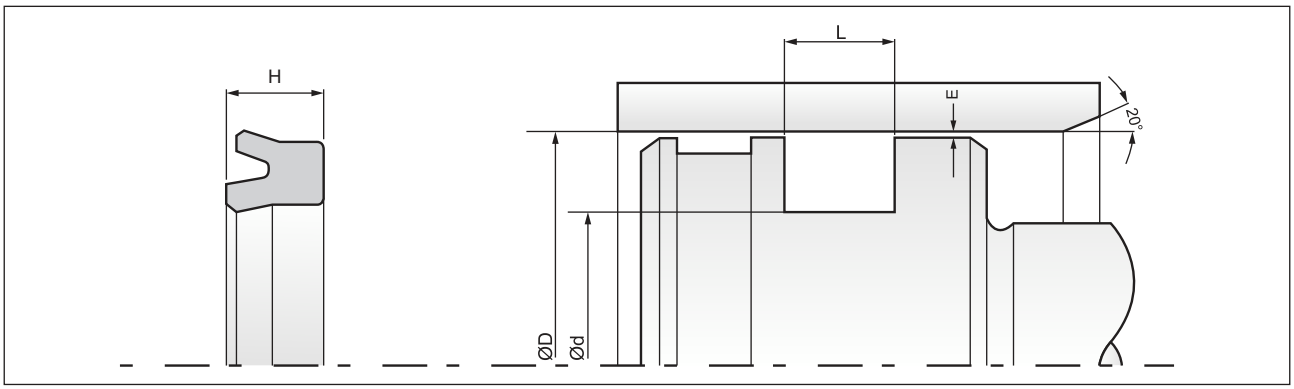

Part No.	D (H9)	d (h11)	L (+0.2)	H	Material	Mould No.
P280046601	8.00	4.50	2.70	2.20	FKM	SUA-2434
P280046401	8.00	4.50	2.70	2.20	FKM	SUA-1139
P280040701	8.00	4.60	3.50	3.00	NBR	SUA-2424
P28004T501	8.00	4.80	3.50	3.00	EPDM	SUA-1501
P280051001	8.00	5.00	4.00	3.50	NBR	SUA-1078
P28004D501	8.20	4.70	5.50	5.00	HNBR	SUA-2488
P28004S801	8.75	4.41	2.57	2.07	NBR	SUA-2433
P280040803	9.00	4.20	4.50	4.00	NBR	SUA-1259
P28005L501	10.00	5.00	7.00	6.50	PU	PUA-332
P280044301	10.30	4.70	4.40	3.90	VMQ	SUA-1059
P28007L501	11.00	7.00	3.50	3.00	PU	PUA-289
P280083201	11.00	8.00	3.50	3.00	EPDM	SUA-1986
P280036701	11.40	3.10	6.80	6.30	FKM	SUA-1661
P28005L502	12.00	5.00	6.00	5.50	PU	PUA-449
P280051101	12.00	5.00	7.70	7.20	NBR	SUA-927
P280061104	12.00	6.00	5.00	4.50	NBR	SUA-1382
P280076401	12.00	7.00	3.00	2.50	FKM	SUA-925
P280071101	12.00	7.00	3.05	2.55	NBR	SUA-1830
P280071102	12.00	7.00	4.50	4.00	NBR	SUA-2081
P280071001	12.00	7.00		3.50	NBR	SUA-1641
P280076701	12.00	7.20	2.70	2.20	FKM	SUA-1463
P28009CF01	12.40	9.50	3.50	3.00	PU	PUA-808
P280061107	12.70	6.35	5.24	4.74	NBR	SUA-2158
P280061103	13.00	6.00	5.10	4.60	NBR	SUA-1220
P28010L504	13.00	10.00	2.40	1.90	PU	PUA-592
P280101003	13.50	10.00	2.70	2.20	NBR	SUA-1542
P280101101	13.60	10.00	2.80	2.30	NBR	SUA-985
P280081102	13.80	8.60	3.30	2.80	NBR	SUA-1829
P28006T901	14.00	6.00	4.50	4.00	FKM	SUA-2280
P280061102	14.00	6.00	6.00	5.50	NBR	SUA-959
P280081001	14.00	8.00	3.00	2.50	NBR	SUA-1179
P280101001	14.50	10.00	3.50	3.00	NBR	SUA-777
P280060802	15.00	6.00	6.10	5.60	NBR	SUA-1277
P280090901	15.00	9.00	3.05	2.55	NBR	SUA-1033
P280095901	15.00	9.00	10.00	9.00	PU	PUA-668
P280100804	15.00	10.00	4.70	4.20	NBR	SUA-1276
P280111001	15.00	11.00	3.70	3.20	NBR	SUA-1474
P280111001	15.00	11.00	3.70	3.20	NBR	SUA-1337
P280090805	15.06	9.52	5.30	4.80	NBR	SUA-1399
P280110901	15.08	11.11	3.00	2.50	NBR	SUA-1389
P280070806	15.87	7.93	4.90	4.40	NBR	SUA-1255
P280070807	15.87	7.93	5.00	4.50	NBR	SUA-1274
P280070805	15.87	7.93	5.70	5.20	NBR	SUA-1254
P280090803	15.87	9.52	5.50	5.00	NBR	SUA-1271
P280093401	15.87	9.52	7.62	7.12	EPDM	SUA-908
P280090804	15.87	9.92	4.30	3.80	NBR	SUA-1275
P28006L501	16.00	6.00	9.00	8.00	PU	PUA-470
P280085902	16.00	8.00	6.30	5.80	PU	PUA-507
P280086601	16.00	8.00	7.50	7.00	FKM	SUA-2048
P280106602	16.00	10.00	3.00	2.50	FKM	SUA-1448
P280101002	16.00	10.00	3.00	2.50	NBR	SUA-1318
P280101102	16.00	10.00	3.05	2.55	NBR	SUA-1831

Part No.	D (H9)	d (h11)	L (+0.2)	H	Material	Mould No.
P28010L502	16.00	10.00	5.00	4.50	PU	PUA-392
P28010L502	16.00	10.00	5.00	4.50	PU	PUA-422
P28010R301	16.00	10.00	6.10	5.60	PU	PUA-483
P28010L503	16.00	10.00	6.50	6.00	PU	PUA-413
P280111003	16.00	11.00	3.50	3.00	NBR	SUA-2062
P280111103	16.00	11.00	4.50	4.00	NBR	SUA-850
P280106603	16.50	10.00	7.00	6.50	FKM	SUA-2226
P280071002	16.66	7.14	5.70	5.20	NBR	SUA-1944
P280091101	17.50	9.80	6.50	6.00	NBR	SUA-2186
P28008L502	18.00	8.00	8.50	7.50	PU	PUA-759
P280106701	18.00	10.50	3.70	3.20	FKM	SUA-1464
P280110701	18.00	11.00	5.50	5.00	NBR	SUA-773
P280090802	19.00	9.00	7.00	6.50	NBR	SUA-1266
P280120806	19.00	12.00	5.30	4.80	NBR	SUA-1282
P280131101	19.00	13.00	4.90	4.40	NBR	SUA-1003
P280130801	19.00	13.00	4.90	4.40	NBR	SUA-1672
P280080804	19.05	8.33	6.80	6.30	NBR	SUA-1280
P280090702	19.05	9.52	5.70	5.20	NBR	SUA-1260
P280120902	19.05	12.70	7.00	6.50	NBR	SUA-1261
P280103401	20.00	10.00	7.30	6.80	EPDM	SUA-837
P280121002	20.00	12.00	5.50	5.00	NBR	SUA-1157
P280124601	20.00	12.00	6.50	6.00	VMQ	SUA-1813
P28012L501	20.00	12.00	7.00	6.50	PU	PUA-296
P28012L503	20.00	12.00	9.00	8.00	PU	PUA-414
P280140801	20.00	14.00	2.90	2.40	NBR	SUA-1369
P280141102	20.00	14.00	2.95	2.45	NBR	SUA-941
P280148901	20.00	14.00	3.00	2.50	PU	PUA-402
P280141103	20.00	14.00	3.00	2.50	NBR	SUA-1080
P28014L502	20.00	14.00	4.50	4.00	PU	PUA-732
P280146601	20.00	14.00	5.50	5.00	FKM	SUA-855
P280146602	20.00	14.00	7.50	7.00	FKM	SUA-2075
P280155903	20.00	15.00	4.50	4.00	PU	PUA-915
P280156602	20.00	15.00	7.50	7.00	FKM	SUA-2204
P280111002	20.24	11.11	6.00	5.55	NBR	SUA-1539
P280121003	20.62	12.26	4.46	3.96	NBR	SUA-1477
P280080803	20.63	8.33	7.80	7.33	NBR	SUA-1264
P280131002	20.63	13.09	6.20	5.70	NBR	SUA-1263
P280140803	20.63	14.28	4.70	4.20	NBR	SUA-1281
P280120801	21.45	12.06	6.50	6.09	NBR	SUA-1540
P280126601	22.00	12.00	6.00	5.50	FKM	SUA-1120
P28012L504	22.00	12.00	9.00	8.00	PU	PUA-493
P28014L503	22.00	14.00	5.50	5.00	PU	PUA-908
P280141101	22.00	14.00	6.00	5.50	NBR	SUA-261
P280146701	22.00	14.00	6.00	5.50	FKM	SUA-1155
P28014L501	22.00	14.00	6.50	6.00	PU	PUA-578
P28014U201	22.00	14.00	7.00	6.50	FKM	SUA-1773
P280161002	22.00	16.00	3.00	2.50	NBR	SUB-2597
P280100802	22.22	10.31	7.50	7.00	NBR	SUA-1257
P280100803	22.22	10.31	7.90	7.40	NBR	SUA-1279
P280110805	22.22	11.11	7.20	6.70	NBR	SUA-1262
P280120803	22.22	12.70	6.50	5.90	NBR	SUA-1270
P280130805	22.22	13.10	6.50	5.90	NBR	SUA-1258

Bold sizes are readily available in stock.
Other materials are available on request.

P28

Single Acting Piston Seal

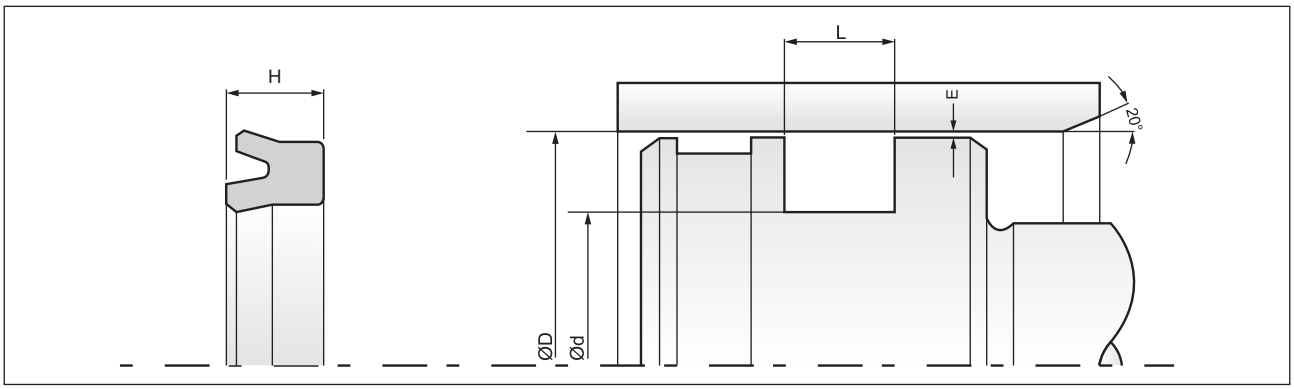

Part No.	D (H9)	d (h11)	L (+0.2)	H	Material	Mould No.
P280160802	22.22	16.27	5.70	5.20	NBR	SUA-1278
P280110806	23.41	11.90	7.30	6.80	NBR	SUA-1430
P280150801	23.79	15.87	6.30	5.80	NBR	SUA-1431
P280120805	23.81	12.70	7.90	7.40	NBR	SUA-1283
P280130604	23.81	13.89	5.80	5.30	NBR	SUA-1284
P280140802	23.81	14.28	6.50	6.10	NBR	SUA-1285
P280161001	24.00	16.00	3.00	2.50	NBR	SUA-1511
P28016C601	24.00	16.00	5.50	5.00	FKM	SUA-2426
P280166601	24.00	16.00	6.00	5.40	FKM	SUA-1224
P280161102	24.00	16.00	6.00	5.50	NBR	SUA-832
P280171102	24.00	17.00	5.70	5.20	NBR	SUA-845
P280171003	24.00	17.00	6.50	6.00	NBR	SUA-2422
P280181201	24.50	18.00	5.00	4.50	NBR	SUA-1476
P28018L501	24.50	18.00	7.50	7.00	PU	PUA-325
P28012L505	25.00	12.00	11.00	10.00	PU	PUA-904
P280126602	25.00	12.50	9.00	8.00	FKM	SUA-1634
P280151001	25.00	15.00	6.50	6.00	NBR	SUA-1169
P280151002	25.00	15.00	7.50	7.00	NBR	SUA-1733
P280156601	25.00	15.00	7.50	7.00	FKM	SUA-2014
P280166602	25.00	16.00	7.80	7.30	FKM	SUA-2223
P280161103	25.00	16.00	10.00	9.00	NBR	SUA-1415
P280171001	25.00	17.00	5.50	5.00	NBR	SUA-1963
P280171002	25.00	17.00	5.50	5.15	NBR	SUA-1970
P280176701	25.00	17.00	6.00	5.50	FKM	SUA-1328
P280186601	25.00	18.20	3.80	3.30	FKM	SUA-1686
P280191102	25.00	19.00	3.75	3.25	NBR	SUA-1194
P28019L502	25.00	19.00	3.80	3.30	PU	PUA-584
P280120804	25.40	12.70	7.50	6.90	NBR	SUB-2209
P28012L502	25.40	12.73	5.70	5.25	PU	PUB-685
P280128701	25.40	12.73	5.70	5.25	PU	PUB-686
P28019L503	25.40	19.05	3.80	3.30	PU	PUB-688
P280091001	26.00	9.50	9.00	8.00	NBR	SUB-2702
P280191101	27.50	19.50	9.00	8.00	NBR	SUB-1930
P28019L501	28.00	19.00	7.00	6.50	PU	PUB-626
P280200901	28.00	20.00	5.70	5.20	NBR	SUB-3639
P280201101	28.00	20.00	6.00	5.50	NBR	SUB-2450
P28020L502	28.00	20.00	6.20	5.70	PU	PUB-1888
P280226601	28.00	22.00	3.60	3.10	FKM	SUB-2099
P280226602	28.00	22.00	3.60	3.10	FKM	SUB-4068
P280130603	28.57	13.49	7.80	7.30	NBR	SUB-2205
P280150602	28.57	15.87	6.24	5.74	NBR	SUB-2189
P280150802	28.57	15.87	7.50	6.90	NBR	SUB-2207
P280150701	28.57	15.87	9.90	8.90	NBR	SUB-2206
P280170703	28.57	17.85	7.30	6.80	NBR	SUB-2210
P280191002	28.57	19.05	6.25	5.75	NBR	SUB-2188
P28019Q201	29.00	19.00	6.50	6.00	PU	PUB-988
P280181102	29.71	18.61	6.00	5.55	NBR	SUB-1552
P28010L501	30.00	10.00	11.00	10.00	PU	PUB-612
P280181103	30.00	18.60	7.90	7.40	NBR	SUB-1655
P280201102	30.00	20.00	6.50	6.00	NBR	SUB-1238
P280201103	30.00	20.00	7.00	6.50	NBR	SUB-2142
P280206601	30.00	20.00	7.50	7.00	FKM	SUB-3638

Part No.	D (H9)	d (h11)	L (+0.2)	H	Material	Mould No.
P280206602	30.00	20.00	9.00	8.00	FKM	SUB-3648
P28022L502	30.00	22.00	3.95	3.45	PU	PUB-648
P280221101	30.00	22.00	6.00	5.50	NBR	SUB-412
P28022L504	30.00	22.00	6.85	6.35	PU	PUB-1066
P28022L505	30.00	22.40	4.20	3.70	PU	PUB-1268
P28022L506	30.00	22.40	6.20	5.70	PU	PUB-1265
P280221103	30.00	22.50	5.30	4.80	NBR	SUB-3475
P280235902	30.00	23.50	5.00	4.50	PU	PUB-1267
P28024V201	30.00	24.00	3.70	3.20	NBR	SUB-3909
P28024L502	30.00	24.00	4.50	4.00	PU	PUB-1266
P280244501	30.00	24.00	5.00	4.50	VMQ	SUB-3242
P280241104	30.00	24.00	6.50	6.00	NBR	SUB-3533
P28021L401	30.50	21.24	7.00	6.48	PU	PUB-1792
P280196601	31.00	19.50	7.80	7.30	FKM	SUB-3441
P280231001	31.00	23.00	5.80	5.30	NBR	SUB-2849
P280170702	31.75	17.46	11.50	7.5/10.50	NBR	SUB-2208
P280191001	31.75	19.87	8.93	7.93	NBR	SUB-2392
P28022L503	32.00	22.00	6.50	6.00	PU	PUB-950
P280221003	32.00	22.00	7.50	7.00	NBR	SUB-2944
P28022L507	32.00	22.00	11.00	10.00	PU	PUB-1424
P280231102	32.00	23.80	6.50	6.00	NBR	SUB-1741
P280241001	32.00	24.00	3.70	3.20	NBR	SUB-2249
P280241105	32.00	24.00	3.75	3.25	NBR	SUB-3616
P28024S401	32.00	24.00	6.00	5.50	HNBR	SUB-2087
P280241101	32.00	24.00	6.00	5.50	NBR	SUB-2475
P280240901	32.00	24.00	6.10	5.60	NBR	SUB-2615
P280241102	32.00	24.00	6.50	6.00	NBR	SUB-2231
P280244502	32.00	24.00	6.50	6.00	VMQ	SUB-4075
P280246604	32.00	24.00	6.90	6.40	FKM	SUB-2897
P280246601	32.00	24.00	7.50	7.00	FKM	SUB-2053
P280246603	32.00	24.40	6.00	5.50	FKM	SUB-2174
P280250902	32.00	25.00	7.00	6.50	NBR	SUB-2668
P28026L501	32.00	26.00	6.00	5.50	PU	PUB-807
P28025Q201	33.00	25.00	5.00	4.50	PU	PUB-1328
P28025L507	33.00	25.00	6.20	5.70	PU	PUB-1889
P28024L501	33.33	24.60	9.50	8.50	PU	PUB-1073
P280256601	33.33	25.40	5.80	5.30	FKM	SUB-4033
P280230801	34.00	23.00	7.00	6.50	NBR	SUB-2368
P28028L501	34.00	28.00	5.80	5.30	PU	PUB-642
P28020L501	35.00	20.00	11.00	10.00	PU	PUB-1270
P280220801	35.00	22.40	9.60	8.60	NBR	SUB-2338
P280251001	35.00	25.00	7.00	6.50	NBR	SUB-2079
P280251107	35.00	25.00	7.50	7.00	NBR	SUB-2452
P280251110	35.00	25.00	9.00	8.00	NBR	SUB-3398
P28025L503	35.00	25.00	9.00	8.00	PU	PUB-1096
P28025U401	35.00	25.00	9.00	8.00	EPDM	SUB-3380
P280276602	35.00	27.00	3.70	3.20	FKM	SUB-2365
P28027L503	35.00	27.00	5.50	5.00	PU	PUB-1304
P28027L502	35.00	27.00	9.00	8.00	PU	PUB-917
P280241103	36.00	24.00	10.00	9.00	NBR	SUB-2557
P280251002	36.00	25.00	5.50	5.00	NBR	SUB-2228
P280260801	36.00	26.00	6.90	6.40	NBR	SUB-1598

Bold sizes are readily available in stock.
Other materials are available on request.

P28

Single Acting Piston Seal

MAX SPARE LIMITED
QUALITY. PRECISION. SPEED.

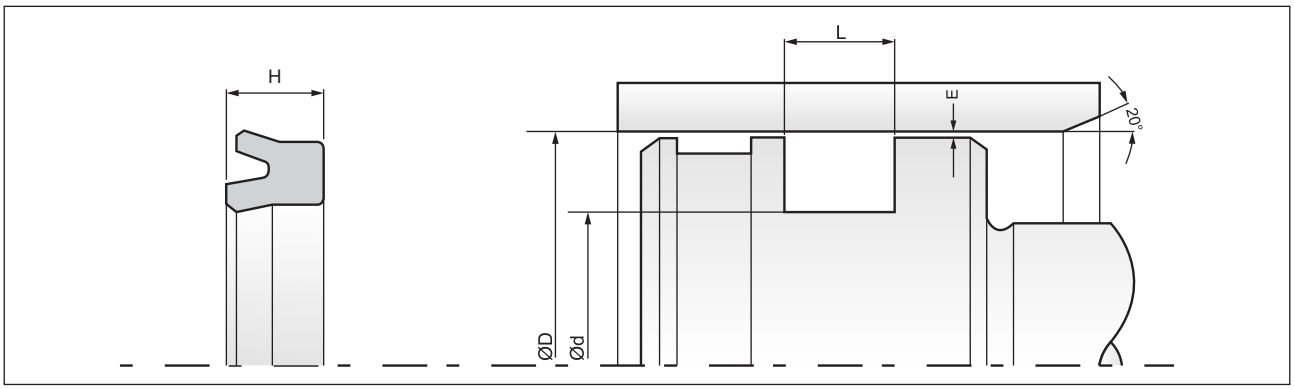

Part No.	D (H9)	d (h11)	L (+0.2)	H	Material	Mould No.
P28028L506	36.00	28.00	7.00	6.50	PU	PUB-1638
P280251111	36.43	25.65	6.50	5.90	NBR	SUB-3713
P280261101	36.51	26.99	6.85	6.35	NBR	SUB-2413
P280201003	37.00	20.00	12.50	11.50	NBR	SUB-3615
P280291103	37.00	29.00	6.00	5.50	NBR	SUB-3443
P280226801	37.59	22.11	9.89	8.89	FKM	SUB-3910
P280251108	38.00	25.00	7.20	6.70	NBR	SUB-2591
P280251003	38.00	25.00	10.00	9.00	NBR	SUB-3132
P280251003	38.00	25.00	10.00	9.00	NYLON	PFB-1069
P280281105	38.00	28.00	5.50	5.00	NBR	SUB-4074
P28030L511	38.00	30.00	5.00	4.50	PU	PUB-1887
P28030L512	38.00	30.00	6.20	5.70	PU	PUB-1891
P280301002	38.00	30.00	6.50	6.00	NBR	SUB-2465
P280306501	38.00	30.00	6.50	6.00	FKM	SUB-1429
P28030L505	38.00	30.00	7.00	6.50	PU	PUB-529
P28031L502	38.00	31.00	4.70	4.20	PU	PUB-540
P280315902	38.00	31.00	5.20	4.70	PU	PUB-1795
P28032L506	38.00	32.00	7.00	6.50	PU	PUB-1181
P280251102	38.10	25.40	6.85	6.35	NBR	SUB-414
P28030C301	38.10	30.16	4.46	3.96	XNBR	SUB-1786
P280286601	38.50	28.00	7.80	7.30	FKM	SUB-3630
P280251106	39.00	25.00	7.50	7.00	NBR	SUB-1576
P280260802	39.62	26.41	6.50	6.09	NBR	SUB-2494
P28025L502	40.00	25.00	11.00	10.00	PU	PUB-630
P280251109	40.00	25.00	11.00	10.00	NBR	SUB-3295
P280251105	40.00	25.50	10.50	9.50	NBR	SUB-2726
P28025L505	40.00	25.50	10.50	9.50	PU	PUB-1438
P280271101	40.00	27.00	9.00	8.00	NBR	SUB-1742
P28027L501	40.00	27.00	10.00	9.00	PU	PUB-562
P280281104	40.00	28.00	7.50	7.00	NBR	SUB-1717
P280280801	40.00	28.00	10.00	9.00	NBR	SUB-1464
P280285904	40.00	28.00	11.00	10.00	PU	PUB-382
P280301105	40.00	30.00	5.50	5.00	NBR	SUB-2695
P28030L507	40.00	30.00	5.50	5.00	PU	PUB-1263
P28030L506	40.00	30.00	6.50	6.00	PU	PUB-837
P280308901	40.00	30.00	6.50	6.00	PU	PUB-972
P280306603	40.00	30.00	6.50	6.00	FKM	SUB-3403
P28030L502	40.00	30.00	7.00	6.50	PU	PUB-512
P280301102	40.00	30.00	7.00	6.50	NBR	SUB-1633
P280301103	40.00	30.00	7.10	6.60	NBR	SUB-2140
P280306602	40.00	30.00	7.30	6.80	FKM	SUB-2145
P280300501	40.00	30.00	7.50	7.00	NBR	SUB-3022
P280301003	40.00	30.00	7.50	7.00	NBR	SUB-2819
P28030L510	40.00	30.00	7.50	7.00	PU	PUB-1640
P28030S401	40.00	30.00	7.50	7.00	HNBR	SUB-3092
P28030L504	40.00	30.00	8.50	7.50	PU	PUB-527
P280306702	40.00	30.00	9.00	8.00	FKM	SUB-106
P28030L503	40.00	30.00	11.00	10.00	PU	PUB-519
P280301104	40.00	30.00	11.00	10.00	NBR	SUB-2504
P280310901	40.00	31.00	9.00	8.00	NBR	SUB-4216
P280321003	40.00	32.00	3.80	3.30	NBR	SUB-2451
P28032L502	40.00	32.00	5.50	5.00	PU	PUB-1027

Part No.	D (H9)	d (h11)	L (+0.2)	H	Material	Mould No.
P28032L507	40.00	32.00	6.10	5.60	PU	PUB-1583
P28032L501	40.00	32.00	6.20	5.70	PU	PUB-657
P28032L505	40.00	32.00	6.30	5.80	PU	PUB-1173
P280321002	40.00	32.00	7.50	7.00	NBR	SUB-2943
P28032L504	40.00	32.00	9.00	8.00	PU	PUB-1119
P28032L508	40.00	32.00	11.00	10.00	PU	PUB-1609
P280321105	40.00	32.00	11.00	10.00	NBR	SUB-3986
P280331001	40.00	33.00	6.50	6.00	NBR	SUB-1721
P28033L501	40.00	33.00	9.00	8.00	PU	PUB-796
P280336601	40.00	33.00	9.00	8.00	FKM	SUB-1700
P28029L401	40.90	28.90	6.80	6.30	PU	PUB-1791
P280261104	41.00	26.00	9.40	8.40	NBR	SUB-4008
P280318701	41.27	31.75	8.80	7.80	PU	PUB-1536
P280261001	42.00	26.00	10.50	9.50	NBR	SUB-2441
P28028L507	42.00	28.00	7.50	7.00	PU	PUB-1798
P28032L503	42.00	32.00	6.50	6.00	PU	PUB-1028
P280321104	42.00	32.00	7.50	7.00	NBR	SUB-3689
P280321103	42.00	32.00	11.00	10.00	NBR	SUB-2505
P280340901	42.00	34.00	6.50	6.00	NBR	SUB-1475
P280306604	43.00	30.00	7.50	7.00	FKM	SUB-3849
P280341001	43.00	34.50	3.30	2.80	NBR	SUB-1525
P28028L502	44.00	28.00	5.80	5.30	PU	PUB-643
P280291101	44.00	29.00	12.00	11.00	NBR	SUB-1820
P28032S901	44.00	32.00	6.00	5.50	VMQ	SUB-3992
P280326601	44.00	32.00	7.00	6.50	FKM	SUB-2125
P280341101	44.00	34.00	13.00	12.00	NBR	SUB-2052
P28035L501	44.00	35.00	9.00	8.00	PU	PUB-602
P280383001	44.00	38.00	4.50	4.00	EPDM	SUB-2321
P280381002	44.45	38.10	4.47	3.97	NBR	SUB-1630
P280313401	44.50	31.00	12.50	11.50	EPDM	SUB-3776
P28031L503	44.50	31.50	7.50	7.00	PU	PUB-1512
P28020L503	45.00	20.00	11.00	10.00	PU	PUB-1969
P280261103	45.00	26.00	10.00	9.00	NBR	SUB-2419
P28028L503	45.00	28.00	13.00	12.00	PU	PUB-659
P28028L505	45.00	28.50	13.00	12.00	PU	PUB-1708
P280291102	45.00	29.00	13.00	12.00	NBR	SUB-1919
P28030L509	45.00	30.00	12.00	11.00	PU	PUB-1639
P280321001	45.00	32.00	7.00	6.50	NBR	SUB-2255
P280351106	45.00	35.00	3.70	3.20	NBR	SUB-2148
P280351001	45.00	35.00	6.00	5.40	NBR	SUB-2272
P28035L503	45.00	35.00	6.50	6.00	PU	PUB-838
P280351002	45.00	35.00	6.50	6.00	NBR	SUB-3878
P280356701	45.00	35.00	6.50	6.00	FKM	SUB-4030
P280351002	45.00	35.00	7.50	7.00	NBR	SUB-3313
P280351104	45.00	35.00	7.50	7.00	NBR	SUB-1789
P28035L505	45.00	35.00	11.00	10.00	PU	PUB-1029
P28035L507	45.00	35.00	12.00	11.00	PU	PUB-1641
P280371101	45.00	37.00	3.80	3.30	NBR	SUB-2458
P28037L501	45.00	37.00	10.00	9.00	PU	PUB-702
P280343301	45.05	34.29	9.38	8.38	EPDM	SUB-2967
P280343301	45.05	34.29	9.38	8.38	EPDM	SUB-3008
P280366601	46.00	36.00	7.30	6.80	FKM	SUB-2147

Bold sizes are readily available in stock.
Other materials are available on request.

P28

Single Acting Piston Seal

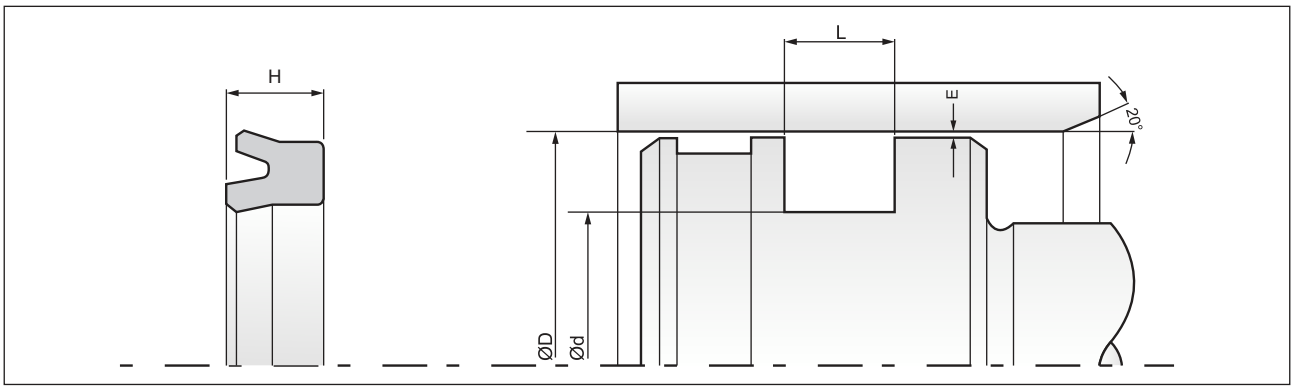

Part No.	D (H9)	d (h11)	L (+0.2)	H	Material	Mould No.
P280381104	46.00	38.00	6.50	6.00	NBR	SUB-3619
P280366602	46.43	36.11	7.30	6.80	FKM	SUB-4032
P280351105	47.00	35.00	9.00	8.00	NBR	SUB-2096
P280351003	47.56	35.56	6.50	6.00	NBR	SUB-3983
P280381103	48.00	38.00	7.50	7.00	NBR	SUB-3486
P280380801	48.00	38.00	9.00	8.00	NBR	SUB-1507
P28038L501	48.00	38.00	10.00	9.00	PU	PUB-839
P28040L517	48.00	40.00	6.20	5.70	PU	PUB-1890
P28040L513	48.00	40.00	6.50	6.00	PU	PUB-1642
P280401107	48.00	40.00	6.50	6.00	NBR	SUB-2506
P280406610	48.00	40.00	10.70	9.70	FKM	SUB-3908
P280321106	48.80	32.80	13.00	12.00	NBR	SUB-3995
P280351107	49.00	35.00	11.00	10.00	NBR	SUB-2434
P28036L501	49.00	36.00	9.00	8.00	PU	PUB-1419
P28030L501	50.00	30.00	13.00	12.00	PU	PUB-352
P280341103	50.00	34.00	13.00	12.00	NBR	SUB-3511
P28035L504	50.00	35.00	9.00	8.00	PU	PUB-974
P280351109	50.00	35.00	9.00	8.00	NBR	SUB-3293
P280351108	50.00	35.00	10.70	9.70	NBR	SUB-3296
P28035L502	50.00	35.00	11.00	10.00	PU	PUB-641
P280361101	50.00	36.00	11.00	10.00	NBR	SUB-2149
P280361001	50.00	36.00	11.00	10.00	NBR	SUB-2535
P280381102	50.00	38.00	6.50	6.00	NBR	SUB-1880
P280386601	50.00	38.00	7.00	6.50	FKM	SUB-2194
P280401108	50.00	40.00	5.50	5.00	NBR	SUB-2671
P280406605	50.00	40.00	6.00	5.50	FKM	SUB-2630
P28040L510	50.00	40.00	6.50	6.00	PU	PUB-840
P280406601	50.00	40.00	6.50	6.10	FKM	SUB-1749
P280400801	50.00	40.00	7.00	6.50	NBR	SUB-1634
P28040L507	50.00	40.00	7.00	6.50	PU	PUB-941
P280401110	50.00	40.00	7.00	6.50	NBR	SUB-3423
P280406606	50.00	40.00	7.30	6.80	FKM	SUB-2658
P280406602	50.00	40.00	7.50	7.00	FKM	SUB-2341
P280401101	50.00	40.00	7.50	7.00	NBR	SUB-3257
P28040L503	50.00	40.00	7.50	7.00	PU	PUB-209
P280408702	50.00	40.00	7.70	7.20	PU	PUB-1564
P280403402	50.00	40.00	7.80	7.30	EPDM	SUB-2740
P28040R301	50.00	40.00	8.80	7.80	PU	PUB-1048
P280406607	50.00	40.00	9.00	8.00	FKM	SUB-2924
P28040L514	50.00	40.00	9.00	8.00	PU	PUB-1643
P280401102	50.00	40.00	9.50	8.50	NBR	SUB-1569
P28040L508	50.00	40.00	10.00	9.00	PU	PUB-1030
P280406701	50.00	40.00	11.00	10.00	FKM	SUB-2524
P28040L501	50.00	40.00	11.00	10.00	PU	PUB-544
P280406608	50.00	40.00	11.70	10.70	FKM	SUB-3190
P280406608	50.00	40.00	11.70	10.70	FKM	SUB-3333
P28041L401	50.00	41.25	4.00	3.50	PU	PUB-1177
P280410801	50.00	41.27	7.20	6.77	NBR	SUB-2446
P280426601	50.00	42.00	3.70	3.20	FKM	SUB-1836
P280421103	50.00	42.00	3.75	3.25	NBR	SUB-1911
P280421001	50.00	42.00	3.75	3.25	NBR	SUB-1979
P280424501	50.00	42.00	7.50	7.00	VMQ	SUB-1715

Part No.	D (H9)	d (h11)	L (+0.2)	H	Material	Mould No.
P280421102	50.00	42.00	9.00	8.00	NBR	SUB-506
P28042L502	50.00	42.00	9.00	8.00	PU	PUB-915
P28042L503	50.00	42.00	12.00	11.00	PU	PUB-1203
P28034L501	50.80	34.80	10.00	9.00	PU	PUC-581
P280341102	50.80	34.93	8.93	7.93	NBR	SUC-1465
P280391101	50.80	39.69	10.52	9.52	NBR	SUC-1315
P280401106	50.80	40.49	5.50	5.16	NBR	SUC-1558
P280401104	50.80	40.49	7.64	7.14	NBR	SUC-1468
P28041C301	50.80	41.27	5.42	4.92	XNBR	SUC-1171
P280410301	50.80	41.27	5.42	4.92	XNBR	SUC-1186
P280411103	50.80	41.27	7.10	6.60	NBR	SUC-2712
P280411101	50.80	41.27	7.64	7.14	NBR	SUC-1134
P280411102	50.80	41.28	7.64	7.14	NBR	SUC-1271
P280386602	51.00	38.00	10.00	9.00	FKM	SUC-2192
P28041L501	51.00	41.00	7.50	7.00	PU	PUC-446
P280361002	52.00	36.00	10.30	9.30	NBR	SUC-1865
P280391001	52.00	39.00	10.30	9.30	NBR	SUC-1261
P280421104	52.00	42.00	13.00	12.00	NBR	SUC-1402
P28035L506	53.00	35.00	10.80	9.80	PU	PUC-845
P280411002	53.91	41.91	6.50	6.00	NBR	SUC-2671
P28038L502	53.97	38.10	6.85	6.35	PU	PUC-968
P28044L501	54.00	44.00	11.00	10.00	PU	PUC-432
P280461101	54.00	46.00	7.00	6.50	NBR	SUC-1260
P280461102	54.00	46.00	9.00	8.00	NBR	SUC-2544
P280456602	54.76	45.24	7.50	7.00	FKM	SUC-2714
P280406609	55.00	40.00	7.50	7.00	FKM	SUC-2287
P28040L509	55.00	40.00	11.00	10.00	PU	PUC-753
P28040L515	55.00	40.00	12.00	11.00	PU	PUC-1129
P280421003	55.00	42.00	6.80	6.30	NBR	SUC-1552
P280421004	55.00	42.00	10.00	9.00	NYLON	PFB-1068
P280421004	55.00	42.00	10.00	9.00	NBR	SUC-2143
P280421101	55.00	42.00	11.00	10.00	NBR	SUC-420
P28042L501	55.00	42.00	11.00	10.00	PU	PUC-536
P28045L502	55.00	45.00	6.50	6.00	PU	PUC-650
P28045L506	55.00	45.00	7.00	6.50	PU	PUC-804
P28045L509	55.00	45.00	7.50	7.00	PU	PUC-1034
P28045L511	55.00	45.00	7.80	7.30	PU	PUC-1335
P28045L503	55.00	45.00	9.00	8.00	PU	PUC-651
P28045L504	55.00	45.00	11.00	10.00	PU	PUC-752
P28047L502	55.00	47.00	6.20	5.70	PU	PUC-1238
P280476601	55.00	47.00	6.50	5.90	FKM	SUC-1497
P28039L401	56.21	39.11	11.00	10.00	PU	PUC-1267
P280501007	56.60	50.60	5.50	5.00	NBR	SUC-1961
P280401105	57.00	40.00	11.00	10.00	NBR	SUC-1529
P280413402	57.00	41.00	12.40	11.40	EPDM	SUC-2049
P280444501	57.00	44.30	6.85	6.35	VMQ	SUC-1179
P28071102	57.00	47.00	7.50	7.00	NBR	SUC-2234
P280411001	57.15	41.27	12.50	11.50	NBR	SUC-1164
P280431001	57.15	43.65	10.30	9.30	NBR	SUC-1968
P280446701	57.15	44.45	6.85	6.35	FKM	SUC-2389
P28044L502	57.15	44.45	11.60	10.60	PU	PUC-822
P28045L501	57.70	45.00	10.50	9.50	PU	PUC-429

Bold sizes are readily available in stock.
Other materials are available on request.

P28

Single Acting Piston Seal

MAX SPARE LIMITED
QUALITY. PRECISION. SPEED.

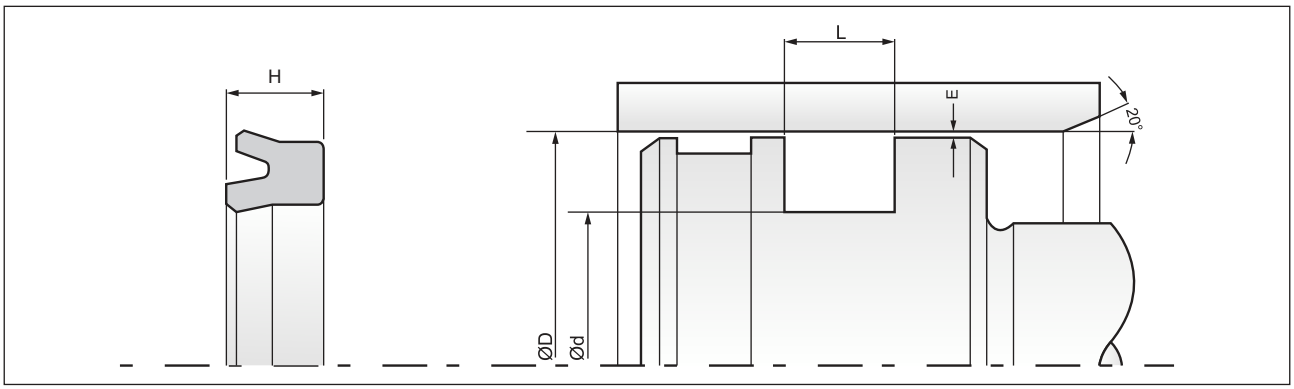

Part No.	D (H9)	d (h11)	L (+0.2)	H	Material	Mould No.
P28040L502	58.00	40.00	12.50	11.50	PU	PUC-459
P280451101	58.00	45.30	7.50	7.00	NBR	SUC-1149
P28046S801	58.00	46.00	7.80	7.30	NBR	SUC-2654
P280480801	58.00	48.00	6.50	6.00	NBR	SUC-107
P28050L513	58.00	50.00	6.50	6.00	PU	PUC-1130
P28048V401	58.24	48.99	7.50	7.01	NBR	SUC-1901
P28040L505	60.00	40.00	11.00	10.00	PU	PUC-657
P28040L516	60.00	40.00	15.00	14.00	PU	PUC-1128
P28045R301	60.00	45.00	11.00	10.00	PU	PUC-614
P28045L510	60.00	45.00	11.00	10.00	PU	PUC-1124
P28046L501	60.00	46.00	9.00	8.00	PU	PUC-831
P280471101	60.00	47.00	6.50	6.00	NBR	SUC-2207
P280470801	60.00	47.00	9.00	8.00	NBR	SUC-2112
P280481002	60.00	48.00	8.50	7.50	NBR	SUC-1160
P280481004	60.00	48.00	10.00	9.00	NBR	PUC-771
P280481103	60.00	48.00	10.00	9.00	NBR	SUC-2110
P28048L504	60.00	48.00	10.00	9.00	PU	PUC-1012
P280486604	60.00	48.00	15.00	14.00	FKM	SUC-2803
P28050L502	60.00	50.00	6.50	6.00	PU	PUC-652
P280501106	60.00	50.00	6.80	6.30	NBR	SUC-1503
P280506401	60.00	50.00	8.50	7.50	FKM	SUC-1739
P28050L512	60.00	50.00	9.00	8.00	PU	PUC-1122
P280506702	60.00	50.00	11.00	10.00	FKM	SUC-2658
P28050L511	60.00	50.00	12.00	11.00	PU	PUC-1123
P280504101	60.00	50.80	5.50	5.00	VMQ	SUC-2740
P28052L504	60.00	52.00	9.00	8.00	PU	PUC-1095
P280531101	60.00	53.00	7.50	7.00	NBR	SUC-1142
P280481005	60.26	48.26	6.50	6.00	NBR	SUC-2672
P280508901	62.00	50.00	12.00	11.00	PU	PUC-1098
P280508902	62.00	50.00	13.00	12.00	PU	PUC-1099
P280521102	62.00	52.00	7.50	7.00	NBR	SUC-570
P280526601	62.00	52.00	7.50	7.00	FKM	SUC-1937
P28043L501	63.00	43.00	14.00	13.00	PU	PUC-481
P28045L505	63.00	45.00	13.00	12.00	PU	PUC-754
P280456601	63.00	45.00	14.00	13.00	FKM	SUC-1858
P280471001	63.00	47.00	11.70	10.70	NBR	SUC-1577
P280486603	63.00	48.00	9.00	8.00	FKM	SUC-2499
P28048L505	63.00	48.00	9.50	8.50	PU	PUC-1314
P280483401	63.00	48.00	9.60	8.60	EPDM	SUC-1881
P280486601	63.00	48.00	10.00	9.00	FKM	SUC-1656
P28048L503	63.00	48.00	11.00	10.00	PU	PUC-1008
P280481102	63.00	48.00	13.00	12.00	NBR	SUC-2066
P28048L502	63.00	48.00	13.00	12.00	PU	PUC-925
P280486602	63.00	48.00	13.50	12.50	FKM	SUC-2430
P280506701	63.00	50.00	7.50	7.00	FKM	SUC-1444
P28050L503	63.00	50.00	9.00	8.00	PU	PUC-755
P280506603	63.00	50.00	9.00	8.00	FKM	SUC-2222
P280506602	63.00	50.00	14.00	13.00	FKM	SUC-1860
P280501110	63.00	50.00	14.00	13.00	NBR	SUC-2472
P28050L508	63.00	50.00	15.00	14.00	PU	PUC-1009
P28051L501	63.00	51.00	15.00	14.00	PU	PUC-987
P280516602	63.00	51.00	15.00	14.00	FKM	SUC-2583

Part No.	D (H9)	d (h11)	L (+0.2)	H	Material	Mould No.
P280516601	63.00	51.00	16.00	15.00	FKM	SUC-1511
P28052L501	63.00	52.00	7.00	6.50	PU	PUC-876
P280536401	63.00	53.00	4.75	4.25	FKM	SUC-1037
P280536606	63.00	53.00	4.75	4.25	FKM	SUC-1704
P28053L508	63.00	53.00	6.30	5.80	PU	PUC-1438
P280536605	63.00	53.00	6.50	6.00	FKM	SUC-1649
P28053L501	63.00	53.00	6.50	6.00	PU	PUC-654
P28053L505	63.00	53.00	6.80	6.30	PU	PUC-878
P280531109	63.00	53.00	6.80	6.30	NBR	SUC-2044
P280531110	63.00	53.00	6.80	6.30	NBR	SUC-2618
P28053X401	63.00	53.00	6.90	6.40	PU	PUC-862
P28053L504	63.00	53.00	7.00	6.50	PU	PUC-805
P280531002	63.00	53.00	7.00	6.50	NBR	SUC-2127
P280531001	63.00	53.00	7.50	6.90	NBR	SUC-1408
P280536601	63.00	53.00	7.50	7.00	FKM	SUC-1499
P280536701	63.00	53.00	7.50	7.00	FKM	SUC-1246
P28053L502	63.00	53.00	7.70	7.20	PU	PUC-676
P280533401	63.00	53.00	7.80	7.30	EPDM	SUC-1679
P280536602	63.00	53.00	9.00	8.00	FKM	SUC-1792
P28053L507	63.00	53.00	9.00	8.00	PU	PUC-1271
P28053L506	63.00	53.00	10.00	9.00	PU	PUC-1077
P280536702	63.00	53.00	12.00	11.00	FKM	SUC-1294
P28053L503	63.00	53.00	13.00	12.00	PU	PUC-772
P280531108	63.00	53.00	13.00	12.00	NBR	SUC-2790
P280531107	63.00	53.97	7.50	7.00	NBR	SUC-1337
P280536402	63.00	53.97	7.50	7.00	FKM	SUC-1378
P280551102	63.00	55.00	6.20	5.70	NBR	SUC-1161
P280551105	63.00	55.00	11.00	10.00	NBR	SUC-2473
P28050L501	63.50	50.80	8.94	7.94	PU	PUC-505
P280501006	63.50	50.80	10.30	9.30	NBR	SUC-1967
P280511103	63.50	51.00	10.00	9.00	NBR	SUC-2278
P28053C301	63.50	53.97	5.42	4.92	XNBR	SUC-1238
P280531111	63.50	53.97	7.10	6.60	NBR	SUC-2713
P280466601	64.00	46.00	9.00	8.00	FKM	SUC-2156
P28045L507	65.00	45.00	11.00	10.00	PU	PUC-869
P280491101	65.00	49.00	13.00	12.00	NBR	SUC-1247
P28050L504	65.00	50.00	11.00	10.00	PU	PUC-756
P280511102	65.00	51.00	9.50	8.50	NBR	SUC-1223
P280525903	65.00	52.00	11.00	10.00	PU	PUC-884
P28054L501	65.00	54.00	10.00	9.00	PU	PUC-479
P28055L501	65.00	55.00	6.50	6.00	PU	PUC-653
P28055L502	65.00	55.00	8.50	7.50	PU	PUC-757
P28055L503	65.00	55.00	9.00	8.00	PU	PUC-1127
P28055L504	65.00	55.00	14.50	13.50	PU	PUC-1252
P280565901	65.00	56.00	9.10	8.10	PU	PUC-1233
P28052L503	65.08	52.38	9.73	8.73	PU	PUC-1019
P280516701	66.00	51.00	12.30	11.30	FKM	SUC-2487
P280568701	66.00	56.00	11.00	10.00	PU	PUC-967
P28052L502	66.30	52.40	11.00	10.00	PU	PUC-909
P280521001	66.61	52.61	7.50	7.00	NBR	SUC-2673
P280508301	66.67	50.80	12.50	11.50/9.50	NBR/FABRIC	SUC-1077
P280511002	67.00	51.00	8.80	7.80	NBR	SUC-1553

Bold sizes are readily available in stock.
Other materials are available on request.

P28

Single Acting Piston Seal

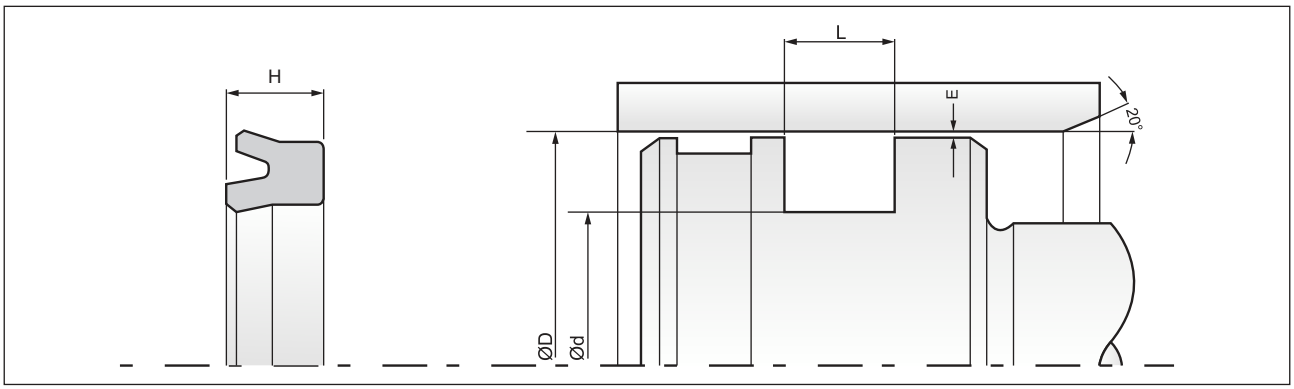

Part No.	D (H9)	d (h11)	L (+0.2)	H	Material	Mould No.
P280571101	67.00	57.00	7.50	7.00	NBR	SUC-2588
P280501009	68.00	50.00	12.60	9.60/11.60	NBR	SUC-2827
P280501108	69.85	50.80	13.70	12.70	NBR	SUC-1628
P280501005	69.85	50.80	13.70	12.70	NBR	SUC-1811
P280571001	69.85	57.13	10.30	9.30	NBR	SUC-1969
P28050L505	70.00	50.00	11.00	10.00	PU	PUC-758
P280502201	70.00	50.00	14.00	13.00	CR	SUC-1718
P28050L514	70.00	50.00	17.00	16.00	PU	PUC-1208
P280501008	70.00	50.90	13.70	12.70	NBR	SUC-2213
P280531102	70.00	53.70	8.50	7.50	NBR	SUC-1170
P280541102	70.00	54.00	9.00	8.00	NBR	SUC-1180
P280546701	70.00	54.00	10.00	9.00	FKM	SUC-1757
P280541103	70.00	54.00	13.00	12.00	NBR	SUC-2543
P280541101	70.00	54.00	14.00	13.00	NBR	SUC-1128
P28060L502	70.00	60.00	6.50	6.00	PU	PUC-655
P280608701	70.00	60.00	6.80	6.30	PU	PUC-705
P280600801	70.00	60.00	7.30	6.80	NBR	SUC-2082
P280606603	70.00	60.00	8.50	7.50	FKM	SUC-1671
P28060L503	70.00	60.00	9.00	8.00	PU	PUC-696
P28060L507	70.00	60.00	9.50	8.50	PU	PUC-975
P280604501	70.00	60.00	9.70	8.70	VMQ	SUC-1605
P280606604	70.00	60.00	10.50	9.50	FKM	SUC-2171
P28061L501	70.00	61.00	11.00	10.00	PU	PUC-1010
P28061L502	70.00	61.00	13.00	12.00	PU	PUC-1011
P28062L502	70.00	62.00	6.50	6.00	PU	PUC-1295
P28062L501	70.00	62.00	8.50	7.50	PU	PUC-480
P280551103	72.00	55.00	9.50	8.50	NBR	SUC-1380
P280481003	72.53	48.91	9.12	8.12	NBR	SUC-1705
P280606702	72.80	60.80	9.50	8.50	FKM	SUC-2619
P280581001	72.96	58.96	7.50	7.00	NBR	SUC-2674
P280644101	73.00	64.50	5.20	4.70	VMQ	SUC-2741
P28056L401	73.32	56.52	13.12	12.12	PU	PUC-1268
P28063L501	74.00	63.00	7.50	7.00	PU	PUC-499
P280551001	75.00	55.00	11.00	10.00	NBR	SUC-1443
P280603401	75.00	60.00	10.50	9/9.5	EPDM	SUC-1117
P28060L505	75.00	60.00	13.00	12.00	PU	PUC-759
P28065L502	75.00	65.00	6.50	6.00	PU	PUC-656
P28065L504	75.00	65.00	6.50	6.00	PU	PUC-816
P28065L501	75.00	65.00	9.00	8.00	PU	PUC-457
P280658701	75.00	65.00	9.00	8.00	PU	PUC-1370
P280651101	75.00	65.00	11.00	10.00	NBR	SUC-642
P28065L506	75.00	65.00	12.00	11.00	PU	PUC-1125
P28065L507	75.00	65.00	14.00	13.00	PU	PUC-1126
P280570901	76.00	57.00	13.00	12.00	NBR	SUD-327
P280581101	76.00	58.00	13.00	12.00	NBR	SUD-1057
P280578701	76.20	57.16	13.70	12.70	PU	PUD-1022
P280606602	76.20	60.00	13.00	12.00	FKM	SUD-1189
P280626601	76.20	62.25	6.75	6.25	FKM	SUD-1486
P280636401	76.20	63.50	7.50	7.00	FKM	SUD-1515
P280630901	76.20	63.50	9.55	8.55	NBR	SUD-1510
P280636701	76.20	63.50	10.00	9.00	FKM	SUD-1514
P280638701	76.20	63.50	10.52	9.52	PU	PUD-521

Part No.	D (H9)	d (h11)	L (+0.2)	H	Material	Mould No.
P28063L502	76.20	63.50	10.52	9.52	PU	PUD-938
P28054L502	77.00	54.00	12.00	11.00	PU	PUD-499
P280691001	78.00	69.00	7.30	6.80	NBR	SUD-1695
P28059L401	78.96	59.92	12.11	11.11	PU	PUD-617
P280580801	79.00	58.00	12.00	11.00	NBR	SUD-1479
P280651003	79.31	65.31	7.50	7.00	NBR	SUD-2024
P28047L501	80.00	47.00	17.00	16.00	PU	PUD-403
P280598301	80.00	59.00	12.30	11.30	NBR/FABRIC	SUD-1750
P280606601	80.00	60.00	11.00	10.00	FKM	SUD-917
P28060L509	80.00	60.00	11.00	10.00	PU	PUD-1199
P280605903	80.00	60.00	12.00	11.00	PU	PUD-705
P280606605	80.00	60.00	12.00	11.00	FKM	SUD-2104
P28060L506	80.00	60.00	13.00	12.00	PU	PUD-648
P280605906	80.00	60.00	14.00	13.00	PU	PUD-514
P280636601	80.00	63.00	9.00	8.00	FKM	PUD-417
P28063D601	80.00	63.00	11.00	10.00	HNBR	SUD-1118
P280641101	80.00	64.00	13.00	12.00	NBR	SUD-951
P28064L501	80.00	64.40	13.70	12.80	PU	PUD-703
P280653402	80.00	65.00	7.10	6.60	EPDM	SUD-1567
P280656601	80.00	65.00	9.00	8.00	FKM	SUD-856
P280653401	80.00	65.00	9.60	8.60	EPDM	SUD-1290
P28065L508	80.00	65.00	10.00	9.00	PU	PUD-1136
P280651002	80.00	65.00	13.00	12.00	NBR	SUD-1250
P28065L503	80.00	65.00	13.00	12.00	PU	PUD-649
P280671101	80.00	67.00	9.00	8.00	NBR	SUD-399
P280671102	80.00	67.00	11.00	10.00	NBR	SUD-1360
P280681101	80.00	68.00	8.50	7.50	NBR	SUD-1301
P28068D601	80.00	68.00	9.50	8.50	HNBR	SUD-1119
P28068L505	80.00	68.00	9.50	8.50	PU	PUD-1058
P280681001	80.00	68.00	9.50	8.50	NBR	SUD-1745
P28068L503	80.00	68.00	10.00	9.00	PU	PUD-748
P280681102	80.00	68.00	11.00	10.00	NBR	SUD-1361
P28068L502	80.00	68.00	15.00	14.00	PU	PUD-713
P28068L504	80.00	68.00	15.50	14.50	PU	PUD-841
P28068L501	80.00	68.00	16.00	15.00	PU	PUD-650
P280701003	80.00	70.00	4.75	4.25	NBR	SUD-1811
P280701103	80.00	70.00	6.50	6.00	NBR	SUD-1459
P28070L502	80.00	70.00	6.50	6.00	PU	PUD-459
P280706605	80.00	70.00	6.50	6.00	FKM	SUD-2032
P280706601	80.00	70.00	6.80	6.30	FKM	SUD-1391
P280706603	80.00	70.00	7.50	7.00	FKM	SUD-1949
P28070L509	80.00	70.00	7.80	7.30	PU	PUD-658
P280708701	80.00	70.00	7.80	7.30	PU	PUD-878
P28070L512	80.00	70.00	9.00	8.00	PU	PUD-934
P280701002	80.00	70.00	9.00	8.00	NBR	SUD-1576
P280701105	80.00	70.00	9.00	8.00	NBR	SUD-1900
P280706604	80.00	70.00	9.00	8.00	FKM	SUD-2033
P280701106	80.00	70.00	11.00	10.00	NBR	SUD-1901
P2807L503	80.00	70.00	13.00	12.00	PU	PUD-525
P28070L504	80.00	70.00	13.00	12.00	PU	PUD-612
P28071L502	80.00	71.00	6.50	6.00	PU	PUD-889
P28071L501	80.00	71.00	7.00	6.50	PU	PUD-614

Bold sizes are readily available in stock.
Other materials are available on request.

P28

Single Acting Piston Seal

MAX SPARE LIMITED
QUALITY. PRECISION. SPEED.

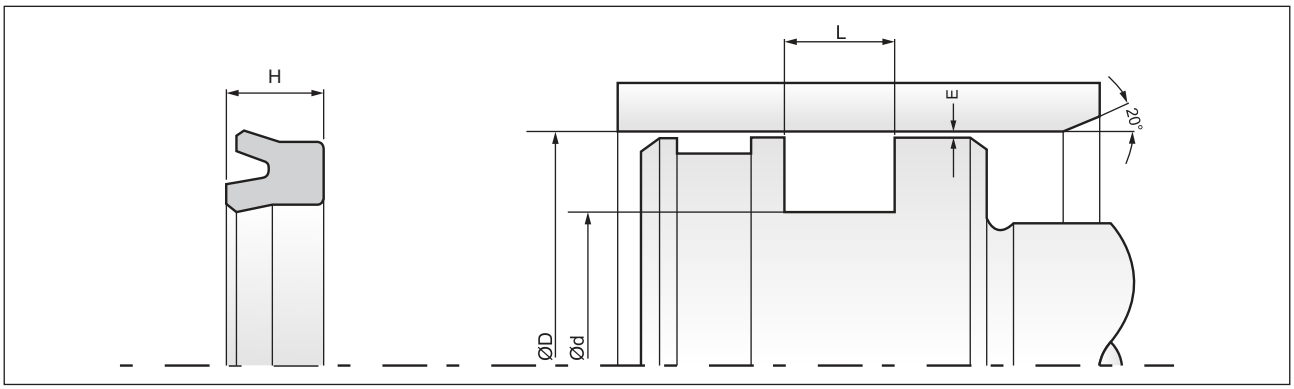

Part No.	D (H9)	d (h11)	L (+0.2)	H	Material	Mould No.
P280716604	80.00	71.00	7.10	6.60	FKM	SUD-937
P280716603	80.00	71.00	7.50	7.00	FKM	SUD-1187
P280721003	80.00	72.00	11.00	10.00	NBR	SUD-1744
P28072L501	80.00	72.00	11.00	10.00	PU	PUD-411
P280726603	80.00	72.00	12.00	11.00	FKM	SUD-1358
P280726604	80.00	72.00	13.00	12.00	FKM	SUD-101
P280706801	82.00	70.00	10.00	9.00	FKM	SUD-1973
P28070L517	82.00	70.00	15.00	14.00	PU	PUD-1045
P28057CF01	82.55	57.15	16.87	15.87	PU	PUD-1089
P28063L503	82.55	63.50	10.52	9.52	PU	PUD-1012
P280711101	82.55	71.40	7.50	6.90	NBR	SUD-1875
P28071C301	82.55	71.43	6.10	5.66	XNBR	SUD-919
P28071C301	82.55	71.43	6.10	5.66	XNBR	SUD-1155
P280626602	83.00	62.00	17.00	16.00	FKM	SUD-1741
P280726601	83.00	72.00	9.00	8.00	FKM	PUD-418
P280726701	84.00	72.00	6.00	5.50	FKM	SUD-2115
P280726602	84.00	72.00	9.40	8.40	FKM	SUD-1149
P280721002	84.00	72.00	10.30	9.30	NBR	SUD-1200
P280686701	84.50	68.95	6.00	5.50	FKM	SUD-2062
P280708702	84.80	70.80	12.00	11.00	PU	PUD-942
P280736601	84.92	73.02	9.00	8.00	FKM	SUD-2057
P280601104	85.00	60.00	13.00	12.00	NBR	SUD-915
P28070L516	85.00	70.00	9.40	8.40	PU	PUD-1043
P28070L505	85.00	70.00	10.50	9.50	PU	PUD-651
P28070L506	85.00	70.00	12.50	11.50	PU	PUD-652
P280721101	85.00	72.00	11.00	10.00	NBR	SUD-925
P28075L501	85.00	75.00	6.50	6.00	PU	PUD-537
P28075L504	85.00	75.00	7.50	7.00	PU	PUD-540
P280753402	85.00	75.00	7.50	7.00	EPDM	SUD-1772
P28075L502	85.00	75.00	10.00	9.00	PU	PUD-536
P280751102	85.00	75.00	14.00	13.00	NBR	SUD-1029
P280711001	85.66	71.66	7.50	7.00	NBR	SUD-2025
P280668701	85.72	66.67	13.70	12.70	PU	PUD-522
P280731101	85.72	73.02	9.55	8.55	NBR	SUD-1528
P28070L514	86.00	70.80	12.00	11.00	PU	PUD-941
P280771101	87.00	77.00	7.50	7.00	NBR	SUD-882
P280720901	87.58	72.57	12.00	11.00	NBR	SUD-1385
P280791101	88.90	79.37	6.85	6.35	NBR	SUD-1023
P28070L507	90.00	70.00	10.50	9.50	PU	PUD-653
P28070L518	90.00	70.00	12.00	11.00	PU	PUD-1066
P28070L508	90.00	70.00	12.50	11.50	PU	PUD-654
P28070R301	90.00	70.00	13.00	12.00	PU	PUD-707
P280706701	90.00	70.00	13.00	12.00	FKM	SUD-1182
P280701107	90.00	70.00	17.00	16.00	NBR	SUD-1955
P28070L515	90.00	70.00	17.50	16.50	PU	PUD-1040
P280741101	90.00	74.00	9.00	8.00	NBR	SUD-931
P280751201	90.00	75.00	10.00	9.00	NBR	SUD-2126
P28075L505	90.00	75.00	10.50	9.50	PU	PUD-655
P280753401	90.00	75.00	12.40	11.40	EPDM	SUD-1437
P28075L506	90.00	75.00	12.50	11.50	PU	PUD-656
P280751103	90.00	75.00	12.50	11.50	NBR	SUD-1709
P280751002	90.00	75.00	12.60	11.60	NBR	SUD-874

Part No.	D (H9)	d (h11)	L (+0.2)	H	Material	Mould No.
P28078L501	90.00	78.00	11.00	10.00	PU	PUD-449
P280796601	90.00	79.00	16.00	15.00	FKM	SUD-1165
P28080R301	90.00	80.00	6.50	6.00	PU	PUD-706
P28080L506	90.00	80.00	6.50	6.00	PU	PUD-657
P280801102	90.00	80.00	9.50	8.50	NBR	SUD-857
P280806701	90.00	80.00	14.50	13.50	FKM	SUD-1989
P280846701	90.00	84.40	4.80	4.30	FKM	SUD-2140
P280816701	91.50	81.50	7.50	7.00	FKM	SUD-2088
P280841101	94.00	84.00	7.50	7.00	NBR	SUD-1147
P28075L503	95.00	75.00	13.00	12.00	PU	PUD-539
P280771102	95.00	77.00	9.50	8.50	NBR	SUD-1015
P28080L505	95.00	80.00	10.50	9.50	PU	PUD-544
P28080L504	95.00	80.00	12.50	11.50	PU	PUD-538
P28085L502	95.00	85.00	6.50	6.00	PU	PUD-543
P28085L503	95.00	85.00	9.00	8.00	PU	PUD-542
P280831001	95.10	83.90	11.00	10.00	NBR	SUD-1249
P28076L502	95.25	76.20	16.87	15.87	PU	PUD-796
P28084L501	98.00	84.00	13.00	12.00	PU	PUD-450
P28075L507	100.00	75.00	13.00	12.00	PU	PUD-935
P280751003	100.00	75.00	19.00	18.00	NBR	SUD-1453
P280801103	100.00	80.00	7.00	6.50	NBR	SUD-940
P280806602	100.00	80.00	11.00	10.00	FKM	SUD-1584
P28080L503	100.00	80.00	13.00	12.00	PU	PUD-268
P280806603	100.00	80.00	13.00	12.00	FKM	SUD-1727
P280801108	100.00	80.00	14.00	13.00	NBR	SUD-1888
P280806601	100.00	80.00	14.00	13.00	FKM	SUD-1343
P280801105	100.00	80.00	15.00	14.00	NBR	SUD-1300
P280801104	100.00	80.00	16.00	15.00	NBR	SUD-1035
P280806604	100.00	80.00	17.00	16.00	FKM	SUD-2064
P28081L501	100.00	81.00	13.00	12.00	PU	PUD-700
P280821102	100.00	82.00	13.50	12.50	NBR	SUD-936
P280826601	100.00	82.00	14.50	13.50	FKM	SUD-1631
P280821001	100.00	82.00	14.80	13.80	NBR	SUD-1418
P280830801	100.00	83.00	11.40	10.40	NBR	SUD-1076
P280851001	100.00	85.00	8.50	7.50	NBR	SUD-2001
P280851105	100.00	85.00	9.00	8.00	NBR	SUD-1913
P280856701	100.00	85.00	10.50	9.50	FKM	SUD-1460
P28085L505	100.00	85.00	10.50	9.50	PU	PUD-699
P280851103	100.00	85.00	10.90	9.90	NBR	SUD-1094
P28085L504	100.00	85.00	11.00	10.00	PU	PUD-545
P280856702	100.00	85.00	11.00	10.00	FKM	SUD-1637
P28085L507	100.00	85.00	12.70	11.70	PU	PUD-1029
P28085L501	100.00	85.00	13.00	12.00	PU	PUD-447
P280856602	100.00	85.00	13.00	12.00	FKM	SUD-1414
P28085L506	100.00	85.00	14.00	13.00	PU	PUD-836
P280861101	100.00	86.00	10.80	9.80	NBR	SUD-1344
P280871101	100.00	87.00	6.80	6.30	NBR	SUD-905
P28087L502	100.00	87.00	9.00	8.00	PU	PUD-1004
P280876601	100.00	87.00	9.30	8.30	FKM	SUD-1496
P280871103	100.00	87.00	11.00	10.00	NBR	SUD-1704
P28087L501	100.00	87.00	16.00	15.00	PU	PUD-840
P28088L503	100.00	88.00	9.00	8.00	PU	PUD-579

Bold sizes are readily available in stock.
Other materials are available on request.

P28

Single Acting Piston Seal

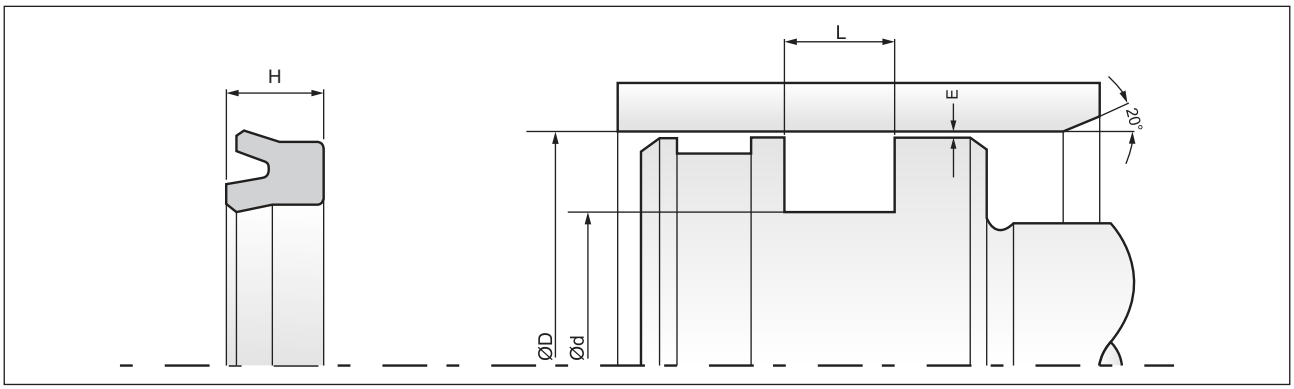

Part No.	D (H9)	d (h11)	L (+0.2)	H	Material	Mould No.
P280886602	100.00	88.00	9.50	8.50	FKM	SUD-976
P280886602	100.00	88.00	9.50	8.50	FKM	SUD-995
P280886501	100.00	88.00	9.50	8.50	FKM	SUD-1448
P280881001	100.00	88.00	9.50	8.50	NBR	SUD-1701
P28088;502	100.00	88.00	9.50	8.50	PU	PUD-541
P280886604	100.00	88.00	11.00	10.00	FKM/PTFE	SUD-962
P280886703	100.00	88.00	15.00	14.00	FKM	SUD-1446
P280881005	100.00	88.50	9.60	8.60	NBR	SUD-1754
P280891102	100.00	89.00	6.50	6.00	NBR	SUD-1019
P280901003	100.00	90.00	4.40	3.90	NBR	SUD-1882
P280901103	100.00	90.00	4.80	4.30	NBR	SUD-1851
P280906701	100.00	90.00	7.00	6.50	FKM	SUD-1790
P280901102	100.00	90.00	7.30	6.85	NBR	SUD-1345
P280906602	100.00	90.00	7.50	7.00	FKM	SUD-1393
P280901001	100.00	90.00	7.50	7.00	NBR	SUD-1507
P280900701	100.00	90.00	8.00	6.5/7.5	NBR	SUD-1544
P28090L507	100.00	90.00	8.50	7.50	PU	PUD-798
P28090L506	100.00	90.00	9.00	8.00	PU	PUD-679
P28090L509	100.00	90.00	12.00	11.00	PU	PUD-936
P280906601	100.00	90.00	13.00	12.00	FKM	SUD-1159
P28090L510	100.00	90.00	14.00	13.00	PU	PUD-937
P280801106	101.60	80.56	15.00	14.00	NBR	SUE-1196
P28082L501	101.60	82.50	11.40	10.40	PU	PUE-514
P280831003	101.60	83.00	9.50	8.50	NBR	SUE-1186
P28088C301	101.60	88.90	6.90	6.40	XNBR	SUE-947
P28088C301	101.60	88.90	6.90	6.40	XNBR	SUE-630
P280881106	101.60	88.90	7.00	6.50	NBR	SUE-1210
P280881107	101.60	88.90	8.95	7.95	NBR	SUE-1381
P280881104	101.60	88.90	10.52	9.52	NBR	SUE-648
P280886605	101.60	88.90	13.00	12.00	FKM	SUE-987
P28082L502	102.00	82.00	15.00	14.00	PU	PUE-697
P280850601	104.00	85.50	13.00	12.00	NBR/FABRIC	SUE-952
P28090L513	104.00	90.00	7.50	7.00	PU	PUE-661
P28080L507	105.00	80.00	13.00	12.00	PU	PUE-583
P280856604	105.00	85.00	13.00	12.00	FKM	SUE-1330
P280861001	105.00	86.00	13.00	12.00	NBR/FABRIC	SUE-1296
P28090L503	105.00	90.00	10.50	9.50	PU	PUE-430
P28090L504	105.00	90.00	12.50	11.50	PU	PUE-433
P28090L511	105.00	90.00	14.00	13.00	PU	PUE-585
P280910901	106.63	91.61	12.00	11.00	NBR	SUE-969
P280888701	107.95	88.90	10.52	9.52	PU	PUE-355
P280886701	107.95	88.90	13.70	12.70	FKM	SUE-608
P280831002	110.00	83.00	13.00	12.00	NBR	SUE-1064
P28090L501	110.00	90.00	13.00	12.00	PU	PUE-373
P28090L512	110.00	90.00	14.00	13.00	PU	PUE-584
P280906603	110.00	90.00	14.00	13.00	FKM	SUE-1416
P28090L505	110.00	90.00	15.00	14.00	PU	PUE-434
P28090L508	110.00	90.00	16.00	15.00	PU	PUE-559
P28095L508	110.00	95.00	10.00	9.00	PU	PUE-502
P280951105	110.00	95.00	10.50	9.50	NBR	SUE-1291
P28095L506	110.00	95.00	10.50	9.50	PU	PUE-374
P28095L507	110.00	95.00	12.50	11.50	PU	PUE-375

Part No.	D (H9)	d (h11)	L (+0.2)	H	Material	Mould No.
P28095D601	110.00	95.00	13.00	12.00	HNBR	SUE-1277
P28100L501	110.00	100.00	5.50	5.00	PU	PUE-372
P28090L502	115.00	90.00	16.00	15.00	PU	PUE-378
P28095L503	115.00	95.00	10.50	9.50	PU	PUE-379
P28095L504	115.00	95.00	12.50	11.50	PU	PUE-380
P280951102	115.00	95.00	13.00	12.00	NBR	SUE-785
P28095V301	115.00	95.00	15.00	14.00	NBR	SUE-1202
P28095L505	115.00	95.00	16.00	15.00	PU	PUE-381
P280981001	115.00	98.00	9.00	8.00	NBR	SUE-898
P28100L505	115.00	100.00	10.50	9.50	PU	PUE-376
P28100L503	115.00	100.00	12.50	11.50	PU	PUE-377
P281076701	115.00	107.65	6.80	6.30	FKM	SUE-843
P280990901	115.87	99.22	9.00	8.00	NBR	SUE-884
P281008702	117.00	100.00	11.30	10.30	PU	PUE-565
P281006601	120.00	100.00	10.53	9.53	FKM	SUE-916
P281001001	120.00	100.00	10.53	9.53	NBR	SUE-917
P28100L506	120.00	100.00	13.00	12.00	PU	PUE-435
P281004501	120.00	100.00	13.00	12.00	VMQ	SUE-1179
P28100L508	120.00	100.00	13.00	12.00	PU	PUE-448
P28100L504	120.00	100.00	15.00	14.00	PU	PUE-368
P28103L501	120.00	103.00	13.00	12.00	PU	PUE-369
P28105L501	120.00	105.00	10.50	9.50	PU	PUE-364
P28105L502	120.00	105.00	12.50	11.50	PU	PUE-365
P281016601	120.60	101.00	10.53	9.53	FKM	SUE-662
P281091103	124.00	109.50	10.70	9.70	NBR	SUE-1359
P281001002	125.00	100.00	12.50	10/11.5	NBR	SUE-936
P281006603	125.00	100.00	16.00	15.00	FKM	SUE-1257
P28100L507	125.00	100.00	17.00	16.00	PU	PUE-432
P281006602	125.00	100.00	17.00	16.00	FKM	SUE-1051
P281030901	125.00	103.00	15.00	14.00	NBR	SUE-569
P281056602	125.00	105.00	9.25	8.25	FKM	SUE-931
P28105L503	125.00	105.00	10.50	9.50	PU	PUE-436
P281051103	125.00	105.00	11.00	10.00	NBR	SUE-902
P28105L504	125.00	105.00	12.50	11.50	PU	PUE-431
P281056701	125.00	105.00	13.00	12.00	FKM	SUE-606
P281056703	125.00	105.00	16.00	15.00	FKM	SUE-955
P281051102	125.00	105.00	17.00	16.00	NBR	SUE-1316
P281081001	125.00	108.00	10.60	9.60	NBR	SUE-910
P281091001	125.00	109.00	9.00	8.00	NBR	SUE-614
P281091101	125.00	109.00	10.00	9.00	NBR	SUE-600
P281091102	125.00	109.20	11.00	10.00	NBR	SUE-767
P281106702	125.00	110.00	10.00	9.00	FKM	SUE-1015
P281106603	125.00	110.00	10.00	9.00	FKM	SUE-973
P28110L506	125.00	110.00	10.00	9.00	PU	PUE-561
P281106703	125.00	110.00	10.50	9.50	FKM	SUE-1403
P28110L501	125.00	110.00	10.50	9.50	PU	PUE-371
P281101003	125.00	110.00	11.00	10.00	NBR	SUE-1185
P281106602	125.00	110.00	11.00	10.00	FKM	SUE-649
P28110L507	125.00	110.00	11.00	10.00	PU	PUE-741
P281106601	125.00	110.00	12.00	11.00	FKM	SUE-611
P28110L502	125.00	110.00	12.50	11.50	PU	PUE-370
P281121102	125.00	112.00	7.50	7.00	NBR	SUE-1263

Bold sizes are readily available in stock.
Other materials are available on request.

P28

Single Acting Piston Seal

MAX SPARE LIMITED
QUALITY. PRECISION. SPEED.

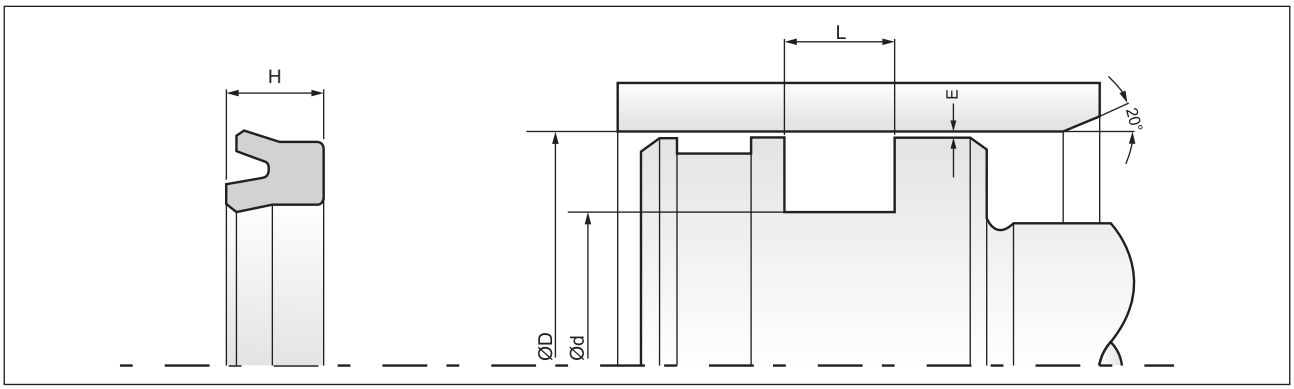

Part No.	D (H9)	d (h11)	L (+0.2)	H	Material	Mould No.
P281126601	125.00	112.00	10.00	9.00	FKM	SUE-745
P28112L503	125.00	112.00	10.00	9.00	PU	PUE-521
P281121001	125.00	112.00	10.20	9.20	NBR	SUE-930
P28112L501	125.00	112.00	10.50	9.50	PU	PUE-366
P28112L502	125.00	112.00	12.50	11.50	PU	PUE-367
P28112L504	125.00	112.00	15.50	14.50	PU	PUE-593
P281131101	125.00	113.00	15.00	14.00	NBR	SUE-1019
P281136701	125.00	113.00	15.00	14.00	FKM	SUE-1001
P281151001	125.00	115.00	6.50	6.00	NBR	SUE-1043
P281100901	125.68	110.67	12.00	11.00	NBR	SUF-670
P281136702	125.80	113.80	9.60	8.60	FKM	SUF-776
P28107L501	127.00	107.95	14.00	13.00	PU	PUF-491
P281091002	127.00	109.00	11.00	10.00	NBR	SUF-787
P281121101	127.00	112.70	7.64	7.14	NBR	SUF-814
P281131102	127.00	113.50	10.50	9.50	NBR	SUF-699
P281146701	127.00	114.30	6.85	6.35	FKM	SUF-960
P28114C301	127.00	114.30	6.85	6.35	XNBR	SUF-650
P281141101	127.00	114.30	6.85	6.35	NBR	SUF-478
P28114C301	127.00	114.30	6.85	6.35	XNBR	SUF-516
P281141102	127.00	114.30	8.95	7.95	NBR	SUF-977
P28114L502	127.00	114.30	16.87	15.87	PU	PUF-492
P281171001	127.00	117.95	5.50	5.10	NBR	SUF-697
P281101002	128.00	110.00	11.00	10.00	NBR	SUF-803
P281010601	130.00	101.00	18.00	17.00	NBR/FABRIC	SUF-904
P281046601	130.00	104.50	17.00	16.00	FKM	SUF-458
P281056605	130.00	105.00	13.00	12.00	FKM	SUF-982
P28110L503	130.00	110.00	10.50	9.50	PU	PUF-309
P28110L504	130.00	110.00	12.50	11.50	PU	PUF-300
P28110L505	130.00	110.00	16.00	15.00	PU	PUF-345
P281101104	130.00	110.00	16.00	15.00	NBR	SUF-767
P28113L501	130.00	113.00	19.25	18.25	PU	PUF-496
P28114L501	130.00	114.50	10.00	9.00	PU	PUF-389
P28115L502	130.00	115.00	10.50	9.50	PU	PUF-299
P28115L503	130.00	115.00	12.50	11.50	PU	PUF-298
P281166601	130.00	116.00	9.00	8.00	FKM	SUF-758
P28118L501	133.00	118.00	11.00	10.00	PU	PUF-297
P28118L502	133.00	118.00	13.00	12.00	PU	PUF-296
P28126L501	134.00	126.50	3.50	3.00	PU	PUF-559
P28120L502	135.00	120.00	10.50	9.50	PU	PUF-347
P28120L503	135.00	120.00	12.50	11.50	PU	PUF-348
P281251101	135.00	125.00	6.80	7.60	NBR	SUF-903
P281108301	136.00	110.00	21.00	20.00	NBR/FABRIC	SUF-101
P281276606	139.70	127.00	14.00	13.00	FKM	SUF-688
P281106701	140.00	110.00	26.50	25.50	FKM	SUF-647
P281156701	140.00	115.00	16.00	15.00	FKM	SUF-702
P28115L504	140.00	115.00	16.00	15.00	PU	PUF-344
P28120L505	140.00	120.00	10.50	9.50	PU	PUF-343
P281201003	140.00	120.00	11.00	10.00	NBR	SUF-863
P281201102	140.00	120.00	12.00	11.00	NBR	SUF-962
P28120L506	140.00	120.00	12.50	11.50	PU	PUF-341
P28120L507	140.00	120.00	13.00	12.00	PU	PUF-412
P281201002	140.00	120.00	13.20	12.20	NBR	SUF-775

Part No.	D (H9)	d (h11)	L (+0.2)	H	Material	Mould No.
P28120L504	140.00	120.00	15.00	14.00	PU	PUF-346
P28120L501	140.00	120.00	16.00	15.00	PU	PUF-293
P281206301	140.00	120.00	16.30	15.30	FKM/FABRIC	SUF-819
P28125L504	140.00	125.00	10.00	9.00	PU	PUF-380
P28125L501	140.00	125.00	10.50	9.50	PU	PUF-295
P28125L502	140.00	125.00	12.50	11.50	PU	PUF-294
P28128L501	140.00	128.00	15.00	14.00	PU	PUF-418
P281301002	140.00	130.00	9.00	8.00	NBR	SUF-754
P281290901	144.72	129.71	12.00	11.00	NBR	SUF-662
P28125L503	145.00	125.00	16.00	15.00	PU	PUF-349
P281298701	145.00	129.00	9.00	8.00	PU	PUF-484
P28130L502	145.00	130.00	10.50	9.50	PU	PUF-292
P28130L503	145.00	130.00	12.50	11.50	PU	PUF-291
P281206601	150.00	120.00	16.00	15.00	FKM	SUF-900
P28125L505	150.00	125.00	20.00	19.00	PU	PUF-395
P28130L504	150.00	130.00	16.00	15.00	PU	PUF-290
P281351101	150.00	135.00	9.00	8.00	NBR	SUF-684
P28135L501	150.00	135.00	10.50	9.50	PU	PUF-289
P281356701	150.00	135.00	11.00	10.00	FKM	SUF-477
P28135L502	150.00	135.00	12.50	11.50	PU	PUF-288
P28135L503	150.00	135.00	17.00	16.00	PU	PUF-287
P28136L501	150.00	136.00	9.50	8.50	PU	PUF-373
P28138L502	150.00	138.00	16.00	15.00	PU	PUF-397
P281168401	150.20	116.00	17.50	16.50	NBR/FABRIC	SUG-625
P281301001	151.00	130.00	10.40	9.40	NBR	SUG-491
P281246701	152.40	124.75	13.50	12.60	FKM	SUG-572
P28133L501	152.40	133.36	13.70	12.70	PU	PUG-307
P281361101	152.40	136.52	8.93	7.93	NBR	SUG-775
P28136L401	152.40	136.65	8.90	7.90	PU	PUG-289
P281371101	152.40	137.80	10.52	9.52	NBR	SUG-459
P28138L501	152.40	138.00	10.50	9.50	PU	PUG-313
P281396601	152.40	139.00	9.00	8.00	FKM	SUG-738
P281428701	152.40	142.34	7.10	6.60	PU	PUG-287
P281301005	152.50	130.00	14.00	13.00	NBR	SUG-831
P281241101	153.00	124.75	13.50	12.60	NBR	SUG-522
P281281001	153.00	128.00	21.00	20.00	NBR	SUG-598
P281301003	156.36	130.96	18.00	17.00	NBR	SUG-705
P281301004	160.00	130.00	15.00	14.00	NBR	SUG-734
P28130L505	160.00	130.00	19.00	18.00	PU	PUG-300
P281306601	160.00	130.00	20.00	19.00	FKM	SUG-874
P281351001	160.00	135.00	16.00	15.00	NBR	SUG-546
P28135L504	160.00	135.00	17.00	16.00	PU	PUG-270
P281366701	160.00	136.00	22.50	21.50	FKM	SUG-604
P281401003	160.00	140.00	9.00	8.00	NBR	SUG-767
P281406701	160.00	140.00	9.00	8.00	FKM	SUG-425
P28140L502	160.00	140.00	10.50	9.50	PU	PUG-265
P281401102	160.00	140.00	12.00	11.00	NBR	SUG-541
P28140L503	160.00	140.00	12.50	11.50	PU	PUG-266
P281401001	160.00	140.00	13.00	12.00	NBR	SUG-735
P281406601	160.00	140.00	15.00	14.00	FKM	SUG-798
P28140L501	160.00	140.00	16.00	15.00	PU	PUG-267
P281446601	160.00	144.00	10.80	9.80	FKM	SUG-536

Bold sizes are readily available in stock.
Other materials are available on request.

MAX SPARE LIMITED
QUALITY. PRECISION. SPEED.

P28

Single Acting Piston Seal

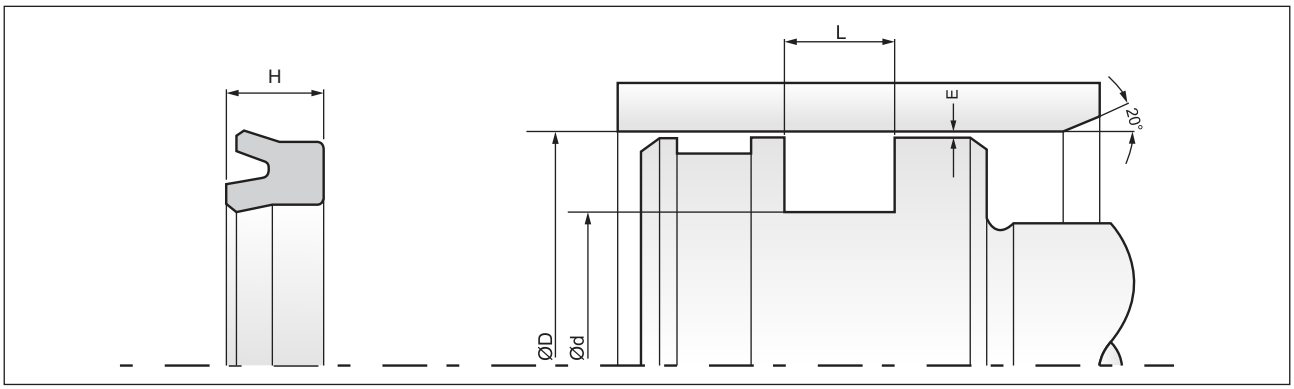

Part No.	D (H9)	d (h11)	L (+0.2)	H	Material	Mould No.
P281441101	160.00	144.00	11.00	10.00	NBR	SUG-517
P28144L501	160.00	144.00	18.20	17.20	PU	PUG-278
P281441102	160.00	144.00	19.00	18.00	NBR	SUG-814
P281458301	160.00	145.00	10.00	9.00	NBR/FABRIC	SUG-760
P281456601	160.00	145.00	10.00	9.00	FKM	SUG-593
P281451101	160.00	145.00	10.00	9.00	NBR	SUG-820
P281451102	160.00	145.00	10.00	9.00	NBR	SUG-850
P28145L503	160.00	145.00	10.50	9.50	PU	PUG-268
P281456701	160.00	145.00	11.00	10.00	FKM	SUG-356
P28145L505	160.00	145.00	11.00	10.00	PU	PUG-315
P281450901	160.00	145.00	11.00	10.00	NBR	SUG-885
P28145L504	160.00	145.00	12.50	11.50	PU	PUG-269
P28145L501	160.00	145.00	13.00	12.00	PU	PUG-236
P28145L502	160.00	145.00	17.00	16.00	PU	PUG-235
P281461101	160.00	146.00	11.00	10.00	NBR	SUG-667
P28147L501	160.00	147.00	15.50	14.50	PU	PUG-401
P281481102	160.00	148.00	9.00	8.00	NBR	SUG-480
P28148L501	160.00	148.00	13.00	12.00	PU	PUG-340
P281481101	160.00	148.00	16.00	15.00	NBR	SUG-431
P28150L505	160.00	150.00	13.00	12.00	PU	PUG-251
P28150L402	160.00	150.50	13.00	12.00	PU	PUG-327
P281406602	160.80	140.00	16.00	15.00	FKM	SUG-878
P281401004	161.00	140.00	16.00	15.00	NBR	SUG-865
P281480901	163.77	148.76	12.00	11.00	NBR	SUG-585
P28150L503	165.00	150.00	13.00	12.00	PU	PUG-242
P28150L504	165.00	150.00	17.00	16.00	PU	PUG-241
P281551001	165.00	155.00	9.00	8.00	NBR	SUG-508
P281551001	165.00	155.00	9.00	8.00	NBR	SUG-450
P281553401	165.00	155.00	9.00	8.00	EPDM	SUG-758
P281240901	165.33	124.73	26.00	25.00	NBR	SUG-833
P281591001	168.27	159.25	5.50	5.10	NBR	SUG-617
P281356601	170.00	135.00	16.00	15.00	FKM	SUG-872
P28150L506	170.00	150.00	16.00	15.00	PU	PUG-304
P28150L507	170.00	150.00	17.00	16.00	PU	PUG-352
P28155R301	170.00	155.00	10.00	9.00	PU	PUG-228
P281460801	171.45	146.05	16.87	15.87	NBR	SUG-875
P28160L506	172.00	160.00	15.00	14.00	PU	PUG-399
P281526601	177.80	152.40	18.46	17.46	FKM	SUH-385
P281521001	177.80	152.40	20.60	19.60	NBR	SUH-383
P281501101	180.00	150.00	26.00	25.00	NBR	SUH-497
P28160L503	180.00	160.00	13.00	12.00	PU	PUH-218
P28160L505	180.00	160.00	16.00	15.00	PU	PUH-242
P28160L504	180.00	160.00	17.00	16.00	PU	PUH-219
P28165L501	180.00	165.00	10.00	9.00	PU	PUH-236
P281656601	180.00	165.00	10.50	9.50	FKM	SUH-531
P281670901	182.82	167.81	12.00	11.00	NBR	SUH-390
P28160L501	185.00	160.00	13.00	12.00	PU	PUH-201
P28160L502	185.00	160.00	17.00	16.00	PU	PUH-203
P281671101	185.00	167.00	12.00	11.00	NBR	SUH-458
P281540901	190.00	154.00	18.50	17.50	NBR	SUH-332
P281600801	190.00	160.00	16.00	15.00	NBR	SUH-226
P281876501	197.00	187.00	15.00	14.00	FKM	SUH-378

Part No.	D (H9)	d (h11)	L (+0.2)	H	Material	Mould No.
P281706701	200.00	170.00	17.50	16.50	FKM	SUH-522
P281708401	200.00	170.00	26.00	25.00	NBR/FABRIC	SUH-334
P281756603	200.00	175.00	13.50	12.50	FKM	SUH-519
P28175Q201	200.00	175.00	15.00	14.00	PU	PUH-230
P281756602	200.00	175.00	16.00	15.00	FKM	SUH-344
P28175L501	200.00	175.00	16.50	15.50	PU	PUH-248
P28175S401	200.00	175.00	20.00	19.00	HNBR	SUH-516
P281761101	200.00	176.00	13.00	12.00	NBR	SUH-377
P281806602	200.00	180.00	9.00	8.00	FKM	SUH-260
P281801005	200.00	180.00	9.00	8.00	NBR	SUH-524
P281801004	200.00	180.00	9.20	8.20	NBR	SUH-305
P281800801	200.00	180.00	11.00	10.00	NBR	SUH-355
P28180L504	200.00	180.00	12.20	11.20	PU	PUH-241
P28180R301	200.00	180.00	13.00	12.00	PU	PUH-225
P28180L501	200.00	180.00	13.00	12.00	PU	PUH-202
P281806701	200.00	180.00	13.00	12.00	FKM	SUH-384
P281806501	200.00	180.00	15.00	14.00	FKM	SUH-343
P281806501	200.00	180.00	15.00	14.00	FKM	SUH-229
P281806604	200.00	180.00	15.00	14.00	FKM	SUH-506
P28180L506	200.00	180.00	15.80	14.80	PU	PUH-300
P281806603	200.00	180.00	16.00	15.00	FKM	SUH-391
P28180L503	200.00	180.00	16.00	15.00	PU	PUH-216
P281806701	200.00	180.00	16.70	15.70	FKM	SUH-365
P28180L505	200.00	180.00	17.00	16.00	PU	PUH-280
P28183L501	200.00	183.00	19.00	18.00	PU	PUH-249
P28184L501	200.00	184.00	18.50	17.50	PU	PUH-189
P281846701	200.00	184.00	19.00	18.00	FKM	SUH-418
P28185L502	200.00	185.00	9.50	8.50	PU	PUH-305
P281856601	200.00	185.00	18.00	17.00	FKM	SUH-412
P281906601	200.00	190.00	15.00	14.00	FKM	SUH-379
P281906501	200.00	190.00	15.00	14.00	FKM	SUH-370
P281906602	200.00	190.00	15.00	14.00	FKM	SUH-505
P281860901	201.87	186.86	12.00	11.00	NBR	SUJ-334
P281810902	202.30	181.40	15.00	14.00	NBR	SUJ-308
P28166O301	203.20	166.68	20.00	19.00	NBR	SUJ-253
P28184C301	203.20	184.15	13.70	12.70	XNBR	SUJ-324
P281841101	203.20	184.15	13.70	12.70	NBR	SUJ-340
P28187C301	203.20	187.32	8.89	7.89	XNBR	SUJ-267
P28180L502	205.00	180.00	17.00	16.00	PU	PUJ-185
P281861101	206.96	186.96	10.40	9.40	NBR	SUJ-385
P281818401	208.00	181.00	18.00	17.00	NBR/FABRIC	SUJ-431
P28185L501	210.00	185.00	17.00	16.00	PU	PUJ-184
P28190L503	210.00	190.00	13.00	12.00	PU	PUJ-193
P281906701	210.00	190.00	16.00	15.00	FKM	SUJ-412
P28190L504	210.00	190.00	17.00	16.00	PU	PUJ-233
P28190L501	215.00	190.00	13.00	12.00	PU	PUJ-178
P281988701	215.00	198.00	7.80	7.30	PU	PUJ-251
P281846501	216.00	184.30	20.00	19.00	FKM	SUJ-246
P282031101	219.45	203.59	19.00	17.80	NBR	SUJ-312
P28195L501	220.00	195.00	17.00	16.00	PU	PUJ-177
P28200L502	220.00	200.00	13.00	12.00	PU	PUJ-176
P28200L501	220.00	200.00	16.00	15.00	PU	PUJ-154

Bold sizes are readily available in stock.
Other materials are available on request.

P28

Single Acting Piston Seal

MAX SPARE LIMITED
QUALITY. PRECISION. SPEED.

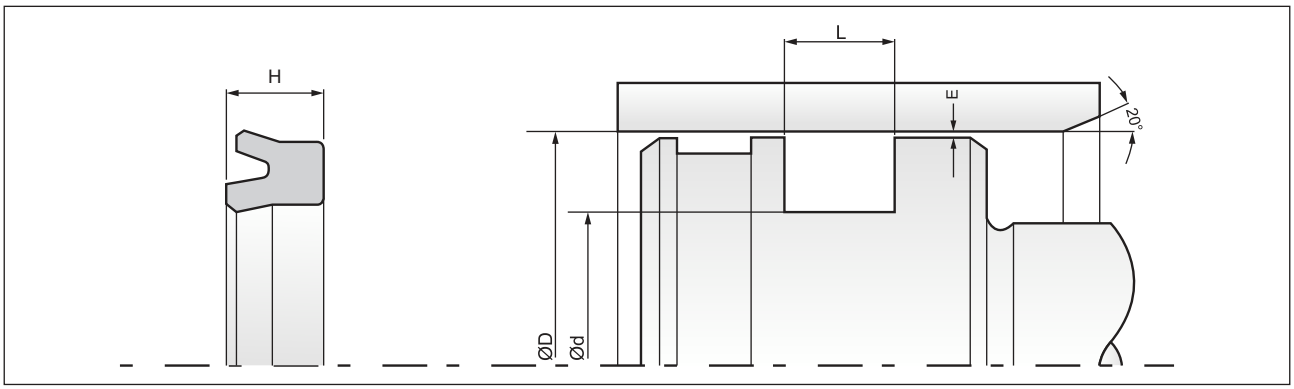

Part No.	D (H9)	d (h11)	L (+0.2)	H	Material	Mould No.
P28200L503	220.00	200.00	17.00	16.00	PU	PUJ-181
P282041101	220.00	204.00	18.70	17.70	NBR	SUJ-300
P282046601	220.00	204.00	19.00	18.00	FKM	SUJ-348
P28204L501	220.00	204.00	19.00	18.00	PU	PUJ-208
P28210L501	220.00	210.00	13.00	12.00	PU	PUJ-180
P28210L502	220.00	210.00	17.00	16.00	PU	PUJ-179
P282050901	220.92	205.91	12.00	11.00	NBR	SUJ-335
P282001001	223.00	200.76	14.30	13.30	NBR	SUJ-315
P282191001	228.60	219.10	12.10	11.10	NBR	SUK-212
P28217Q201	229.50	217.00	26.00	25.00	PU	PUK-212
P28210L503	230.00	210.00	13.00	12.00	PU	PUK-155
P28210R301	230.00	210.00	16.00	15.00	PU	PUK-160
P28214Q201	230.00	214.00	20.00	19.00	PU	PUK-157
P28215L501	240.00	215.00	20.00	19.00	PU	PUK-194
P28220L501	240.00	220.00	13.00	12.00	PU	PUK-150
P28220L502	240.00	220.00	17.00	16.00	PU	PUK-149
P282356601	242.00	235.00	4.90	4.40	FKM	SUK-201
P282256701	245.00	225.00	15.00	14.00	FKM	SUK-311
P282151102	250.00	215.00	21.00	20.00	NBR	SUK-268
P282206601	250.00	220.00	16.00	15.00	FKM	SUK-209
P28225L501	250.00	225.00	20.00	19.00	PU	PUK-112
P282261001	250.00	226.00	12.00	11.00	NBR	SUK-301
P282306605	250.00	230.00	13.50	12.50	FKM	SUK-275
P282306601	250.00	230.00	15.00	14.00	FKM	SUK-178
P282306701	250.00	230.00	15.00	14.00	FKM	SUK-205
P282306603	250.00	230.00	15.00	14.00	FKM	SUK-218
P282306501	250.00	230.00	15.00	14.00	FKM	SUK-239
P282300901	250.00	230.00	15.00	14.00	NBR	SUK-245
P282306402	250.00	230.00	15.00	14.00	FKM	SUK-321
P282306606	250.00	230.00	16.00	15.00	FKM	SUK-243
P28230L505	250.00	230.00	16.00	15.00	PU	PUK-190
P282346601	250.00	234.00	20.00	19.00	FKM	SUK-307
P282008401	251.20	200.00	24.80	23.80	NBR/FABRIC	SUM-639
P28239Q201	252.88	239.88	8.62	7.62	PU	PUM-264
P282281001	254.00	228.60	20.00	19.00	NBR	SUM-473
P28234C301	254.00	234.95	13.70	12.70	XNBR	SUM-571
P282361101	254.00	236.93	9.73	8.73	NBR	SUM-515
P28241L501	254.00	241.30	8.74	7.74	PU	PUM-404
P28230L501	255.00	230.00	19.00	18.00	PU	PUM-208
P28238L501	257.04	238.76	8.87	7.87	PU	PUM-289
P282248301	259.00	224.00	22.00	21.00	NBR/FABRIC	SUM-443
P282241002	259.00	224.50	19.00	16/18	NBR	SUM-620
P282241003	259.15	224.23	21.00	20.00	NBR	SUM-713
P282258301	260.00	225.00	20.00	19.00	NBR/FABRIC	SUM-709
P282258302	260.00	225.00	21.00	20.00	NBR/FABRIC	SUM-721
P282241001	260.40	224.50	19.00	16/18	NBR	SUM-619

Part No.	D (H9)	d (h11)	L (+0.2)	H	Material	Mould No.
P28264Q201	279.00	264.00	27.00	26.00	PU	PUM-240
P28250L501	280.00	250.00	19.00	18.00	PU	PUM-285
P28264L501	280.00	264.00	19.00	18.00	PU	PUM-323
P28260L501	290.00	260.00	19.00	18.00	PU	PUM-207
P282604501	300.00	260.00	21.00	20.00	VMQ	SUM-614
P282620601	300.00	262.00	21.00	20.00	NBR	SUM-690
P28270L502	300.00	270.00	20.00	19.00	PU	PUM-232
P28270L501	300.00	270.00	21.00	20.00	PU	PUM-206
P282746601	300.00	274.00	14.00	13.00	FKM	SUM-559
P28275L501	300.00	275.00	17.00	16.00	PU	PUM-225
P282806601	300.00	280.00	15.00	14.00	FKM	SUM-712
P282851101	304.80	285.75	13.70	12.70	NBR	SUM-624
P282781101	305.00	278.00	13.50	12.50	NBR	SUM-863
P282821001	305.00	282.00	17.50	16.50	NBR	SUM-404
P282883101	308.00	288.00	15.00	14.00	EPDM	SUM-763
P282768302	310.00	276.00	21.00	20.00	NBR/FABRIC	SUM-720
P282768301	311.15	276.30	21.00	20.00	NBR/FABRIC	SUM-710
P28295Q201	320.00	295.00	27.00	26.00	PU	PUM-236
P282956002	320.00	295.00	27.00	26.00	CPU	CPU-158
P28302L501	320.00	302.00	19.00	18.00	PU	PUM-384
P283051001	320.00	305.00	12.00	11.00	NBR	SUM-762
P283341001	349.80	334.00	8.50	7.50	NBR	SUM-528
P283176701	355.60	317.50	26.40	25.40	FKM	SUM-744
P28336L501	360.00	336.00	25.00	24.00	PU	PUM-284
P283403101	360.00	340.00	15.00	14.00	EPDM	SUM-764
P28349O501	374.65	349.25	13.00	11.93	HYT-3	PUM-218
P283457901	377.15	345.55	13.00	12.00	HYT	PUM-313
P28387Q201	397.00	387.00	7.50	7.00	PU	PUM-283
P283500801	398.00	350.00	23.00	20.00/22.00	NBR	SUM-599
P280036301	400.00	374.00	15.70	14.70	FKM	SUM-751
P283811101	406.40	381.00	16.90	15.90	NBR	SUVG-639
P283923101	412.00	392.00	15.00	14.00	EPDM	SUVG-656
P283906601	415.00	390.00	16.00	15.00	FKM	SUVG-657
P28420D601	445.00	420.00	20.00	19.00	HNBR	SUVG-671
P284547901	491.95	454.95	16.00	14.85	HYT	PUM-314
P284950601	525.00	495.00	22.20	22.20	NBR	SUVG-468
P285101101	530.00	510.00	11.00	10.00	NBR	SUVG-474
P28508L501	533.40	508.00	13.00	11.93	PU	PUM-328
P280508O501	533.40	508.00	13.00	11.93	HYT	PUM-247
P28615D601	628.65	615.95	9.10	8.10	HNBR	SUVG-467
P286003401	630.00	600.00	26.00	25.00	EPDM	SUVG-574
P286701001	710.00	670.00	26.00	25.00	NBR/FABRIC	SUVG-463
P28939S401	990.60	939.80	25.63	24.63	HNBR	SUVG-587
P289991102	1450.00	1420.00	21.00	20.00	NBR	SLO-657
P289991001	5300.00	5329.00	12.50	11.50	NBR	SLO-467

Bold sizes are readily available in stock.
Other materials are available on request.

P29

Single Acting Piston Seal

DETAILS

P29 is an asymmetrical single acting piston seal for medium loads preferably for spare requirement. The seal comes with an anti-extrusion ring which helps to prevent extrusion of the seal and to allow greater clearances and higher pressures.

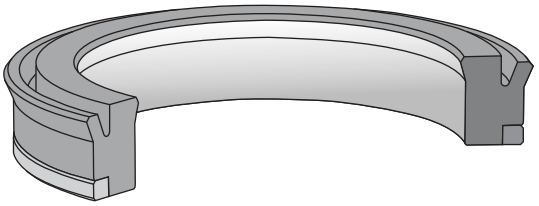

COMPATIBILITY

Mineral oils, bio oils, water soluble & water glycol fluids.

MATERIAL

U Ring : Nitrile Rubber 80 Shore A
Backup Ring : POM / Nylon

APPLICATION

- Excavators.
- Earth moving equipment.
- Forestry equipment.
- Standard cylinders.

OPERATING CONDITIONS

Temperature Range : -30°C to + 100°C
Pressure : 250 Bar
Speed : 0.5 m/s

FEATURES

- Static & dynamic sealing effect.
- Low friction.
- Back-up ring prevents extrusion.
- Size up to 1500 mm dia. available on request.
- Easy installation.

SURFACE ROUGHNESS

Static : 1.6 µmRa
Dynamic : 0.4 µmRa

INSTALLATION & ASSEMBLY

P29 piston seals are easily assembled in to closed grooves. The assembly tool must be soft and have no sharp edges. The seal must be properly lubricated before installation.

PERMISSIBLE EXTRUSION GAP	E max (mm)
50 Bar	0.90
100 Bar	0.80
250 Bar	0.60

P29

Single Acting Piston Seal

MAX SPARE LIMITED
QUALITY. PRECISION. SPEED.

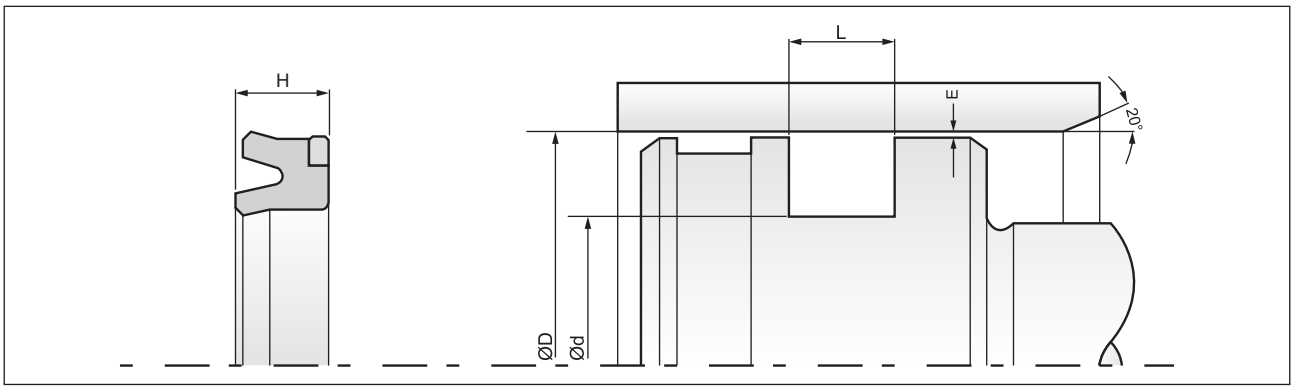

Part No.	D (H11)	d (h11)	L (+0.2)	H	Material	Mould No.
P290080801	16.00	8.00	4.60	4.10	NBR	SUA-807
P290201101	32.00	20.00	11.00	10.00	NBR	SUB-1885
P29025L501	35.00	25.00	7.50	7.00	PU	PUB-714
P29030L501	38.00	30.00	9.80	8.80	PU	PUB-1418
P290256601	40.00	25.00	11.00	10.00	FKM	SUB-1638
P290251101	40.00	25.00	11.00	10.00	NBR	SUB-1953
P290351001	44.00	35.30	9.80	8.80	NYLON	PFB-1058
P290351001	44.00	35.30	9.80	8.80	NBR	SUB-2932
P29030L502	45.00	30.00	10.00	9.00	PU	PUB-1816
P290328301	45.00	32.00	11.00	10.00	NBR/FABRIC	SUB-2089
P290356601	45.00	35.00	7.50	7.00	FKM	SUB-2159
P29035V201	45.00	35.00	9.50	8.50	NBR	SUB-4005
P290356602	45.00	35.00	11.00	10.00	FKM	SUB-2613
P29035L501	50.00	35.00	10.30	9.30	PU	PUB-654
P290351101	50.00	35.00	11.00	10.00	NBR	SUB-1170
P290358301	50.00	35.00	11.00	10.00	NBR/FABRIC	SUB-2202
P290361101	50.00	36.00	10.00	9.00	NBR	SUB-1691
P29047L501	55.05	47.60	4.15	3.65	PU	PUC-1371
P290481001	57.00	48.00	9.60	8.60	NBR	SUC-2022
P290481001	57.00	48.00	9.60	8.60	NYLON	PFB-1059
P290351002	58.00	35.00	16.50	15.50	NBR	SUC-2177
P29040L501	60.00	40.00	12.40	11.40	PU	PUC-1152
P290458301	60.00	45.00	11.00	10.00	NBR/FABRIC	SUC-1464
P29050L501	63.50	50.80	10.52	9.52	PU	PUC-428
P290451101	70.00	45.00	16.50	15.50	NBR	SUC-1871
P290451001	70.00	45.00	17.00	16.00	NBR	SUC-2075
P290551101	70.00	55.00	12.80	11.80	NBR	SUC-1308
P29057U101	70.00	57.50	9.43	8.43	FKM	SUC-2777
P290551102	75.00	55.00	13.00	12.00	NBR	SUC-1369
P290556401	75.00	55.00	13.50	12.50	FKM	SUC-1188
P290606601	75.00	60.00	11.00	10.00	FKM	SUC-2036
P290601101	75.00	60.00	13.00	12.00	NBR	SUC-1417
P29065L503	75.00	65.00	12.40	11.40	PU	PUC-1151
P290606704	80.00	60.00	13.00	12.00	FKM	SUD-1313
P29060L401	80.00	60.00	13.20	12.20	PU	PUD-493
P290606701	80.00	60.00	13.50	12.50	FKM	SUD-1005
P29065L501	80.00	65.00	10.30	9.30	PU	CS-1633
P290651101	80.00	65.00	11.00	10.00	NBR	SUD-902
P290708701	90.00	70.00	13.00	12.00	PU	CS-2192
P290808301	100.00	80.00	13.00	12.00	NBR/FABRIC	SUD-1562
P290801102	100.00	80.00	16.00	15.00	NBR	SUD-1760

Part No.	D (H11)	d (h11)	L (+0.2)	H	Material	Mould No.
P290801101	100.00	80.00	16.00	15.00	NBR	SUD-927
P290851001	100.00	85.00	13.00	12.00	NBR	SUD-868
P290821001	101.60	82.30	12.00	11.00	NBR	SUE-1251
P29090L501	110.00	90.00	13.20	12.20	PU	PUE-660
P29095L501	115.00	95.00	13.20	12.20	PU	PUE-439
P29100L501	120.00	100.00	14.00	13.00	PU	PUE-357
P291006601	125.00	100.00	16.20	15.20	FKM	SUE-1057
P291056601	125.00	105.00	12.60	11.60	FKM	SUE-609
P291101001	130.00	110.00	16.00	15.00	NBR	CS-2214
P291151101	135.00	115.00	16.00	15.00	NBR	SUF-484
P29115L501	140.00	115.00	16.20	15.20	PU	PUF-315
P291206701	140.00	120.00	13.20	12.20	FKM	SUF-581
P291208701	140.00	120.00	13.20	12.20	PU	PUF-234
P29130L502	150.00	130.00	13.20	12.20	PU	PUF-237
P291271001	152.40	127.00	20.00	19.10	NBR	SUG-757
P29130L501	160.00	130.00	19.60	18.60	PU	PUG-173
P29130L503	160.00	130.00	20.00	19.00	PU	PUG-288
P291358302	160.00	135.00	15.50	14.50	NBR/FABRIC	SUG-603
P291358301	160.00	135.00	19.00	18.00	NBR/FABRIC	SUG-333
P291408701	160.00	140.00	13.20	12.20	PU	PUG-407
P29150L501	170.00	150.00	13.00	12.00	PU	PUG-406
P29160L501	180.00	160.00	13.20	12.20	PU	PUH-261
P29170L501	200.00	170.00	20.00	19.00	PU	PUH-165
P29175L501	200.00	175.00	17.00	16.00	PU	PUH-175
P292006701	220.00	200.00	12.00	11.00	FKM	SUJ-368
P29200L501	220.00	200.00	16.00	15.00	PU	PUJ-168
P29200L502	220.00	200.00	17.00	16.00	PU	PUJ-226
P291958701	225.00	195.00	19.60	18.60	PU	PUJ-227
P29195L501	225.00	195.00	20.00	19.00	PU	PUJ-173
P29210L501	240.00	210.00	20.00	19.00	PU	CS-2185
P292208701	250.00	220.00	20.00	19.00	PU	PUK-144
P292206701	250.00	220.00	20.00	19.00	FKM	SUK-271
P292258701	250.00	225.00	16.70	15.70	PU	PUK-170
P29225L501	250.00	225.00	17.00	16.00	PU	PUK-182
P292501101	280.00	250.00	18.00	17.00	NBR	SUM-598
P29250L501	280.00	250.00	19.60	18.60	PU	PUM-224
P293606601	400.00	360.00	28.50	27.50	FKM	SUM-783
P293606701	400.00	360.00	29.00	28.00	FKM/BFT	SUM-792
P293811001	406.40	381.00	20.70	19.70	NBR	SUVG-642
P294708701	500.00	470.00	26.00	25.00	PU	PUM-302

Bold sizes are readily available in stock.
Other materials are available on request.

P38

Single Acting Piston Fluid Seal

DETAILS

P38 single acting fluid seal used in piston applications. It comprises of a rubberized fabric which is bonded to a nitrile energizer and an anti-extrusion ring in thermoplastic elastomer.

COMPATIBILITY

Mineral oils, hydraulic oils, water and air.

MATERIAL

Sealing Ring : Nitrile Rubber / Fabric 75/80 Shore A.
Back Up ring : POM / Nylon

APPLICATION

- Medium to heavy duty hydraulic cylinders.
- Valves spindles.
- Mining Equipments, Presses & Standard Cylinders.

OPERATING CONDITIONS

Temperature Range : -30°C to + 100°C
Pressure : 400 Bar
Speed : 0.5 m/s

FEATURES

- Small section.
- Easy to assemble.
- Well proven design.
- Reinforced fabric have protect seal from extrusion.
- Good sealing even at low pressure.

SURFACE ROUGHNESS

Static : 0.8 µmRa
Dynamic : 0.4 µmRa

INSTALLATION & ASSEMBLY

P38 piston fluid seals are assembled in to open grooves. The assembly tool must be soft and have no sharp edges. The seal must be properly lubricated before installation.

PERMISSIBLE EXTRUSION GAP	E max (mm)
150 Bar	0.40
250 Bar	0.30
400 Bar	0.20

P38

Single Acting Piston Fluid Seal

MAX SPARE LIMITED
QUALITY. PRECISION. SPEED.

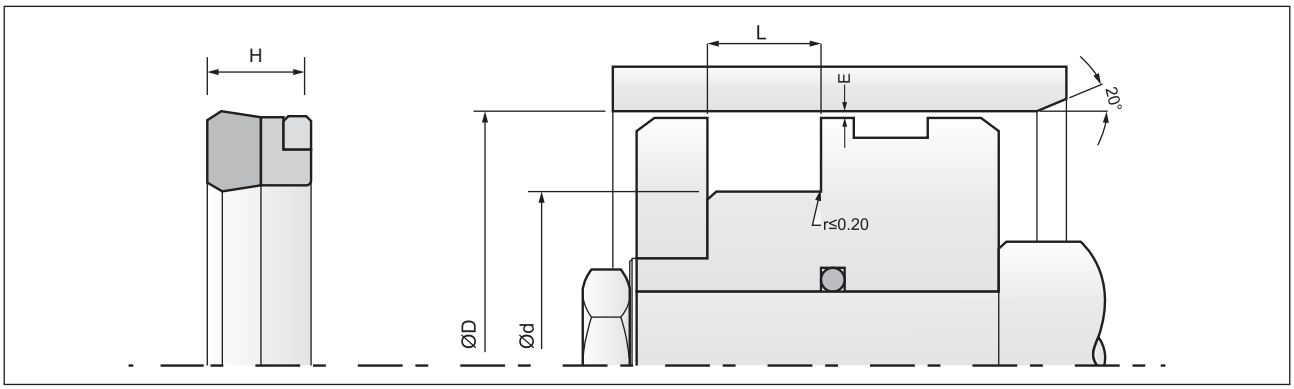

Part No.	D (H11)	d (f8)	L (0.2)	H	Material	Mould No.
P380408302	50.00	40.00	6.50	6.00	NBR/FABRIC	PRV-587
P380408304	50.00	40.00	10.00	9.00	NBR/FABRIC	PRV-849
P380408306	50.00	40.00	11.00	10.00	NBR/FABRIC	PRV-985
P380408301	60.00	40.00	15.50	14.50	NBR/FABRIC	PRV-533
P380408303	70.00	40.00	12.00	11.00	NBR/FABRIC	PRV-850
P380558301	70.00	55.00	12.00	11.00	NBR/FABRIC	PRV-852
P380408305	70.00	40.00	13.00	12.00	NBR/FABRIC	PRV-984
P380558302	70.00	55.00	13.00	12.00	NBR/FABRIC	PRV-977
P380458301	70.00	45.00	15.00	14.00	NBR/FABRIC	PRV-851
P380458302	70.00	45.00	16.00	15.00	NBR/FABRIC	PRV-979
P380488301	72.00	48.00	16.00	15.00	NBR/FABRIC	PRV-853
P380488303	72.00	48.00	17.00	16.00	NBR/FABRIC	PRV-983
P380608303	75.00	60.00	12.00	11.00	NBR/FABRIC	PRV-854
P380608305	75.00	60.00	13.00	12.00	NBR/FABRIC	PRV-978
P380508301	75.00	50.00	17.00	16.00	NBR/FABRIC	PRV-1029
P380578301	76.00	57.00	14.00	13.00	NBR/FABRIC	PRV-855
P380578302	76.00	57.00	15.00	14.00	NBR/FABRIC	PRV-988
P380608304	80.00	60.00	12.00	11.00	NBR/FABRIC	PRV-857
P380658302	80.00	65.00	12.00	11.00	NBR/FABRIC	PRV-858
P380608306	80.00	60.00	13.00	12.00	NBR/FABRIC	PRV-980
P380658303	80.00	65.00	13.00	12.00	NBR/FABRIC	PRV-987
P380608302	80.00	60.00	14.50	13.50	NBR/FABRIC	SRV-1264

Part No.	D (H11)	d (f8)	L (0.2)	H	Material	Mould No.
P380608301	80.00	60.00	15.00	14.00	NBR/FABRIC	PRV-673
P380648301	80.00	64.00	16.00	15.00	NBR/FABRIC	PRV-1082
P380488302	80.00	48.00	18.00	17.00	NBR/FABRIC	PRV-856
P380488304	80.00	48.00	19.00	18.00	NBR/FABRIC	PRV-986
P380708303	85.00	70.00	12.00	11.00	NBR/FABRIC	PRV-859
P380708305	85.00	70.00	13.00	12.00	NBR/FABRIC	PRV-982
P380658301	85.00	65.00	14.50	13.50	NBR/FABRIC	PRV-785
P380708301	90.00	70.00	12.00	11.00	NBR/FABRIC	PRV-674
P380708304	90.00	70.00	13.00	12.00	NBR/FABRIC	PRV-981
P380788501	90.00	78.00	13.00	12.00	FKM/FABRIC	PRV-722
P380708302	90.00	70.00	15.00	14.00	NBR/FABRIC	PRV-675
P380768301	92.07	76.20	10.50	9.50	NBR/FABRIC	PRV-676
P380808302	100.00	80.00	12.70	11.70	NBR/FABRIC	PRV-838
P380858303	100.00	85.00	13.00	12.00	NBR/FABRIC	PRV-848
P380758301	100.00	75.00	15.00	14.00	NBR/FABRIC	PRV-860
P380758302	100.00	75.00	18.00	17.00	NBR/FABRIC	PRV-861
P380828501	101.60	82.50	10.30	9.30	FKM/FABRIC	PRV-1048
P380908301	110.00	90.00	12.40	11.40	NBR/FABRIC	PRV-564
P380958301	115.00	95.00	15.00	14.00	NBR/FABRIC	SRV-1076
P381808501	200.00	180.00	15.00	14.00	FKM/FABRIC	PRV-436
P382808501	300.00	280.00	15.00	14.00	FKM/FABRIC	SUM-442
P382808501	300.00	280.00	15.00	14.00	FKM/FABRIC	PRV-1107

Bold sizes are readily available in stock.
Other materials are available on request.

P45

Double Acting Piston Composite Seal

DETAILS

P45 is a double acting piston seal suitable for light to medium duty hydraulic cylinders & suitable for cylinders with small groove dimensions thus enabling a compact piston. The P45 is a combination of O-ring energiser and outer seal ring made of PTFE added with a filler to increase the resistance of seal ring to high pressure. Generally, Bronze is the used as filler. But, Glass/Graphite filled PTFE seal can also be made.

The P45 seal can be easily mounted on a single piece piston and is also suitable for two-piece piston application. The Bronze filled PTFE outer seal ring, when in contact the cylinder bore, the PTFE ensures a stick slip free movement and reduces friction to a minimum. The filler increases the strength in the seal ring to prevent it from extruding and to withstand pressures as high as 400 BAR.

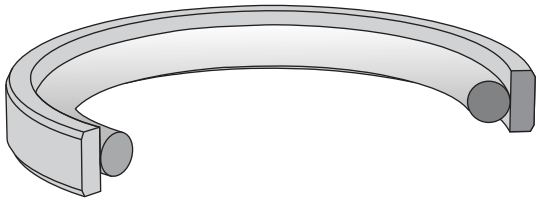

COMPATIBILITY

Mineral oils, bio oils, water soluble & water glycol fluids.

MATERIAL

Sealing Ring : Bronze filled PTFE
O Ring : Nitrile Rubber 70/75 Shore A
FKM 70/75 Shore A

APPLICATION

Application Presses, agricultural machinery, injection moulding machines, mills, marine hydraulics, industrial vehicles, cranes, handling equipment, control and regulation equipment.

OPERATING CONDITIONS

Temperature Range : -30°C to + 100°C (NBR)
-30°C to + 220°C (FKM)
Pressure : 400 Bar
Speed : 10.0 m/s

FEATURES

- Well proven design.
- Self-lubricating seal ring.
- High surface speed.
- Friction at minimum.
- Compact piston.
- Any size upto 1200mm available on request.

SURFACE ROUGHNESS

Static : 1.6 µmRa
Dynamic : 0.4 µmRa

INSTALLATION & ASSEMBLY

Refer to page no. 25 for installation & assembly of P45 piston seal.

PERMISSIBLE EXTRUSION GAP E max (mm)

The maximum permissible extrusion space with one-sided piston position is determined significantly by the maximum operating pressure and the dimensional stability of the seal material.

Bore Diameter D (H9)	Groove Diameter d (h9)	Groove Width L (+0.20)	Permissible Extrusion Gap E Max (in mm)			O Ring Cross Sec. (c/s)
			Pressure 100 Bar	Pressure 200 Bar	Pressure 400 Bar	
8 - 14.90	D - 4.90	2.20	0.30	0.20	0.15	1.78
15 - 39.90	D - 7.50	3.20	0.40	0.25	0.15	2.62
40 - 79.90	D - 11.0	4.20	0.40	0.25	0.20	3.53
80 - 132.90	D - 15.50	6.30	0.50	0.30	0.20	5.33
133 - 329.90	D - 21.00	8.10	0.60	0.35	0.25	6.99
330 - 669.90	D - 24.50	8.10	0.60	0.35	0.25	6.99
670 - 999.90	D - 28.00	9.50	0.70	0.50	0.30	8.40

P45

Double Acting Piston Composite Seal

MAX SPARE LIMITED
QUALITY. PRECISION. SPEED.

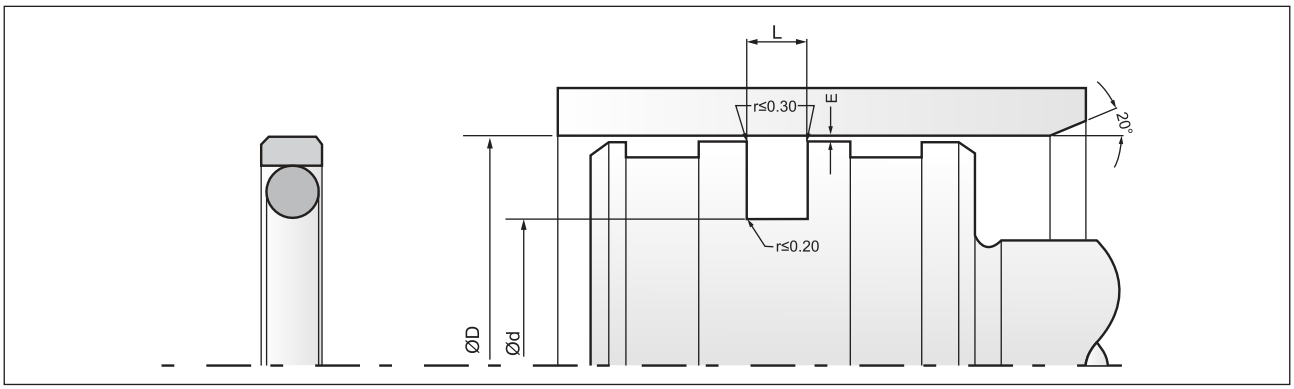

Part No.	D (H9)	d (h9)	L (+0.2)	O-Ring Part No.	Material	Mould No.
P450030801	8.00	3.10	2.20	OR17800257	NBR/BFT	PTA-101
P450030803	8.00	3.90	2.50	OR15000350	NBR/BFT	PTA-699
P450050803	10.00	5.10	2.20	OR17800447	NBR/BFT	PTA-610
P450050801	**10.00**	**5.10**	**2.20**	**OR17800447**	**NBR/BFT**	**PTA-102**
P450056401	10.00	5.10	2.20	OR17800447	FKM/BFT	PTA-552
P450056401	**10.00**	**5.10**	**2.20**	**OR17800447**	**FKM/BFT**	**PTA-225**
P450060801	11.00	6.10	2.20	OR17800528	NBR/BFT	PTA-103
P450070801	**12.00**	**7.10**	**2.20**	**OR17800765**	**NBR/BFT**	**PTA-104**
P450110801	12.20	11.00	2.00	OR17800765	NBR/BFT	PTA-579
P450076404	13.00	7.00	1.50	OR12500600	FKM/BFT	PTA-826
P450080802	13.00	8.60	2.05	OR15000800	NBR/BFT	PTA-550
P450090801	**14.00**	**9.10**	**2.20**	**OR17800873**	**NBR/BFT**	**PTA-105**
P450070802	**15.00**	**7.50**	**3.20**	**OR26200710**	**NBR/BFT**	**PTA-106**
P450076401	15.00	7.50	3.20	OR26200710	FKM/BFT	PTA-428
P450070802	15.00	7.50	3.20	OR26200710	NBR/BFT	PTA-380
P450106403	15.00	10.00	2.20	OR17800925	FKM/BFT	PTA-542
P450086401	16.00	8.50	3.20	OR26200800	FKM/BFT	PTA-434
P450080801	**16.00**	**8.50**	**3.20**	**OR26200800**	**NBR/BFT**	**PTA-107**
P450100805	16.00	10.10	2.40	OR17801242	NBR/BFT	PTA-410
P450100804	16.00	10.50	2.20	OR17801242	NBR/BFT	PTA-489
P450110802	16.00	11.10	2.20	OR17801082	NBR/BFT	PTA-681
P450090802	17.00	9.50	3.20	OR26200919	NBR/BFT	PTA-108
P450100801	**18.00**	**10.50**	**3.20**	**OR26201000**	**NBR/BFT**	**PTA-109**
P450140804	19.00	14.10	2.20	OR17801400	NBR/BFT	PTA-724
P450120801	**20.00**	**12.50**	**3.20**	**OR26201191**	**NBR/BFT**	**PTA-110**
P450126402	20.00	12.50	3.20	OR26201191	FKM/BFT	PTA-444
P450128801	20.00	12.50	3.25	OR26201237	NBR/PU	CS-1452
P450150803	20.00	15.10	2.20	OR17801400	NBR/BFT	PTA-298
P450140801	**22.00**	**14.50**	**3.20**	**OR26201394**	**NBR/BFT**	**PTA-111**
P450146401	**22.00**	**14.50**	**3.20**	**OR26201394**	**FKM/BFT**	**PTA-226**
P450140801	22.00	14.50	3.20	OR26201394	NBR/BFT	PTA-378
P450170803	**22.00**	**17.60**	**2.05**	**OR15001700**	**NBR/BFT**	**PTA-551**
P450180804	22.00	18.25	3.20	OR10001800	NBR/BFT	PTA-697
P450156401	23.00	15.50	3.20	OR26201508	FKM/BFT	PTA-222
P450160801	24.00	16.50	3.20	OR26201588	NBR/BFT	PTA-112
P450146402	**25.00**	**14.00**	**4.20**	**OR35301387**	**FKM/BFT**	**PTA-227**
P450140802	**25.00**	**14.00**	**4.20**	**OR35301387**	**NBR/BFT**	**PTA-114**
P450170801	**25.00**	**17.50**	**3.20**	**OR26201712**	**NBR/BFT**	**PTA-113**
P450176401	**25.00**	**17.50**	**3.20**	**OR26201712**	**FKM/BFT**	**PTA-228**
P450176601	25.00	17.50	3.20	OR26201712	FKM/BFT	PTA-356
P450200802	25.00	20.10	2.20	OR17801877	NBR/BFT	PTA-645
P450180801	**26.00**	**18.50**	**3.20**	**OR26201796**	**NBR/BFT**	**PTA-115**
P450187001	26.20	18.70	3.20	OR26001772	FKM/BFT	PTA-664
P450190801	27.00	19.50	3.20	OR26201872	NBR/BFT	PTA-116
P450196401	27.00	19.50	3.20	OR26201872	FKM/BFT	PTA-641
P450200801	**28.00**	**20.50**	**3.20**	**OR26202029**	**NBR/BFT**	**PTA-117**
P450206401	**28.00**	**20.50**	**3.20**	**OR26202029**	**FKM/BFT**	**PTA-229**
P450210805	28.50	21.00	3.20	OR26202029	NBR/BFT	PTA-477
P450196403	30.00	19.00	4.20	OR35001850	FKM/BFT	PTA-612
P450197101	30.00	19.00	4.20	OR35001850	NBR/BFT	PTA-290
P450227003	30.00	22.50	3.20	OR26202182	NBR/BFT	PTA-340
P450227002	30.00	22.50	3.20	OR26202189	FKM/BFT	PTA-351

Part No.	D (H9)	d (h9)	L (+0.2)	O-Ring Part No.	Material	Mould No.
P450226403	30.00	22.50	3.20	OR26202189	FKM/BFT	PTA-473
P450220801	**30.00**	**22.50**	**3.20**	**OR26202189**	**NBR/BFT**	**PTA-118**
P450226401	**30.00**	**22.50**	**3.20**	**OR26202189**	**FKM/BFT**	**PTA-230**
P450250809	30.00	25.32	3.20	OR15002500	NBR/BFT	PTA-698
P450200803	31.00	20.00	4.20	OR35001900	NBR/BFT	PTA-548
P450210801	32.00	21.00	4.20	OR35302022	NBR/BFT	PTA-374
P450230804	32.00	23.00	2.30	OR18002200	NBR/BFT	PTA-529
P450247008	32.00	24.40	3.80	OR26202347	NBR/BFT	PTA-683
P450246401	**32.00**	**24.50**	**3.20**	**OR26202347**	**FKM/BFT**	**PTA-231**
P450246401	32.00	24.50	3.20	OR26202347	FKM/BFT	PTA-382
P450240801	**32.00**	**24.50**	**3.20**	**OR26202347**	**NBR/BFT**	**PTA-119**
P450246902	32.50	24.00	3.00	OR26202347	NBR/PTFE	PTA-510
P450260803	33.00	26.00	3.20	OR26202507	NBR/BFT	PTA-437
P450260801	34.00	26.50	3.20	OR26202507	NBR/BFT	PTA-120
P450240808	35.00	24.00	4.20	OR35302339	NBR/BFT	PTA-575
P450260807	35.00	26.60	3.20	OR26202507	NBR/BFT	PTA-831
P450270801	**35.00**	**27.50**	**3.20**	**OR26202664**	**NBR/BFT**	**PTA-121**
P450277003	35.00	27.50	3.20	OR26202664	FKM/BFT	PTA-347
P450276401	**35.00**	**27.50**	**3.20**	**OR26202664**	**FKM/BFT**	**PTA-232**
P450280807	35.00	28.00	3.50	OR25002600	NBR/BFT	PTA-572
P450280808	36.00	28.00	3.00	OR25002800	NBR/BFT	PTA-721
P450286401	**36.00**	**28.50**	**3.20**	**OR26202824**	**FKM/BFT**	**PTA-233**
P450280801	**36.00**	**28.50**	**3.20**	**OR26202824**	**NBR/BFT**	**PTA-122**
P450247005	38.00	24.00	5.50	OR50002200	NBR/BFT	PTA-574
P450300801	**38.00**	**30.50**	**3.20**	**OR26202982**	**NBR/BFT**	**PTA-123**
P450306401	**38.00**	**30.50**	**3.20**	**OR26202982**	**FKM/BFT**	**PTA-234**
P450247006	38.10	24.80	5.40	OR45002400	NBR/BFT	PTA-582
P450250807	38.20	25.00	6.00	OR35002400	NBR/BFT	PTA-481
P450307006	38.50	30.10	3.20	OR26202824	NBR/BFT	PTA-609
P450310801	39.00	31.50	3.20	OR26203142	NBR/BFT	PTA-124
P450290801	**40.00**	**29.00**	**4.20**	**OR35302817**	**NBR/BFT**	**PTA-125**
P450296401	**40.00**	**29.00**	**4.20**	**OR35302817**	**FKM/BFT**	**PTA-235**
P450297003	40.00	29.00	4.20	OR35302817	FKM/BFT	PTA-346
P450296401	40.00	29.00	4.20	OR35302817	FKM/BFT	PTA-400
P450310807	40.00	31.00	4.00	OR30003000	NBR/BFT	PTA-750
P450310806	40.00	31.50	4.00	OR35003000	NBR/BFT	PTA-704
P450320801	40.00	32.50	3.20	OR26203134	NBR/BFT	PTA-731
P450327005	40.00	32.50	3.20	OR26203134	FKM/BFT	PTA-218
P450336401	40.00	33.00	3.20	OR26203134	FKM/BFT	PTA-613
P450330804	40.00	33.00	3.20	OR26203134	NBR/BFT	PTA-729
P450360805	41.00	36.00	2.70	OR26203459	NBR/BFT	PTA-824
P450367002	41.25	36.25	2.50	OR17803465	NBR/BFT	PTA-794
P450310802	42.00	31.00	4.20	OR35302974	NBR/BFT	PTA-381
P450310802	**42.00**	**31.00**	**4.20**	**OR35302974**	**NBR/BFT**	**PTA-126**
P450316402	**42.00**	**31.00**	**4.20**	**OR35302974**	**FKM/BFT**	**PTA-236**
P450346403	42.00	34.00	3.00	OR25003300	FKM/BFT	PTA-593
P450330801	44.00	33.00	4.20	OR35303292	NBR/BFT	PTA-127
P450360801	44.42	36.95	3.20	OR26203617	NBR/BFT	PTA-396
P45034O501	45.00	34.00	4.20	OR35303292	NBR/HYT	PTA-421
P450346402	45.00	34.00	4.20	OR35303292	FKM/BFT	PTA-423
P450340801	**45.00**	**34.00**	**4.20**	**OR35303292**	**NBR/BFT**	**PTA-128**
P450346401	**45.00**	**34.00**	**4.20**	**OR35303292**	**FKM/BFT**	**PTA-237**

Bold sizes are readily available in stock.
Other materials are available on request.

P45

Double Acting Piston Composite Seal

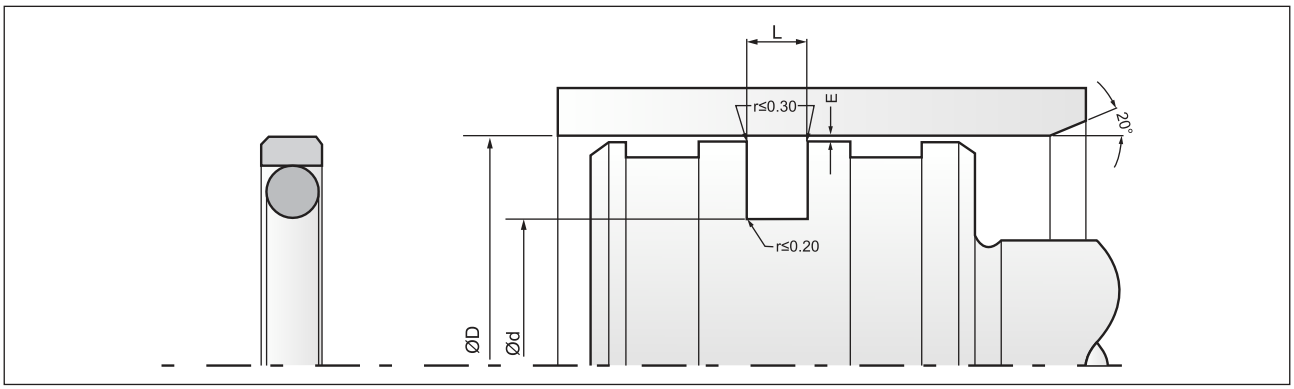

Part No.	D (H9)	d (h9)	L (+0.2)	O-Ring Part No.	Material	Mould No.
P450370805	45.00	37.50	3.20	OR26203617	NBR/BFT	PTA-538
P450380809	45.50	38.00	4.20	OR30003700	NBR/BFT	PTA-718
P450350801	46.00	35.00	4.20	OR35303452	NBR/BFT	PTA-129
P450370801	**48.00**	**37.00**	**4.20**	**OR35303609**	**NBR/BFT**	**PTA-130**
P450376401	**48.00**	**37.00**	**4.20**	**OR35303609**	**FKM/BFT**	**PTA-238**
P450400801	48.00	40.00	4.20	OR30003900	NBR/BFT	PTA-781
P450347003	50.00	34.00	6.00	OR50003300	NBR/BFT	PTA-703
P450340805	50.00	34.50	6.30	OR53303269	NBR/BFT	PTA-457
P450350802	50.00	35.00	6.30	OR53303429	NBR/BFT	PTA-556
P450387014	50.00	38.00	4.20	OR35003700	NBR/BFT	PTA-716
P450397002	50.00	39.00	4.20	OR35303769	FKM/BFT	PTA-345
P450390811	50.00	39.00	4.20	OR35303769	NBR/BFT	PTA-392
P450390810	50.00	39.00	4.20	OR35303769	NBR/BFT	PTA-391
P450396601	50.00	39.00	4.20	OR35303769	FKM/BFT	PTA-401
P450390801	**50.00**	**39.00**	**4.20**	**OR35303769**	**NBR/BFT**	**PTA-131**
P450396401	**50.00**	**39.00**	**4.20**	**OR35303769**	**FKM/BFT**	**PTA-239**
P450396401	50.00	39.00	4.20	OR35303769	FKM/BFT	PTA-359
P450410803	50.00	41.40	3.80	OR30004000	NBR/BFT	PTA-677
P450416402	50.00	41.50	3.80	OR35004000	FKM/BFT	PTA-646
P450410804	50.00	41.50	4.20	OR35004000	NBR/BFT	PTA-680
P450420801	50.00	42.50	3.20	OR26204094	NBR/BFT	PTA-666
P450390806	50.30	39.00	4.20	OR35303769	NBR/BFT	PTA-540
P450390813	50.80	39.37	4.30	OR35003800	NBR/BFT	PTA-700
P450397007	50.80	39.80	4.20	OR35003900	NBR/BFT	PTA-758
P450426402	50.80	42.46	4.20	OR35304087	FKM/CAT	PTA-509
P450440806	50.80	44.05	3.20	OR26204252	NBR/BFT	PTA-691
P450397006	51.00	39.80	4.20	OR35003900	NBR/BFT	PTA-642
P450397004	51.00	39.80	4.20	OR35003900	FKM/BFT	PTA-638
P450387008	52.00	38.00	5.10	OR45003700	FKM/BFT	PTA-501
P450387012	52.00	38.00	5.50	OR47003700	NBR/BFT	PTA-573
P450410801	52.00	41.00	4.20	OR35004000	NBR/BFT	PTA-777
P450410801	52.00	41.00	4.20	OR35004000	NBR/BFT	PTA-132
P450367001	52.20	36.70	6.30	OR55003600	NBR/BFT	PTA-654
P450380808	52.20	38.50	5.40	OR45003750	NBR/BFT	PTA-690
P450380806	52.30	38.00	5.50	OR50003700	NBR/BFT	PTA-371
P450387010	52.32	38.50	5.80	OR53303747	NBR/BFT	PTA-534
P450390808	52.38	39.29	6.00	OR50003800	NBR/BFT	PTA-632
P450387004	52.40	38.60	5.20	OR40003700	NBR/BFT	PTA-448
P450370808	52.50	37.00	5.00	OR40003600	NBR/BFT	PTA-553
P450370807	52.50	37.50	5.50	OR50003700	NBR/BFT	PTA-387
P450420801	53.00	42.00	4.20	OR26204094	NBR/BFT	PTA-133
P450430801	54.00	43.00	4.20	OR35304286	NBR/BFT	PTA-134
P450440801	**55.00**	**44.00**	**4.20**	**OR35304285**	**NBR/BFT**	**PTA-135**
P450446401	55.00	44.00	4.20	OR35304285	FKM/BFT	PTA-617
P450457004	55.00	45.00	5.00	OR40004400	NBR/BFT	PTA-402
P450476402	55.00	47.50	3.20	OR26204729	FKM/BFT	PTA-782
P450406401	55.10	40.00	5.90	OR50004500	FKM/BFT	PTA-712
P450450801	**56.00**	**45.00**	**4.20**	**OR35304470**	**NBR/BFT**	**PTA-136**
P450456601	56.00	45.00	4.20	OR35304470	FKM/BFT	PTA-355
P450460801	57.00	46.00	4.20	OR35004500	NBR/BFT	PTA-137
P450470801	58.00	47.00	4.20	OR35004600	NBR/BFT	PTA-138
P450457002	60.00	45.00	6.30	OR53304382	FKM/BFT	PTA-822

Part No.	D (H9)	d (h9)	L (+0.2)	O-Ring Part No.	Material	Mould No.
P450490803	60.00	49.00	4.20	OR35004900	NBR/BFT	PTA-709
P45049T901	60.00	49.00	4.20	OR35304722	FKM/PTFE	PTA-406
P450496601	60.00	49.00	4.20	OR35304722	FKM/BFT	PTA-353
P450490801	**60.00**	**49.00**	**4.20**	**OR35304722**	**NBR/BFT**	**PTA-139**
P450496401	**60.00**	**49.00**	**4.20**	**OR35304722**	**FKM/BFT**	**PTA-240**
P450496002	60.00	49.00	4.20	OR35304722	NBR+CPU	PTA-455
P450510801	62.00	51.00	4.20	OR35305039	NBR/BFT	PTA-204
P450427001	63.00	42.20	6.80	OR53304064	FKM/BFT	PTA-424
P450476404	**63.00**	**47.50**	**6.30**	**OR53304699**	**FKM/BFT**	**PTA-242**
P450476401	63.00	47.50	6.30	OR53304699	FKM/BFT	PTA-581
P450470804	**63.00**	**47.50**	**6.30**	**OR53304699**	**NBR/BFT**	**PTA-141**
P450496402	63.00	49.00	6.50	OR55004800	FKM/BFT	PTA-808
P450500804	63.00	50.00	5.20	OR40005000	NBR/BFT	PTA-289
P450510809	63.00	51.00	4.20	OR35005000	NBR/BFT	PTA-545
P450510802	63.00	51.80	4.50	OR35005000	NBR/BFT	PTA-717
P45052L501	63.00	52.00	4.20	OR35305039	NBR/PU	CS-1361
P450520801	**63.00**	**52.00**	**4.20**	**OR35305080**	**NBR/BFT**	**PTA-140**
P450526401	63.00	52.00	4.20	OR35305080	FKM/BFT	PTA-360
P450526401	**63.00**	**52.00**	**4.20**	**OR35305080**	**FKM/BFT**	**PTA-241**
P45052L502	63.00	52.00	4.20	OR35305080	NBR/PU	PTA-799
P450526403	63.00	52.00	4.40	OR35005100	FKM/BFT	PTA-679
P450520806	63.00	52.00	6.30	OR45005000	NBR/BFT	PTA-532
P450526402	63.00	52.00	6.30	OR45005000	FKM/BFT	PTA-530
P450547002	63.00	54.00	3.10	OR26205364	NBR/BFT	PTA-414
P450520812	63.50	52.50	3.00	OR26205207	NBR/BFT	PTA-295
P450520813	**63.50**	**52.50**	**4.20**	**OR35305039**	**NBR/BFT**	**PTA-427**
P450537002	63.50	53.57	3.50	OR30005200	NBR/BFT	PTA-753
P450567004	63.50	56.35	3.20	OR26205525	NBR/BFT	PTA-663
P450530801	64.00	53.00	4.20	OR35005200	NBR/BFT	PTA-205
P45053T901	64.00	53.00	4.20	OR35005200	FKM/PTFE	PTA-223
P450517004	65.00	51.00	5.10	OR45005100	FKM/BFT	PTA-500
P450510808	65.00	51.10	5.50	OR45005000	NBR/BFT	PTA-748
P450510810	65.00	51.50	5.50	OR45005100	NBR/BFT	PTA-576
P450510806	65.00	51.70	6.30	OR53305017	NBR/BFT	PTA-633
P450520810	65.00	52.00	5.20	OR45005020	NBR/BFT	PTA-363
P450546404	65.00	54.00	4.20	OR35305357	FKM/CAT	PTA-441
P450540801	**65.00**	**54.00**	**4.20**	**OR35305357**	**NBR/BFT**	**PTA-142**
P450546401	**65.00**	**54.00**	**4.20**	**OR35305357**	**FKM/BFT**	**PTA-243**
P450550802	65.00	55.00	4.00	OR35005400	NBR/BFT	PTA-778
P450517007	65.30	51.80	5.70	OR50005100	NBR/BFT	PTA-776
P450500805	65.50	50.00	6.30	OR57004920	NBR/BFT	PTA-522
P450510804	65.50	51.50	5.80	OR53305017	NBR/BFT	PTA-388
P450510807	65.50	51.75	5.20	OR40005100	NBR/BFT	PTA-695
P450517006	65.50	51.75	5.40	OR40005100	NBR/BFT	PTA-725
P450517002	65.60	51.80	5.20	OR40005000	NBR/BFT	PTA-447
P450517002	65.60	51.80	5.20	OR40005000	NBR/BFT	PTA-449
P450590807	65.90	59.90	5.00	OR45005000	NBR/BFT	PTA-787
P450580805	66.50	58.00	4.00	OR30005700	NBR/BFT	PTA-816
P450567003	67.00	56.00	4.20	OR35005500	NBR/BFT	PTA-827
P450570801	68.00	57.00	4.20	OR35005600	NBR/BFT	PTA-206
P450490802	70.00	49.00	8.10	OR70004800	NBR/BFT	PTA-488
P450546402	**70.00**	**54.50**	**6.30**	**OR53305334**	**FKM/BFT**	**PTA-224**

Bold sizes are readily available in stock.
Other materials are available on request.

P45

Double Acting Piston Composite Seal

MAX SPARE LIMITED
QUALITY. PRECISION. SPEED.

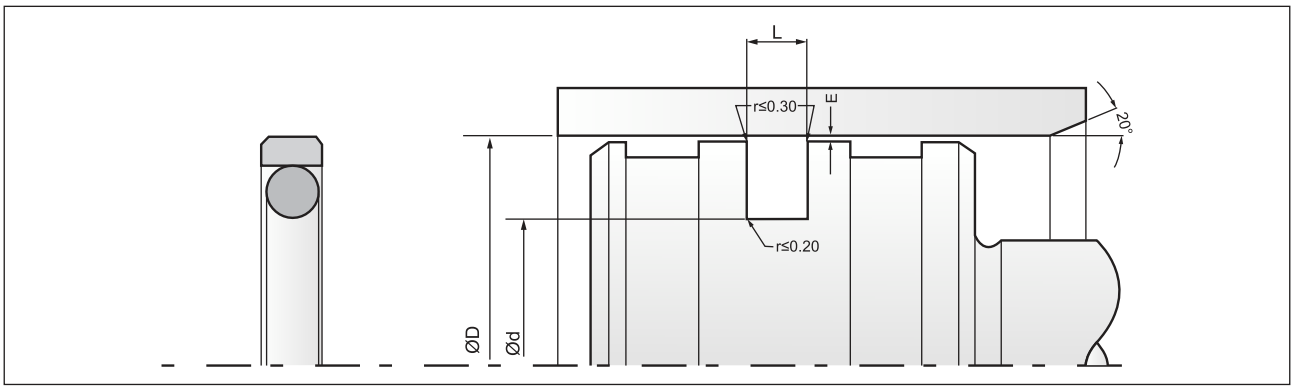

Part No.	D (H9)	d (h9)	L (+0.2)	O-Ring Part No.	Material	Mould No.
P450540802	70.00	54.50	6.30	OR53305334	NBR/BFT	PTA-144
P450580804	70.00	58.50	4.20	OR35305674	NBR/BFT	PTA-740
P450598802	70.00	59.00	4.20	OR35305674	NBR/PU	CS-1504
P450590801	**70.00**	**59.00**	**4.20**	**OR35305674**	**NBR/BFT**	**PTA-143**
P450596401	**70.00**	**59.00**	**4.20**	**OR35305674**	**FKM/BFT**	**PTA-244**
P450596404	70.00	59.00	4.20	OR35305674	FKM/GLT	PTA-591
P450596601	70.00	59.00	4.20	OR35305674	FKM/BFT	PTA-348
P450600804	70.00	60.00	3.50	OR30005950	NBR/BFT	PTA-737
P450620801	70.00	62.50	3.20	OR26206160	NBR/BFT	PTA-440
P450630803	70.50	63.50	3.80	OR35305674	NBR/BFT	PTA-463
P450610802	72.00	61.00	4.20	OR35305992	NBR/BFT	PTA-207
P450610804	73.00	61.80	4.20	OR35006100	NBR/BFT	PTA-859
P45054Q101	75.00	54.00	8.10	OR70005300	NBR/HYT	PTA-860
P450590802	75.00	59.50	6.30	OR53305652	NBR/BFT	PTA-208
P450646403	**75.00**	**64.00**	**4.20**	**OR35306309**	**FKM/BFT**	**PTA-245**
P450640803	**75.00**	**64.00**	**4.20**	**OR35306309**	**NBR/BFT**	**PTA-145**
P450646402	75.00	64.00	4.20	OR35306309	FKM/BFT	PTA-377
P450646601	75.00	64.00	4.20	OR35306309	FKM/BFT	PTA-352
P450650803	75.00	65.00	3.60	OR30006400	NBR/BFT	PTA-366
P450600805	76.00	60.60	6.30	OR53305969	NBR/BFT	PTA-861
P450650815	76.00	65.00	4.20	OR35306400	NBR/BFT	PTA-759
P450600803	76.20	60.00	6.30	OR53305969	NBR/BFT	PTA-555
P450617003	76.20	61.19	6.30	OR53305969	FKM/BFT	PTA-571
P450617004	76.20	61.91	7.00	OR57006150	NBR/BFT	PTA-752
P450637001	76.20	63.50	4.50	OR35306190	NBR/BFT	PTA-715
P450650807	76.20	65.20	4.20	OR35306309	NBR/BFT	PTA-625
P450620802	77.00	62.50	4.90	OR40006200	NBR/BFT	PTA-775
P450660801	77.00	66.00	4.20	OR35306509	NBR/BFT	PTA-209
P450670801	78.20	67.00	4.20	OR35306309	NBR/BFT	PTA-765
P450650809	78.50	65.00	6.30	OR53306287	NBR/BFT	PTA-521
P450650813	78.60	65.10	5.50	OR50006400	NBR/BFT	PTA-636
P450650814	78.70	65.10	5.70	OR50006400	NBR/BFT	PTA-736
P450660805	78.70	66.40	5.00	OR45006500	NBR/BFT	PTA-517
P450720803	78.80	72.60	5.10	OR46006350	NBR/BFT	PTA-362
P450730803	79.30	73.30	5.00	OR47506350	NBR/BFT	PTA-773
P450590803	**80.00**	**59.00**	**8.10**	**OR70005850**	**NBR/BFT**	**PTA-210**
P450596405	80.00	59.00	8.10	OR70005850	FKM/BFT	PTA-694
P450600802	80.00	60.00	8.10	OR70006000	NBR/BFT	PTA-544
P450640812	80.00	64.00	6.50	OR53306287	NBR/BFT	PTA-868
P450640806	80.00	64.00	7.20	OR55006150	NBR/BFT	PTA-738
P450640808	80.00	64.50	6.30	OR53306287	NBR/PU	CS-1442
P45064L501	80.00	64.50	6.30	OR53306287	NBR/PU	PTA-668
P450640801	**80.00**	**64.50**	**6.30**	**OR53306287**	**NBR/BFT**	**PTA-146**
P450646401	**80.00**	**64.50**	**6.30**	**OR53306287**	**FKM/BFT**	**PTA-217**
P450646404	80.00	64.50	6.30	OR53306287	FKM/PTFE	PTA-397
P45064L502	80.00	64.50	6.30	OR53306287	NBR/PU	PTA-801
P450666403	80.00	66.00	6.50	OR57006500	FKM/BFT	PTA-670
P450696403	**80.00**	**69.00**	**4.20**	**OR35306627**	**FKM/BFT**	**PTA-246**
P450690803	**80.00**	**69.00**	**4.20**	**OR35306627**	**NBR/BFT**	**PTA-147**
P450696602	80.00	69.00	4.20	OR35306627	FKM/BFT	PTA-354
P450690804	80.00	69.00	5.20	OR40006700	NBR/BFT	PTA-445
P450696404	80.00	69.00	6.30	OR40006700	FKM/BFT	PTA-531

Part No.	D (H9)	d (h9)	L (+0.2)	O-Ring Part No.	Material	Mould No.
P450700802	80.00	70.00	7.00	OR30006900	NBR/BFT	PTA-515
P450720807	80.00	72.00	4.20	OR35007000	NBR/BFT	PTA-596
P450640810	80.18	64.00	6.30	OR53306287	NBR/BFT	PTA-472
P450640811	80.40	64.50	6.40	OR53306287	NBR/BFT	PTA-671
P450640809	81.00	64.50	6.30	OR53306287	NBR/BFT	PTA-404
P450700803	81.00	70.00	4.20	OR35306944	NBR/BFT	PTA-203
P450720806	83.00	72.00	4.20	OR35007000	NBR/BFT	PTA-511
P450720805	83.00	72.50	3.00	OR26207118	NBR/BFT	PTA-482
P450747002	84.00	74.00	4.00	OR35307262	NBR/BFT	PTA-768
P450640802	85.00	64.00	8.10	OR69906300	NBR/BFT	PTA-211
P450640802	85.00	64.00	8.10	OR69906300	NBR/BFT	CS-1408
P450696601	85.00	69.50	6.30	OR53306922	FKM/BFT	PTA-349
P450696401	**85.00**	**69.50**	**6.30**	**OR53306922**	**FKM/BFT**	**PTA-247**
P450690801	**85.00**	**69.50**	**6.30**	**OR53306922**	**NBR/BFT**	**PTA-148**
P450697302	85.00	69.50	6.30	OR53306922	NBR/CAT	PTA-674
P450740806	85.00	74.00	4.20	OR35307144	NBR/BFT	PTA-588
P450750804	86.00	75.00	4.20	OR35007400	NBR/BFT	PTA-819
P450690802	**90.00**	**69.00**	**8.10**	**OR69906800**	**NBR/BFT**	**PTA-150**
P450696401	90.00	69.00	8.10	OR69906800	FKM/BFT	PTA-342
P450746403	90.00	74.00	6.50	OR53307239	FKM/BFT	PTA-678
P450740801	**90.00**	**74.50**	**6.30**	**OR53307239**	**NBR/BFT**	**PTA-149**
P450746401	**90.00**	**74.50**	**6.30**	**OR53307239**	**FKM/BFT**	**PTA-248**
P450746401	90.00	74.50	6.30	OR53307239	FKM/BFT	PTA-435
P450760801	90.00	76.20	7.50	OR53307557	NBR/BFT	PTA-640
P450780804	90.00	78.70	7.00	OR35007800	NBR/BFT	PTA-648
P450790804	90.00	79.00	4.20	OR35007800	NBR/BFT	PTA-389
P450796602	90.00	79.00	4.20	OR35007800	FKM/BFT	PTA-358
P450790805	90.00	79.00	7.30	OR35007800	NBR/BFT	PTA-746
P450826401	90.00	82.00	5.60	OR30008000	FKM/BFT	PTA-762
P450740802	95.00	74.00	8.10	OR70007300	NBR/BFT	PTA-212
P450796401	**95.00**	**79.50**	**6.30**	**OR69907800**	**FKM/BFT**	**PTA-249**
P450790801	**95.00**	**79.50**	**6.30**	**OR69907800**	**NBR/BFT**	**PTA-151**
P450796601	95.00	79.50	6.30	OR69907800	FKM/BFT	PTA-350
P450796404	95.00	79.50	6.30	OR69907800	FKM/BFT	PTA-726
P450847001	95.00	84.00	4.20	OR35008300	NBR/BFT	PTA-403
P450820801	98.00	82.50	6.30	OR53308192	NBR/BFT	PTA-796
P450837003	98.96	83.50	6.30	OR53308192	NBR/BFT	PTA-779
P450847003	99.00	84.50	6.30	OR53308192	NBR/BFT	PTA-383
P450796402	100.00	79.00	8.10	OR69907800	FKM/BFT	PTA-490
P450790802	**100.00**	**79.00**	**8.10**	**OR69907800**	**NBR/BFT**	**PTA-153**
P450837002	100.00	83.00	6.30	OR53308192	NBR/BFT	PTA-660
P450848801	100.00	84.50	6.30	OR53308192	NBR/PU	CS-1372
P450840801	**100.00**	**84.50**	**6.30**	**OR53308192**	**NBR/BFT**	**PTA-152**
P450846601	100.00	84.50	6.30	OR53308192	FKM/BFT	PTA-357
P450846403	100.00	84.50	6.30	OR53308192	FKM/CAT	PTA-443
P450846401	**100.00**	**84.50**	**6.30**	**OR53308192**	**FKM/BFT**	**PTA-214**
P45084L501	100.00	84.50	6.30	OR53308192	NBR/PU	PTA-867
P450866402	100.00	86.00	6.30	OR53308509	FKM/BFT	PTA-647
P450887004	100.00	88.80	4.20	OR35008600	NBR/BFT	PTA-577
P450890803	100.00	89.00	4.20	OR35308827	NBR/BFT	PTA-652
P450850801	101.60	85.60	6.00	OR53308509	NBR/BFT	PTA-708
P450857004	101.60	85.72	7.00	OR57008460	NBR/BFT	PTA-754

Bold sizes are readily available in stock.
Other materials are available on request.

P45

Double Acting Piston Composite Seal

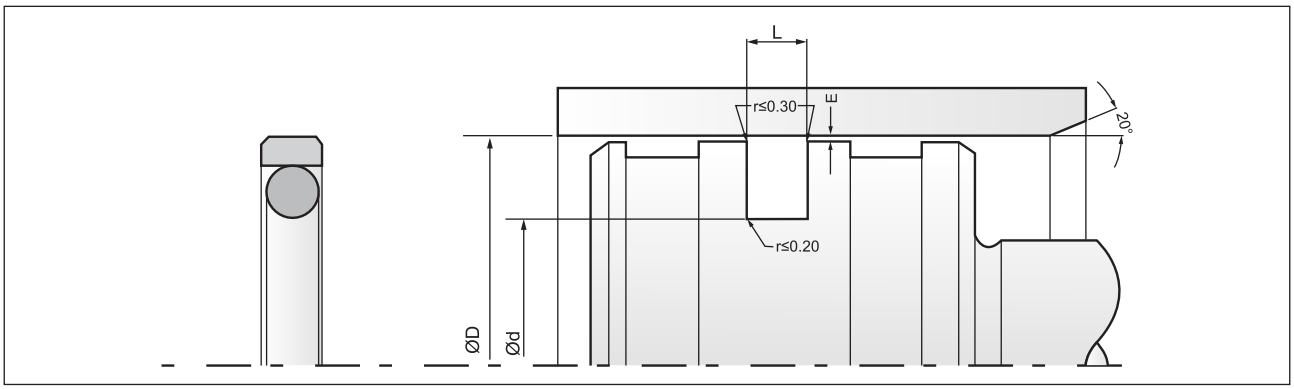

Part No.	D (H9)	d (h9)	L (+0.2)	O-Ring Part No.	Material	Mould No.
P450850803	101.60	85.90	6.30	OR53308509	NBR/BFT	PTA-696
P450867001	101.60	86.10	6.30	OR53308509	NBR/BFT	PTA-533
P450910804	101.60	91.00	4.20	OR35009000	NBR/BFT	PTA-780
P450860804	102.00	86.10	6.30	OR53308509	NBR/BFT	PTA-639
P450860803	102.00	86.50	6.30	OR53308509	NBR/BFT	PTA-469
P450840802	105.00	84.00	8.10	OR70008300	NBR/BFT	PTA-213
P450880803	105.00	88.90	6.50	OR53308827	NBR/BFT	PTA-657
P450890801	**105.00**	**89.50**	**6.30**	**OR53308827**	**NBR/BFT**	**PTA-154**
P450896401	**105.00**	**89.50**	**6.30**	**OR53308827**	**FKM/BFT**	**PTA-250**
P450910803	105.00	91.00	6.30	OR53308969	NBR/BFT	PTA-739
P450930803	105.10	93.00	6.30	OR50009200	NBR/BFT	PTA-783
P450987003	105.40	98.20	6.00	OR53308827	NBR/BFT	PTA-594
P450887005	105.45	88.50	7.10	OR60008800	NBR/BFT	PTA-635
P450840809	105.50	84.50	8.10	OR70008400	NBR/BFT	PTA-741
P450890805	105.50	89.50	7.00	OR53308827	NBR/BFT	PTA-611
P450880802	105.80	88.70	6.30	OR53308827	NBR/BFT	PTA-637
P450960802	106.00	96.00	6.00	OR40009400	NBR/BFT	PTA-292
P450980802	106.30	98.70	6.00	OR55008700	NBR/BFT	PTA-772
P450887006	108.30	88.20	6.30	OR53308700	NBR/BFT	PTA-784
P450890802	**110.00**	**89.00**	**8.10**	**OR69908800**	**NBR/BFT**	**PTA-156**
P450940801	**110.00**	**94.50**	**6.30**	**OR53309144**	**NBR/BFT**	**PTA-155**
P450946402	**110.00**	**94.50**	**6.30**	**OR53309144**	**FKM/BFT**	**PTA-251**
P450990808	110.00	99.00	4.00	OR35009600	NBR/BFT	PTA-629
P450990807	110.00	99.00	4.20	OR35309802	NBR/BFT	PTA-491
P450990806	112.00	99.50	6.30	OR50009800	NBR/BFT	PTA-475
P451040805	114.30	104.78	3.20	OR25010200	NBR/PTFE	PTA-722
P450930802	114.50	93.50	7.00	OR60009200	NBR/BFT	PTA-628
P450940803	**115.00**	**94.00**	**8.10**	**OR69909100**	**NBR/BFT**	**PTA-219**
P450946403	115.00	94.00	8.10	OR69909100	FKM/BFT	PTA-710
P450990801	**115.00**	**99.50**	**6.30**	**OR53309779**	**NBR/BFT**	**PTA-157**
P450996401	**115.00**	**99.50**	**6.30**	**OR53309779**	**FKM/BFT**	**PTA-252**
P45099L501	115.00	99.50	6.30	OR53309779	NBR/PU	PTA-792
P450990805	115.00	99.90	6.30	OR53309779	NBR/BFT	PTA-369
P451030803	115.00	103.70	7.00	OR35010000	NBR/BFT	PTA-650
P451040804	119.00	104.50	6.30	OR69909100	NBR/BFT	PTA-547
P450990802	**120.00**	**99.00**	**8.10**	**OR69909800**	**NBR/BFT**	**PTA-160**
P450996402	120.00	99.00	8.10	OR69909800	FKM/BFT	PTA-506
P451046402	**120.00**	**104.50**	**6.30**	**OR53310414**	**FKM/BFT**	**PTA-253**
P451040801	**120.00**	**104.50**	**6.30**	**OR53310414**	**NBR/BFT**	**PTA-159**
P451097004	120.00	109.50	4.20	OR35310754	NBR/BFT	PTA-667
P451050806	121.00	105.50	6.30	OR53310414	NBR/BFT	PTA-634
P451040802	**125.00**	**104.00**	**8.10**	**OR69910300**	**NBR/BFT**	**PTA-162**
P451046401	125.00	104.00	8.10	OR69910300	FKM/BFT	PTA-344
P451040802	125.00	104.00	8.10	OR69910300	NBR/BFT	PTA-384
P451046401	125.00	104.00	8.10	OR69910300	FKM/BFT	PTA-454
P451050805	125.00	105.00	8.10	OR69910300	NBR/BFT	PTA-158
P45109L501	125.00	109.50	6.30	OR53310732	NBR/PU	PTA-803
P451096401	**125.00**	**109.50**	**6.30**	**OR53310732**	**FKM/BFT**	**PTA-254**
P451090801	**125.00**	**109.50**	**6.30**	**OR53310732**	**NBR/BFT**	**PTA-161**
P451097002	125.00	109.50	6.30	OR53310732	NBR/BFT	PTA-462
P451096404	125.00	109.50	10.00	OR64010800	FKM/BFT	PTA-719
P45109K201	125.00	109.50	13.50	OR533010732	NBR/BFT	PTA-749

Part No.	D (H9)	d (h9)	L (+0.2)	O-Ring Part No.	Material	Mould No.
P451157002	125.00	115.30	4.20	OR35311389	NBR/BFT	PTA-866
P451150801	125.00	115.30	4.50	OR35311389	NBR/BFT	PTA-616
P451160801	125.00	116.00	6.00	OR26211397	NBR/BFT	PTA-562
P451080801	125.50	108.00	6.30	OR53310732	NBR/BFT	PTA-873
P451090805	126.00	109.50	6.30	OR53310732	NBR/BFT	PTA-682
P451027002	127.00	102.00	8.10	OR70010000	NBR/BFT	PTA-554
P451060803	127.00	106.00	7.00	OR60010300	NBR/BFT	PTA-627
P451110803	127.00	111.13	6.30	OR53311049	NBR/BFT	PTA-546
P451110802	127.00	111.50	6.30	OR53311049	NBR/BFT	PTA-416
P451160802	127.00	116.20	4.20	OR35011500	NBR/BFT	PTA-662
P451177001	127.00	117.50	3.20	OR25011500	NBR/BFT	PTA-580
P451170805	127.00	117.60	3.20	OR27011500	NBR/BFT	PTA-578
P451190805	128.00	119.00	3.20	OR25011700	NBR/BFT	PTA-293
P451096403	**130.00**	**109.00**	**8.10**	**OR69910800**	**FKM/BFT**	**PTA-255**
P451090803	**130.00**	**109.00**	**8.10**	**OR69910800**	**NBR/BFT**	**PTA-164**
P451120803	130.00	112.00	6.30	OR53311049	NBR/BFT	PTA-818
P451140801	**130.00**	**114.50**	**6.30**	**OR53311367**	**NBR/BFT**	**PTA-163**
P451147002	130.00	114.50	6.30	OR53311367	FKM/BFT	PTA-461
P451146401	**130.00**	**114.50**	**6.30**	**OR53311369**	**FKM/BFT**	**PTA-256**
P451150802	130.00	115.60	7.00	OR45011300	NBR/BFT	PTA-686
P451147004	130.05	114.00	6.50	OR53311389	NBR/BFT	PTA-656
P451177002	133.00	117.00	7.30	OR69911684	NBR/BFT	PTA-732
P451140802	**135.00**	**114.00**	**8.10**	**OR69911200**	**NBR/BFT**	**PTA-165**
P451180801	135.00	118.00	7.50	OR69911684	NBR/BFT	PTA-813
P451196402	140.00	119.00	8.00	OR69911684	FKM/BFT	PTA-549
P451190801	**140.00**	**119.00**	**8.10**	**OR69911684**	**NBR/BFT**	**PTA-166**
P451196401	**140.00**	**119.00**	**8.10**	**OR69911684**	**FKM/BFT**	**PTA-257**
P451196401	140.00	119.00	8.10	OR69911684	FKM/BFT	PTA-375
P451240802	**140.00**	**124.50**	**6.30**	**OR53312319**	**NBR/BFT**	**PTA-167**
P451240804	140.00	124.50	6.30	OR53312319	NBR/BFT	PTA-688
P451246402	**140.00**	**124.50**	**6.30**	**OR53312319**	**FKM/BFT**	**PTA-258**
P451200805	141.00	120.00	8.10	OR69911684	NBR/BFT	PTA-791
P451190806	142.60	119.00	8.10	OR70011800	NBR/BFT	PTA-786
P451246401	**145.00**	**124.00**	**8.10**	**OR69912319**	**FKM/BFT**	**PTA-259**
P451240801	**145.00**	**124.00**	**8.10**	**OR69912319**	**NBR/BFT**	**PTA-168**
P451246401	145.00	124.00	8.10	OR69912319	FKM/BFT	PTA-727
P451290803	**145.00**	**129.50**	**6.30**	**OR53312637**	**NBR/BFT**	**PTA-220**
P451296403	**145.00**	**129.50**	**6.30**	**OR53312637**	**FKM/BFT**	**PTA-260**
P451260802	146.15	126.50	9.80	OR70012500	NBR/BFT	PTA-714
P451296401	**150.00**	**129.00**	**8.10**	**OR69912636**	**FKM/BFT**	**PTA-261**
P451296401	150.00	129.00	8.10	OR69912636	FKM/BFT	PTA-386
P451290601	150.00	129.00	8.10	OR69912636	NBR/BFT	PTA-438
P451290801	**150.00**	**129.00**	**8.10**	**OR69912636**	**NBR/BFT**	**PTA-169**
P451330801	150.00	133.00	6.00	OR53313272	NBR/BFT	PTA-743
P451340802	**150.00**	**134.50**	**6.30**	**OR53313272**	**NBR/BFT**	**PTA-170**
P451340804	150.00	134.50	6.30	OR53313272	NBR/PU	PUF-367
P451346402	**150.00**	**134.50**	**6.30**	**OR53313272**	**FKM/BFT**	**PTA-262**
P451346402	150.00	134.50	6.30	OR53313272	FKM/BFT	PTA-367
P451390803	150.00	139.00	4.20	OR35313700	NBR/BFT	PTA-215
P451420802	151.70	142.00	4.20	OR30014000	NBR/BFT	PTA-513
P451300802	152.00	130.00	8.10	OR70012800	NBR/BFT	PTA-661
P451310801	152.40	131.40	8.10	OR69912954	NBR/BFT	PTA-479

Bold sizes are readily available in stock.
Other materials are available on request.

P45

Double Acting Piston Composite Seal

MAX SPARE LIMITED
QUALITY. PRECISION. SPEED.

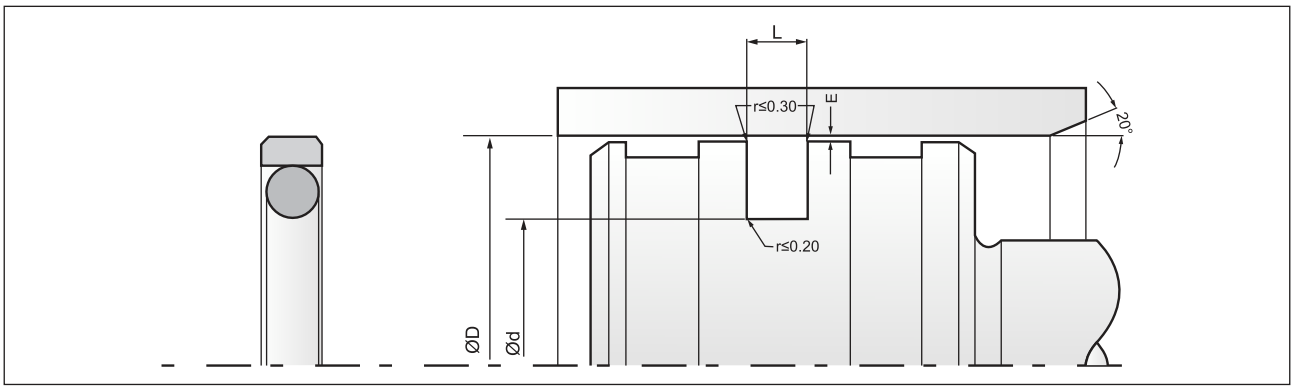

Part No.	D (H9)	d (h9)	L (+0.2)	O-Ring Part No.	Material	Mould No.
P451340805	152.40	134.40	6.30	OR53313272	NBR/BFT	PTA-707
P451397006	152.40	139.70	3.60	OR35313500	NBR/BFT	PTA-408
P451397005	152.40	139.70	4.20	OR35313929	NBR/BFT	PTA-294
P451390808	152.40	139.70	12.70	OR50013800	NBR/BFT	PTA-836
P451346401	**155.00**	**134.00**	**8.10**	**OR69913272**	**FKM/BFT**	**PTA-263**
P451340801	**155.00**	**134.00**	**8.10**	**OR69913272**	**NBR/BFT**	**PTA-171**
P451420801	155.00	142.40	4.20	OR35014000	NBR/BFT	PTA-422
P451396404	160.00	139.00	7.70	OR69913589	FKM/BFT	PTA-713
P451390801	**160.00**	**139.00**	**8.10**	**OR69913589**	**NBR/BFT**	**PTA-172**
P451396401	**160.00**	**139.00**	**8.10**	**OR69913589**	**FKM/BFT**	**PTA-264**
P451396701	160.00	139.00	8.10	OR69913589	FKM/BFT	PTA-464
P451440804	160.00	144.00	6.50	OR53314224	NBR/BFT	PTA-658
P451446402	**160.00**	**144.50**	**6.30**	**OR53314224**	**FKM/BFT**	**PTA-265**
P451440802	**160.00**	**144.50**	**6.30**	**OR53314224**	**NBR/BFT**	**PTA-173**
P451440805	160.00	144.60	6.50	OR53314224	NBR/BFT	PTA-672
P451490802	160.00	149.00	4.20	OR35014700	NBR/BFT	PTA-216
P451490806	160.00	149.50	7.00	OR30014800	NBR/BFT	PTA-561
P451457001	160.05	145.00	6.50	OR53314224	NBR/BFT	PTA-655
P451410801	162.50	141.50	8.10	OR69913907	NBR/BFT	PTA-770
P451460803	162.50	146.42	6.30	OR53314542	NBR/BFT	PTA-480
P451440801	**165.00**	**144.00**	**8.10**	**OR69914224**	**NBR/BFT**	**PTA-174**
P451446401	**165.00**	**144.00**	**8.10**	**OR69914224**	**FKM/BFT**	**PTA-266**
P451500801	165.00	150.00	6.30	OR53314542	NBR/BFT	PTA-790
P451630801	166.00	163.00	7.60	OR70014600	NBR/BFT	PTA-587
P451490801	**170.00**	**149.00**	**8.10**	**OR69914859**	**NBR/BFT**	**PTA-175**
P451496401	**170.00**	**149.00**	**8.10**	**OR69914859**	**FKM/BFT**	**PTA-267**
P451540803	170.00	154.50	9.20	OR53315177	NBR/BFT	PTA-649
P451590804	170.00	159.00	4.20	OR35315834	NBR/BFT	PTA-760
P451520801	173.00	152.00	8.10	OR69915177	NBR/BFT	PTA-478
P451540801	**175.00**	**154.00**	**8.10**	**OR69915177**	**NBR/BFT**	**PTA-176**
P451546401	175.00	154.00	8.10	OR69915177	FKM/BFT	PTA-865
P451606401	175.00	160.00	6.60	OR53315812	FKM/BFT	PTA-701
P451550801	177.00	155.00	8.10	OR69915400	NBR/BFT	PTA-565
P451650801	178.20	165.00	4.30	OR35016300	NBR/BFT	PTA-373
P451660801	179.50	166.50	4.00	OR35316469	NBR/BFT	PTA-528
P451590801	**180.00**	**159.00**	**8.10**	**OR69915812**	**NBR/BFT**	**PTA-177**
P451596401	180.00	159.00	8.10	OR69915812	FKM/BFT	PTA-341
P451590802	180.00	159.50	8.10	OR69915812	NBR/BFT	PTA-413
P451646402	**180.00**	**164.50**	**6.30**	**OR53316447**	**FKM/BFT**	**PTA-269**
P451646402	**180.00**	**164.50**	**6.30**	**OR53316447**	**FKM/BFT**	**PTA-268**
P451640802	**180.00**	**164.50**	**6.30**	**OR53316447**	**NBR/BFT**	**PTA-178**
P451640801	**185.00**	**164.00**	**8.10**	**OR69916129**	**NBR/BFT**	**PTA-179**
P451700802	185.00	170.00	6.60	OR60016800	NBR/BFT	PTA-520
P451690801	**190.00**	**169.00**	**8.10**	**OR69916447**	**NBR/BFT**	**PTA-180**
P451700803	190.00	170.50	9.50	OR84016910	NBR/BFT	PTA-804
P451766401	192.00	176.50	6.30	OR69917082	FKM/BFT	PTA-757
P451720801	193.00	172.00	8.10	OR69917082	NBR/BFT	PTA-507
P451740801	**195.00**	**174.00**	**8.10**	**OR69917082**	**NBR/BFT**	**PTA-181**
P451760801	200.00	176.00	8.20	OR69917082	NBR/BFT	PTA-512
P451777001	200.00	177.00	7.90	OR70017460	NBR/BFT	PTA-795
P451796401	200.00	179.00	8.10	OR69917717	FKM/BFT	PTA-343
P451790801	**200.00**	**179.00**	**8.10**	**OR69917717**	**NBR/BFT**	**PTA-182**

Part No.	D (H9)	d (h9)	L (+0.2)	O-Ring Part No.	Material	Mould No.
P45179L501	200.00	179.00	8.10	OR69917717	NBR/PU	PTA-800
P451840801	**200.00**	**184.50**	**6.30**	**OR53318352**	**NBR/BFT**	**PTA-183**
P451846401	**200.00**	**184.50**	**6.30**	**OR53318352**	**FKM/BFT**	**PTA-270**
P451890802	200.00	189.50	7.00	OR30018800	NBR/BFT	PTA-560
P451797003	200.50	179.50	8.10	OR69917717	FKM/BFT	PTA-785
P451807002	202.00	180.00	8.10	OR69917717	NBR/BFT	PTA-543
P451827001	203.00	182.00	8.10	OR70018000	NBR/BFT	PTA-411
P451780801	203.20	178.00	7.80	OR69917717	NBR/BFT	PTA-599
P451827003	203.20	182.19	8.10	OR70018060	FKM/BFT	PTA-537
P451820802	203.20	182.19	9.52	OR75018000	NBR/BFT	PTA-659
P451830801	203.20	183.35	9.52	OR80018000	NBR/BFT	PTA-820
P451847001	205.00	184.05	8.10	OR70018060	NBR/BFT	PTA-361
P451846402	205.00	184.50	8.10	OR69918352	FKM/BFT	PTA-564
P451890803	205.00	189.30	9.20	OR53018600	NBR/BFT	PTA-651
P451870801	208.00	187.00	8.50	OR69918352	NBR/BFT	PTA-451
P451870802	208.00	187.70	8.10	OR69918352	NBR/BFT	PTA-372
P451870804	208.60	187.60	8.10	OR69918352	NBR/BFT	PTA-493
P451890801	**210.00**	**189.00**	**8.10**	**OR69918644**	**NBR/BFT**	**PTA-184**
P451896401	210.00	189.00	8.10	OR69918644	FKM/BFT	PTA-798
P451950803	210.00	195.00	6.30	OR53319260	NBR/BFT	PTA-793
P451990801	**220.00**	**199.00**	**8.10**	**OR69919622**	**NBR/BFT**	**PTA-185**
P451996401	220.00	199.00	8.10	OR69919622	FKM/BFT	PTA-291
P452000801	220.00	200.00	7.50	OR60019700	NBR/BFT	PTA-812
P451990802	221.00	199.00	8.10	OR69919622	NBR/BFT	PTA-436
P452010801	222.00	201.00	8.10	OR70019800	NBR/BFT	PTA-431
P452030801	224.00	203.00	8.10	OR69920000	NBR/BFT	PTA-492
P452040802	**225.00**	**204.00**	**8.10**	**OR70020100**	**NBR/BFT**	**PTA-186**
P452046401	225.00	204.00	8.10	OR70020100	FKM/BFT	PTA-810
P452167001	226.20	216.50	7.90	OR69920257	FKM/BFT	PTA-774
P452126401	228.00	212.50	6.30	OR53320892	FKM/BFT	PTA-756
P452090801	230.00	209.00	8.10	OR69920257	NBR/BFT	PTA-733
P452090801	**230.00**	**209.00**	**8.10**	**OR69920257**	**NBR/BFT**	**PTA-187**
P452096401	230.00	209.00	8.10	OR69920257	FKM/BFT	PTA-368
P452140803	230.00	214.90	6.30	OR50021000	NBR/BFT	PTA-505
P452160801	230.00	216.50	3.57	OR30021200	NBR/BFT	PTA-527
P452197001	230.00	219.00	4.20	OR35321549	NBR/BFT	PTA-393
P452190801	**240.00**	**219.00**	**8.10**	**OR69921800**	**NBR/BFT**	**PTA-188**
P452196401	240.00	219.00	8.10	OR70021600	FKM/BFT	PTA-446
P452297001	240.00	229.00	4.20	OR35322819	NBR/BFT	PTA-394
P452317001	241.30	231.00	3.50	OR30023000	NBR/BFT	PTA-296
P452240803	245.00	224.00	8.10	OR70022160	NBR/BFT	PTA-605
P452240802	250.00	224.00	8.10	OR69922797	NBR/BFT	PTA-453
P452296401	250.00	229.00	8.10	OR69922797	FKM/BFT	PTA-365
P452290801	**250.00**	**229.00**	**8.10**	**OR69922797**	**NBR/BFT**	**PTA-189**
P452290803	250.00	229.00	8.10	OR69922797	NBR/BFT	PTA-567
P452290803	250.00	229.00	8.10	OR69922797	NBR/BFT	PTA-568
P452350801	250.00	235.00	6.00	OR53323400	NBR/BFT	PTA-221
P452380802	250.00	238.00	7.50	OR32023495	NBR/BFT	PTA-559
P452330802	254.00	233.00	8.10	OR69922797	NBR/BFT	PTA-745
P452380801	254.00	238.52	4.00	OR35023776	NBR/BFT	PTA-526
P452340802	**255.00**	**234.00**	**8.10**	**OR70023000**	**NBR/BFT**	**PTA-429**
P452346402	255.00	234.00	8.10	OR70023000	FKM/BFT	PTA-502

Bold sizes are readily available in stock.
Other materials are available on request.

P45

Double Acting Piston Composite Seal

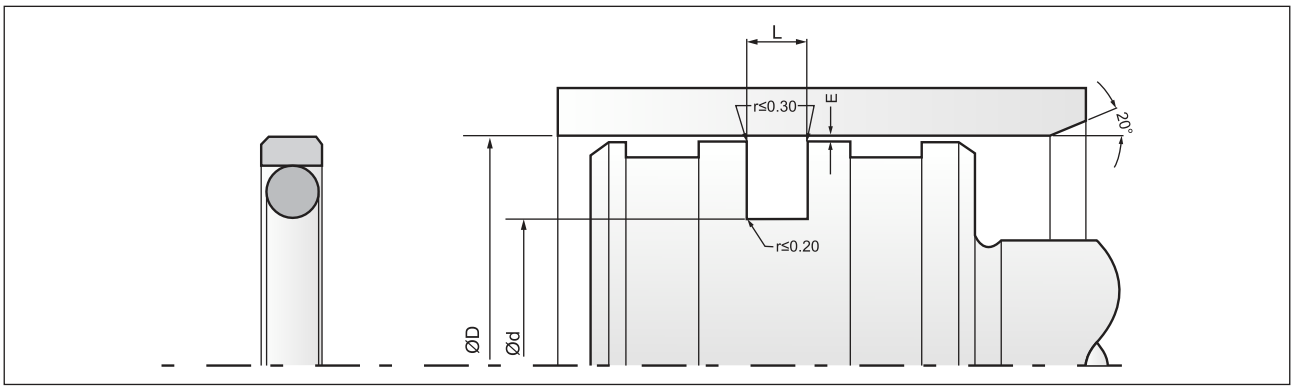

Part No.	D (H9)	d (h9)	L (+0.2)	O-Ring Part No.	Material	Mould No.
P452320801	257.17	232.96	8.10	OR70023000	NBR/BFT	PTA-872
P452390801	**260.00**	**239.00**	**8.10**	**OR69923600**	**NBR/BFT**	**PTA-190**
P452497002	260.00	249.00	4.20	OR35324724	NBR/BFT	PTA-395
P452410801	262.00	241.00	8.10	OR70023800	NBR/BFT	PTA-630
P452440804	265.00	244.00	8.10	OR69924067	NBR/BFT	PTA-706
P452490801	**270.00**	**249.00**	**8.10**	**OR69924067**	**NBR/BFT**	**PTA-191**
P452497001	270.00	249.00	8.10	OR69924067	NBR/BFT	PTA-734
P452540802	270.00	254.50	6.30	OR50025000	NBR/BFT	PTA-376
P452540801	275.00	254.00	8.10	OR69925337	NBR/BFT	PTA-419
P452560802	280.00	256.40	8.10	OR69925337	NBR/BFT	PTA-407
P452596401	280.00	259.00	8.10	OR69925337	NBR/BFT	PTA-687
P452590801	**280.00**	**259.00**	**8.10**	**OR69925337**	**NBR/BFT**	**PTA-192**
P452630804	284.50	263.50	8.10	OR70025960	NBR/BFT	PTA-742
P452640801	285.00	264.00	8.10	OR70025960	NBR/BFT	PTA-603
P452690801	**290.00**	**269.00**	**8.10**	**OR69926600**	**NBR/BFT**	**PTA-193**
P452710805	295.00	271.10	8.10	OR69926607	NBR/BFT	PTA-595
P452740801	298.00	274.10	8.10	OR70027170	NBR/BFT	PTA-439
P452760801	300.00	276.00	8.10	OR70027500	NBR/BFT	PTA-418
P452790801	**300.00**	**279.00**	**8.10**	**OR69927750**	**NBR/BFT**	**PTA-194**
P452790804	300.00	279.00	8.10	OR69927750	NBR/BFT	PTA-466
P452796401	300.00	279.00	8.10	OR69927750	FKM/BFT	PTA-364
P452870801	300.00	287.80	7.50	OR30028500	NBR/BFT	PTA-563
P452800804	301.00	280.00	8.10	OR69927877	NBR/BFT	PTA-870
P452830801	304.80	283.80	9.52	OR75028000	NBR/BFT	PTA-426
P452900801	305.00	290.00	8.10	OR70028800	NBR/BFT	PTA-771
P452840805	305.10	284.10	8.10	OR70028000	NBR/BFT	PTA-789
P452840804	305.60	284.60	8.10	OR70028000	NBR/BFT	PTA-788
P452850803	310.00	285.00	8.00	OR70028000	NBR/BFT	PTA-817
P452850802	310.00	285.50	8.10	OR70028200	NBR/BFT	PTA-711
P452890801	310.00	289.00	8.10	OR70028500	NBR/BFT	PTA-271
P452950801	320.00	295.50	8.10	OR70029200	NBR/BFT	PTA-821
P452956401	320.00	295.50	8.10	OR70029200	FKM/BFT	PTA-806
P452960802	320.00	296.00	8.10	OR70029200	NBR/BFT	PTA-869
P452990801	**320.00**	**299.00**	**8.10**	**OR69929750**	**NBR/BFT**	**PTA-195**
P452997001	320.00	299.00	8.10	OR70029600	NBR/BFT	PTA-619
P452996401	320.00	299.00	8.10	OR70029600	FKM/BFT	PTA-606
P453010801	325.00	301.00	8.10	OR69929750	NBR/BFT	PTA-399
P453047001	325.00	304.00	8.10	OR69930000	NBR/BFT	PTA-685
P453076401	328.00	307.00	8.10	OR70030200	FKM/BFT	PTA-764
P453050801	330.00	305.50	8.10	OR69930417	FKM/BFT	PTA-524
P453057001	330.00	305.50	8.10	OR69930417	FKM/BFT	PTA-272
P453060801	330.00	306.60	8.10	OR70030270	NBR/BFT	PTA-468
P453100801	335.00	310.00	8.10	OR70030670	NBR/BFT	PTA-433
P453150804	340.00	315.00	8.10	OR70031200	NBR/BFT	PTA-814
P453157001	340.00	315.50	8.10	OR69931400	NBR/BFT	PTA-417
P453150801	340.00	315.50	8.10	OR69931400	NBR/BFT	PTA-273
P453150801	340.00	315.50	8.10	OR69931400	NBR/PU	PTA-405
P453250802	350.00	325.00	8.10	OR70032000	NBR/BFT	PTA-514
P453256401	350.00	325.50	8.10	OR69931687	FKM/BFT	PTA-525
P453250801	**350.00**	**325.50**	**8.10**	**OR69931687**	**NBR/BFT**	**PTA-541**
P453266401	350.00	326.00	8.10	OR70032200	FKM/BFT	PTA-631
P453370801	350.00	337.80	7.50	OR30033400	NBR/BFT	PTA-558

Part No.	D (H9)	d (h9)	L (+0.2)	O-Ring Part No.	Material	Mould No.
P453260802	351.00	326.00	8.10	OR70032000	NBR/BFT	PTA-460
P453256403	353.00	325.00	8.10	OR70032000	FKM/BFT	PTA-539
P453300802	355.00	330.00	8.10	OR70032700	NBR/BFT	PTA-601
P453300804	355.60	330.60	7.70	OR70032700	NBR/BFT	PTA-622
P453300803	356.00	330.00	8.00	OR70032700	NBR/BFT	PTA-379
P453320801	357.00	332.00	8.10	OR69932957	NBR/BFT	PTA-830
P453350801	**360.00**	**335.50**	**8.10**	**OR69932957**	**NBR/BFT**	**PTA-196**
P453356401	360.00	335.50	8.10	OR69932957	FKM/BFT	PTA-467
P453360802	360.00	335.50	8.10	OR69932957	NBR/BFT	PTA-450
P453396401	360.00	339.00	8.00	OR70033700	FKM/BFT	PTA-494
P453397001	365.00	339.00	8.10	OR70033400	NBR/BFT	PTA-570
P453400801	365.00	340.00	8.10	OR69933592	NBR/BFT	PTA-470
P453440801	369.12	344.62	8.10	OR70034230	NBR/BFT	PTA-569
P453420801	370.00	342.70	9.50	OR84033950	NBR/BFT	PTA-589
P453450801	**370.00**	**345.50**	**8.10**	**OR69934227**	**NBR/BFT**	**PTA-275**
P453550802	380.00	355.50	8.10	OR69935000	NBR/PU	PTA-412
P453550801	**380.00**	**355.50**	**8.10**	**OR69935000**	**NBR/BFT**	**PTA-197**
P453556402	380.00	355.50	8.10	OR69935000	FKM/BFT	PTA-835
P453570801	382.00	357.50	8.10	OR70035600	NBR/BFT	PTA-728
P453600803	385.00	360.00	8.10	OR70035600	NBR/BFT	PTA-769
P453600801	385.00	360.50	8.10	OR70035600	NBR/BFT	PTA-598
P453650801	**390.00**	**365.50**	**8.10**	**OR69935600**	**NBR/BFT**	**PTA-276**
P453650801	390.00	365.50	8.10	OR69935600	NBR/BFT	PTA-409
P453656401	390.00	365.50	8.10	OR69935600	FKM/BFT	PTA-626
P453700801	395.00	370.50	8.10	OR70036700	NBR/BFT	PTA-370
P453727001	400.00	372.00	9.20	OR84036830	NBR/BFT	PTA-604
P453727002	400.00	372.00	9.50	OR84036830	NBR/BFT	PTA-398
P453756401	400.00	375.50	8.10	OR69937000	FKM/BFT	PTA-620
P453750801	**400.00**	**375.50**	**8.10**	**OR69937000**	**NBR/BFT**	**PTA-198**
P453760801	400.00	376.00	8.10	OR69937000	NBR/BFT	PTA-623
P453780801	402.50	378.00	8.10	OR69937400	NBR/BFT	PTA-432
P453860801	402.70	386.70	6.50	OR53338037	NBR/BFT	PTA-761
P453850801	410.00	385.50	8.10	OR69938037	NBR/BFT	PTA-277
P453850801	410.00	385.50	8.10	OR69938037	NBR/BFT	PTA-811
P453900801	415.00	390.50	8.10	OR70038700	NBR/BFT	PTA-465
P453940801	420.00	394.00	8.10	OR70039050	NBR/BFT	PTA-452
P453950801	**420.00**	**395.50**	**8.10**	**OR69939307**	**NBR/BFT**	**PTA-278**
P454010801	425.00	401.00	8.10	OR70039670	NBR/BFT	PTA-597
P454020802	430.00	402.00	8.10	OR70039670	NBR/BFT	PTA-702
P454050801	430.00	405.50	8.10	OR69940000	NBR/BFT	PTA-279
P454060801	430.70	406.20	8.10	OR70040000	NBR/BFT	PTA-705
P454150801	440.00	415.50	8.10	OR69940900	NBR/BFT	PTA-420
P454150801	440.00	415.50	8.10	OR69940900	NBR/BFT	PTA-280
P454200801	440.00	420.00	9.00	OR69941796	NBR/BFT	PTA-755
P454250801	**450.00**	**425.50**	**8.10**	**OR69941796**	**NBR/BFT**	**PTA-199**
P454256401	450.00	425.50	8.10	OR69941796	FKM/BFT	PTA-339
P454250804	450.00	425.50	8.10	OR69941796	NBR/BFT	PTA-807
P454250802	451.50	425.00	8.10	OR70041900	NBR/BFT	PTA-586
P454300801	455.00	430.50	8.10	OR70041900	NBR/BFT	PTA-624
P454356401	460.00	435.50	8.10	OR69943066	FKM/BFT	PTA-504
P454350801	460.00	435.50	8.10	OR69943066	NBR/BFT	PTA-281
P454450801	470.00	445.50	8.10	OR69944336	NBR/BFT	PTA-282

Bold sizes are readily available in stock.
Other materials are available on request.

P45

Double Acting Piston Composite Seal

MAX SPARE LIMITED
QUALITY. PRECISION. SPEED.

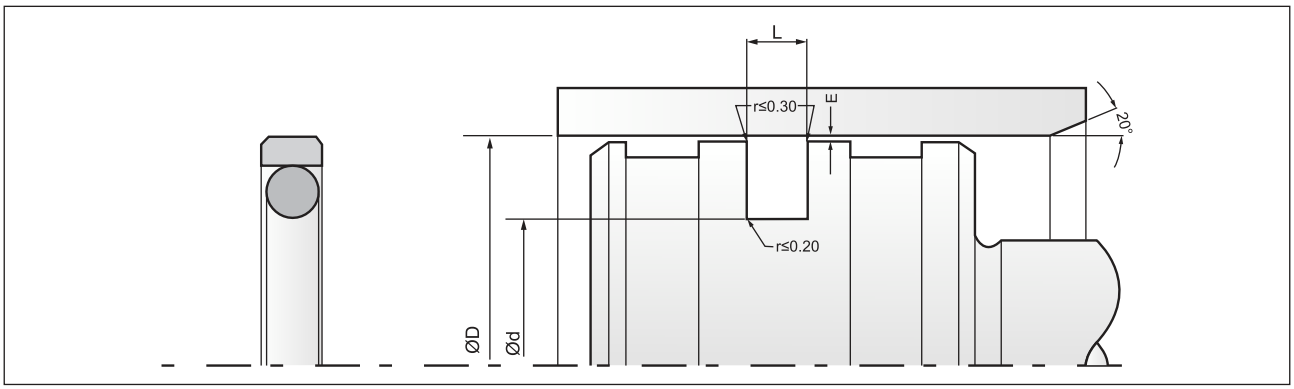

Part No.	D (H9)	d (h9)	L (+0.2)	O-Ring Part No.	Material	Mould No.
P454450803	470.00	445.50	8.10	OR69944336	NBR/BFT	PTA-767
P45450Z201	480.00	450.00	12.50	OR110044200	NBR/BFT	PTA-456
P454556402	480.00	455.00	8.10	OR70045000	FKM/BFT	PTA-584
P454550801	480.00	455.50	8.10	OR69945000	NBR/BFT	PTA-283
P454580801	483.00	458.50	8.10	OR70045200	NBR/BFT	PTA-653
P454650801	490.00	465.50	8.10	OR69946300	NBR/BFT	PTA-828
P454650801	490.00	465.50	8.10	OR69946300	NBR/BFT	PTA-284
P454670801	495.70	467.20	12.80	OR100043600	NBR/BFT	PTA-495
P454756401	500.00	475.50	8.10	OR69946876	FKM/BFT	PTA-797
P454750801	**500.00**	**475.50**	**8.10**	**OR69946876**	**NBR/BFT**	**PTA-200**
P454850801	**510.00**	**485.50**	**8.10**	**OR69948146**	**NBR/BFT**	**PTA-285**
P454950801	520.00	495.50	8.10	OR69949416	NBR/BFT	PTA-286
P455057001	530.00	505.50	8.10	OR69950000	NBR/BFT	PTA-287
P455150801	540.00	515.50	8.10	OR69950686	NBR/BFT	PTA-621
P455250801	**550.00**	**525.50**	**8.10**	**OR69951200**	**NBR/BFT**	**PTA-201**
P455310801	556.00	531.50	8.10	OR70052670	NBR/BFT	PTA-763
P455350801	560.00	535.50	8.10	OR69953226	NBR/BFT	PTA-299
P455430801	567.50	543.00	8.10	OR70053900	NBR/BFT	PTA-735
P455457001	570.00	545.50	8.10	OR69954350	NBR/BFT	PTA-300
P455550801	580.00	555.50	8.10	OR69954600	NBR/BFT	PTA-301
P455650801	590.00	565.50	8.10	OR69955766	NBR/BFT	PTA-302
P455740801	595.00	574.00	8.10	OR69956400	NBR/BFT	PTA-720
P455750801	**600.00**	**575.50**	**8.10**	**OR69956500**	**NBR/BFT**	**PTA-202**
P455850801	610.00	585.50	8.10	OR69958268	NBR/BFT	PTA-303
P455950801	620.00	595.50	8.10	OR69959400	NBR/BFT	PTA-304
P456000802	625.00	600.50	8.10	OR70059600	NBR/BFT	PTA-669
P456050801	630.00	605.50	8.10	OR69960000	NBR/BFT	PTA-305
P456150801	640.00	615.50	8.10	OR69961400	NBR/BFT	PTA-306
P456230801	648.00	623.50	8.10	OR69962150	NBR/BFT	PTA-644
P456250801	650.00	625.50	8.10	OR69962499	NBR/BFT	PTA-307
P456350801	660.00	635.50	8.10	OR69963348	NBR/BFT	PTA-308
P456407001	665.00	640.50	8.10	OR69963200	NBR/BFT	PTA-665

Part No.	D (H9)	d (h9)	L (+0.2)	O-Ring Part No.	Material	Mould No.
P456420801	670.00	642.00	9.50	OR84064000	NBR/BFT	PTA-309
P456520801	680.00	652.00	9.50	OR84064950	NBR/BFT	PTA-310
P456550801	680.00	655.50	8.10	OR69965350	NBR/BFT	PTA-643
P456620801	690.00	662.00	9.50	OR84065950	NBR/BFT	PTA-311
P456726401	700.00	672.00	9.50	OR84066950	FKM/BFT	PTA-312
P456720801	700.00	672.00	9.50	OR84066950	NBR/BFT	PTA-583
P456820801	710.00	682.00	9.50	OR84067950	NBR/BFT	PTA-313
P456920801	720.00	692.00	9.50	OR84068950	NBR/BFT	PTA-314
P457020801	730.00	702.00	9.50	OR84069950	NBR/BFT	PTA-315
P457120801	740.00	712.00	9.50	OR84070950	NBR/BFT	PTA-316
P457127101	740.20	712.00	9.50	OR84070950	FKM/BFT	PTA-684
P457220801	750.00	722.00	9.50	OR84071950	NBR/BFT	PTA-430
P457320801	760.00	732.00	9.50	OR84072950	NBR/BFT	PTA-318
P457420801	770.00	742.00	9.50	OR84073950	NBR/BFT	PTA-319
P457520801	780.00	752.00	9.50	OR84074950	NBR/BFT	PTA-320
P457620801	790.00	762.00	9.50	OR84075950	NBR/BFT	PTA-321
P457720801	800.00	772.00	9.50	OR84076450	NBR/BFT	PTA-385
P457820801	810.00	782.00	9.50	OR84077900	NBR/BFT	PTA-323
P457920801	820.00	792.00	9.50	OR84078900	NBR/BFT	PTA-324
P458120801	840.00	812.00	9.50	OR84081500	NBR/BFT	PTA-326
P458420801	870.00	842.00	9.50	OR84083700	NBR/BFT	PTA-329
P458520801	880.00	852.00	9.50	OR84084700	NBR/BFT	PTA-330
P458620801	890.00	862.00	9.50	OR84085800	NBR/BFT	PTA-331
P458720801	900.00	872.00	9.50	OR84086500	NBR/BFT	PTA-332
P458820801	910.00	882.00	9.50	OR84088000	NBR/BFT	PTA-333
P458920801	920.00	892.00	9.50	OR8408900	NBR/BFT	PTA-334
P459020801	930.00	902.00	9.50	OR84090000	NBR/BFT	PTA-335
P459120801	940.00	912.00	9.50	OR84091000	NBR/BFT	PTA-336
P459220801	950.00	922.00	9.50	OR84092000	NBR/BFT	PTA-337
P459370801	965.00	937.00	9.50	OR8408900	NBR/BFT	PTA-338
P459737001	1000.00	973.00	9.50	OR84096600	NBR/BFT	PTA-833

Bold sizes are readily available in stock.
Other materials are available on request.

P46

Double Acting Piston Composite Seal

DETAILS

P46 is a double-acting piston seal designed for heavy duty large size hydraulic cylinders. It comprises of a Bronze filled PTFE seal ring and one elastomeric profile ring as a pre-load element.

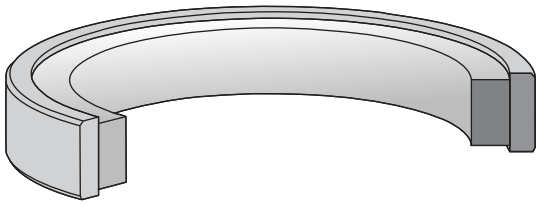

COMPATIBILITY

Mineral oils, bio oils, water soluble & water glycol fluids

MATERIAL

Sealing Ring: Bronze filled PTFE
Profile Ring: Nitrile Rubber 70/75 Shore A

APPLICATION

Application Presses, agricultural machinery, injection moulding machines, mills, marine hydraulics, industrial vehicles, cranes, handling equipment, control and regulation equipment.

OPERATING CONDITIONS

Temperature Range	:	-30°C to + 100°C (up to + 220°C on request)
Pressure	:	400 Bar
Speed	:	5.0 m/s

FEATURES

- Highly stable under high pressure.
- High torsional safety.
- High resistance to abrasion.
- Good thermal conductivity.
- Friction at minimum.
- High contact pressure due to the elastomer profile ring.
- Any size upto 1200mm available on request.

SURFACE ROUGHNESS

Static	:	1.6 µmRa
Dynamic	:	0.4 µmRa

INSTALLATION & ASSEMBLY

Refer to page no. 25 for installation & assembly of P46 piston seal.

PERMISSIBLE EXTRUSION GAP	E max (mm)
100 Bar	0.50
200 Bar	0.40
400 Bar	0.30

P46

Double Acting Piston Composite Seal

MAX SPARE LIMITED
QUALITY. PRECISION. SPEED.

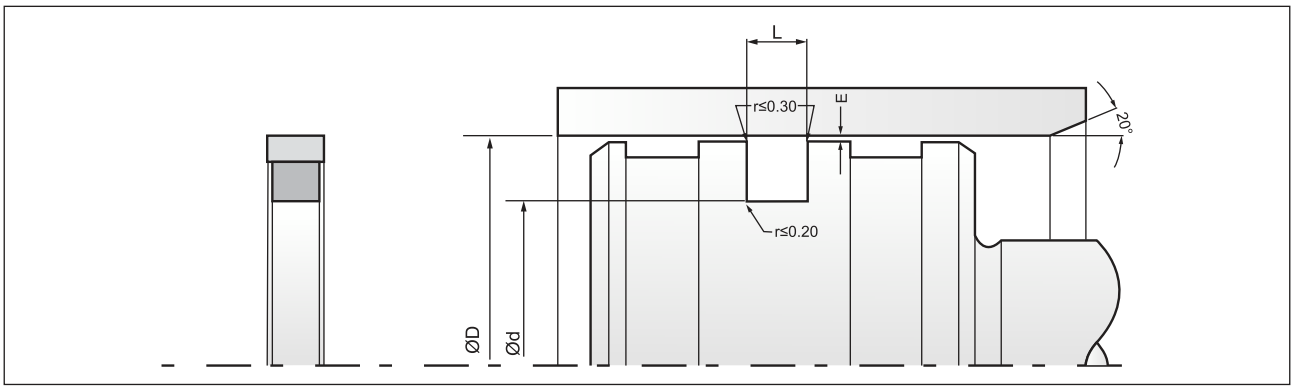

Part No.	D (H9)	d (h9)	L (+0.2)	Material	Mould No.
P46008K801	11.00	8.00	1.90	FKM	CS-1983
P46006E302	12.00	6.00	2.50	NYLON	PTC-269
P460080901	12.00	8.00	2.20	NBR	PTC-256
P46009E301	15.00	9.00	2.50	NYLON	PTC-268
P46012E301	22.00	12.00	6.00	BFT	PTC-213
P460166401	22.00	16.00	5.00	FKM/BFT	PTC-241
P46017D501	25.00	17.50	3.20	HNBR/BFT	FRA-973
P460170801	25.40	17.53	3.27	NBR	PTC-300
P46018E301	28.00	18.00	5.00	BFT	PTC-214
P460217002	28.50	21.50	1.85	BFT	PTC-231
P460230801	31.75	23.88	3.27	NBR	PTC-299
P46022E301	32.00	22.00	4.00	BFT	PTC-166
P46025E302	32.00	25.00	3.20	BFT	PTC-235
P46030E304	38.00	30.50	5.00	BFT	PTC-279
P460330801	38.00	33.50	3.60	NBR/BFT	PTC-291
P46031E303	38.10	31.35	3.17	BFT	PTC-233
P460306401	40.00	30.00	8.00	FKM/BFT	CS-1556
P460346901	40.00	34.00	3.00	PTFE	PTC-314
P46035E302	43.00	35.00	3.40	NYLON	PTC-267
P460368701	44.45	36.60	3.27	NBR	CS-1798
P460346001	45.00	34.10	4.20	FKM	PTC-284
P460356401	45.00	35.00	7.00	FKM/BFT	CS-1206
P460356401	45.00	35.00	7.00	FKM/BFT	PTC-114
P460357001	45.00	35.50	4.40	BFT	PTC-193
P460366001	45.00	36.00	4.60	BFT	PTC-118
P460406901	47.50	40.00	3.50	VMQ	PTC-313
P46037E303	50.00	37.00	6.50	BFT	PTC-246
P460376403	50.00	37.00	10.00	FKM/BFT	CS-1129
P460376403	50.00	37.00	10.00	FKM/BFT	PTC-112
P46038E301	50.00	38.50	4.30	BFT	PTC-189
P46039E302	50.00	39.00	4.20	CNT	PTC-134
P460397002	50.00	39.00	6.30	NBR/BFT	PTB-134
P460407001	50.00	40.00	4.30	BFT	PTC-139
P460400801	50.00	40.00	5.00	CAT	PTC-292
P460406401	50.00	40.00	6.00	FKM/BFT	FRA-3020
P460418701	50.80	41.40	7.14	NBR	CS-1405
P460437002	50.80	43.00	3.10	CNT	PTC-126
P46040E301	52.00	40.00	4.20	NYLON	PTC-270
P460520901	54.50	52.00	3.60	NBR/NYLON	FRA-1843
P460397001	55.00	39.00	4.20	FKM/BFT	PTC-244
P460617001	55.50	60.50	2.50	NBR/BFT	FRA-3778
P460467001	56.00	46.00	4.60	BFT	PTC-192
P460498701	57.15	49.30	3.27	NBR	CS-1797
P460387001	58.00	38.00	10.00	BFT	PTC-110
P460470901	60.00	47.00	6.30	NBR/BFT	FRA-1433
P460527002	60.00	52.10	4.20	BFT	PTC-200
P46048E302	63.00	48.00	7.30	BFT	PTC-257
P460480901	63.00	48.00	7.50	NBR/BFT	CS-749
P460480901	63.00	48.00	7.50	NBR/BFT	PTC-169
P46048E301	63.00	48.00	10.40	BFT	PTC-216
P460497001	63.00	49.00	6.00	FKM/BFT	PTC-261
P460507001	63.00	50.00	6.00	FKM	CS-3029

Part No.	D (H9)	d (h9)	L (+0.2)	Material	Mould No.
P46050E302	63.00	50.00	6.30	PTFE	PTC-117
P46050E307	63.00	50.00	6.50	BFT	PTC-247
P460507002	63.00	50.00	10.00	FKM	CS-3017
P46050E303	63.00	50.00	10.40	BFT	PTC-153
P460510901	63.00	51.00	4.00	NBR/BFT	PTC-149
P460510901	63.00	51.00	4.00	NBR/BFT	CS-927
P46052E302	63.00	52.00	4.20	CNT	PTC-136
P460527003	63.00	52.00	6.00	FKM	CS-3027
P460536401	63.00	53.00	6.50	FKM	CS-3123
P460548701	63.50	54.10	7.14	PU	CS-1739
P460550801	63.50	55.58	3.17	NBR/BFT	FRA-2922
P46055E303	63.50	55.80	3.20	BFT	PTC-178
P460587001	64.00	58.00	3.40	NBR/BFT	PTC-312
P460617001	64.50	61.00	3.10	BFT	PTC-152
P460607003	69.85	60.32	7.14	FKM/BFT	CS-1283
P460550901	70.00	55.00	6.30	NBR/BFT	PTC-105
P46055E301	70.00	55.00	7.50	BFT	PTC-209
P460580801	70.00	58.00	6.00	NBR/BFT	PTC-273
P460590801	70.00	59.00	3.80	NBR/BFT	PTC-277
P460607005	70.00	60.50	7.00	BFT	PTC-237
P460630804	70.00	63.00	3.70	NBR	PTC-236
P460637001	71.00	63.00	7.00	FKM/BFT	PTC-262
P460646401	73.00	64.20	7.00	FKM/BFT	CS-2900
P46058E301	75.00	58.00	7.30	BFT	PTC-188
P460607004	75.00	60.00	7.30	BFT	PTC-140
P460600904	75.00	60.00	7.50	NBR/BFT	CS-1379
P460670901	75.00	67.00	7.20	NBR/BFT	CS-1456
P460607005	76.20	60.32	6.35	BFT	PTC-161
P460610901	76.20	61.91	4.76	NBR/CAT	FRA-1220
P46061E301	76.20	61.92	7.93	BFT	PTC-146
P46061E302	76.20	61.97	7.21	BFT	PTC-184
P460627001	76.20	62.00	7.30	BFT	PTC-113
P460620901	76.20	62.53	7.18	HYTREL	CS-1086
P460627002	76.20	62.53	7.18	NBR	PTC-318
P460630803	76.20	63.50	7.14	NBR/PTFE	CS-1023
P460668701	76.20	66.80	7.14	NBR	CS-1404
P460597001	80.00	59.00	8.10	FKM/BFT	PTC-286
P46059E303	80.00	59.00	10.40	BFT	PTC-230
P460596401	80.00	59.00	14.40	FKM/BFT	PTC-229
P460607001	80.00	60.00	10.00	NBR/BFT	CS-836
P46064E306	80.00	64.50	6.30	BFT	PTC-115
P46065E305	80.00	65.00	6.30	BFT	PTC-141
P460657001	80.00	65.00	10.70	NBR/BFT	FRA-1439
P460657001	80.00	65.00	10.70	BFT	PTC-239
P460657002	80.00	65.00	12.00	FKM/BFT	CS-1639
P46070E302	80.00	70.00	4.80	BFT	PTC-238
P460706401	80.00	70.00	6.00	FKM/BFT	FRA-3019
P460720901	80.00	72.00	4.20	NBR/BFT	FRA-1384
P460720901	80.00	72.00	4.20	NBR/BFT	PTC-130
P46064E307	80.50	64.50	6.30	BFT	PTC-142
P460746401	81.00	74.20	5.90	FKM/BFT	CS-2863
P46073E302	82.00	73.00	3.70	BFT	PTC-174

Bold sizes are readily available in stock.
Other materials are available on request.

P46

Double Acting Piston Composite Seal

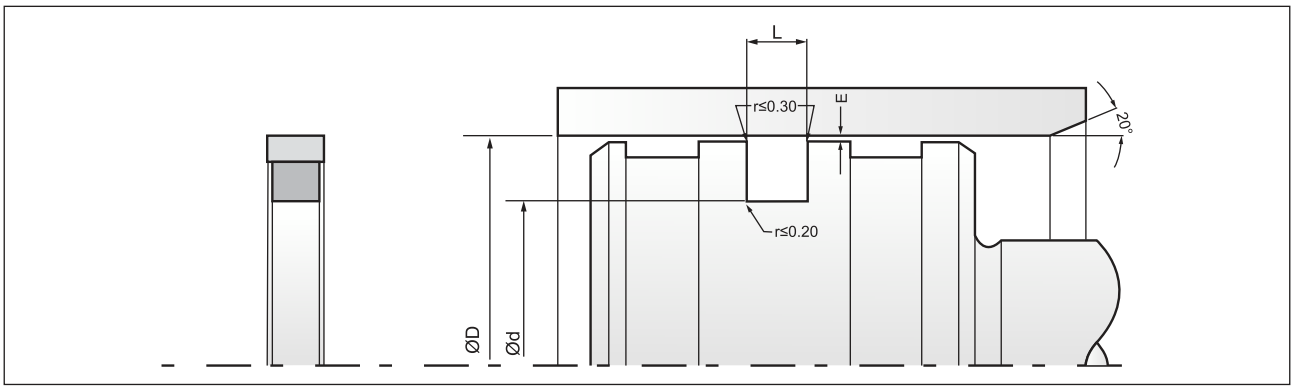

Part No.	D (H9)	d (h9)	L (+0.2)	Material	Mould No.
P46068E304	82.40	68.70	7.10	NBR/BFT	PTC-201
P46068E303	82.55	68.32	7.21	BFT	PTC-185
P46068E305	82.55	68.70	7.10	BFT	PTC-227
P46073E303	83.00	73.30	7.00	BFT	PTC-220
P46069E303	85.00	69.50	8.10	BFT	PTC-107
P460751001	88.00	75.00	7.00	FKM/BFT	PTC-263
P460740810	88.90	74.62	7.14	NBR/BFT	PTC-198
P460798701	88.90	79.50	7.14	PU	CS-1740
P460780802	89.00	78.00	6.00	NBR/BFT	PTC-271
P46069E304	90.00	69.00	8.10	BFT	PTC-252
P460706402	90.00	70.00	10.00	FKM/BFT	CS-1958
P460706402	90.00	70.00	10.00	BFT	PTC-219
P460750901	90.00	75.00	6.30	NBR/BFT	PTC-103
P460750901	90.00	75.00	6.30	NBR/BFT	CS-1643
P460767001	90.00	76.00	7.00	NBR/BFT	CS-1219
P460760801	90.00	76.00	7.00	NBR/BFT	CS-1493
P460800801	90.00	80.00	6.00	NBR/BFT	PTC-278
P460806401	90.00	80.00	7.20	FKM/BFT	FRA-961
P460820901	90.00	82.00	7.20	NBR/BFT	CS-1457
P460791101	92.00	79.00	6.50	NBR/BFT	CS-1576
P460791101	92.00	79.00	6.50	NBR/BFT	PTC-156
P460796401	92.07	79.10	7.11	FKM/BFT	CS-1287
P460796401	92.07	79.10	7.11	FKM/BFT	PTC-109
P46079E306	95.00	79.50	6.30	CNT	PTC-133
P460810901	95.00	81.00	5.50	NBR	CS-857
P460877001	95.60	86.00	6.00	FKM/BFT	CS-1697
P460797002	100.00	79.00	14.00	FKM	CS-3031
P46079E307	100.00	79.00	14.50	BFT	PTC-226
P460797004	100.00	79.00	16.40	FKM	CS-3001
P46079E304	100.00	79.00	16.40	BFT	PTC-288
P460800901	100.00	80.00	8.10	NBR/BFT	CS-1642
P460800901	100.00	80.00	8.10	NBR/BFT	PTC-101
P460806402	100.00	80.00	8.50	FKM/BFT	FRA-3012
P46084E305	100.00	84.50	6.30	BFT	PTC-280
P460860901	100.00	86.60	5.50	NBR	CS-858
P460877001	100.00	87.00	6.90	FKM/BFT	PTC-144
P46089K101	100.00	89.60	5.10	NBR	PTC-245
P460907001	100.00	90.00	9.50	NBR/BFT	FRA-1598
P460860801	101.60	86.00	7.13	NBR/BFT	CS-2803
P46087L301	101.60	87.37	7.21	BFT	PTC-157
P46087L301	101.60	87.37	7.21	AFLAS	CS-1735
P460870901	101.60	87.93	7.18	HYTREL	CS-1100
P460928701	101.60	92.20	7.14	NBR	CS-1403
P46086E302	102.00	86.20	6.30	BFT	PTC-255
P460850801	105.00	85.00	10.00	NBR	PTC-274
P460850901	105.00	85.00	10.00	NBR/BFT	FRB-552
P460910901	105.00	91.60	5.50	NBR	CS-1057
P460930901	105.00	93.00	6.30	NBR/BFT	FRB-512
P460930901	105.00	93.00	6.30	NBR/BFT	PTC-131
P46093E303	105.40	93.10	7.50	BFT	PTC-183
P460957002	107.95	95.25	6.98	NBR/BFT	FRB-414
P461036401	108.50	103.80	6.80	FKM/BFT	FRB-620

Part No.	D (H9)	d (h9)	L (+0.2)	Material	Mould No.
P460890901	110.00	89.00	8.10	NBR/BFT	CS-1644
P460890901	110.00	89.00	8.10	NBR/BFT	PTC-102
P460900901	110.00	90.00	10.00	NBR/PU	CS-1627
P460960901	110.00	96.00	6.50	NBR/BFT	FRB-517
P460960902	110.00	96.60	5.50	NBR	CS-859
P46090E301	110.87	90.00	10.40	PTFE	PTC-127
P460967003	112.00	96.00	7.30	NBR/BFT	CS-1339
P461040801	114.30	104.78	3.20	NBR/BFT	CS-1286
P461040801	114.30	104.78	3.20	NBR/BFT	PTC-104
P461050801	114.30	105.56	3.17	NBR/BFT	CS-1597
P461050801	114.30	105.56	3.17	NBR/BFT	PTC-199
P461010901	115.00	101.60	5.50	NBR	CS-860
P460980801	119.00	98.00	8.00	NBR/BFT	PTC-272
P461047001	120.00	104.00	7.30	NBR/BFT	CS-2030
P461047001	120.00	104.00	7.30	BFT	PTC-234
P461010801	120.65	101.25	9.65	NBR/GLT	CS-1518
P46105E303	124.50	105.00	5.00	BFT	PTC-191
P461007001	125.00	100.00	15.60	CNT	PTC-125
P461047003	125.00	104.00	14.00	FKM	CS-3034
P46104E306	125.00	104.00	14.50	BFT	PTC-225
P46104E303	125.00	104.00	16.40	BFT	PTC-154
P461046501	125.00	104.00	16.40	FKM/BFT	CS-1845
P461050901	125.00	105.00	10.00	NBR	PTC-132
P461050901	125.00	105.00	10.00	NBR/PU	CS-1540
P461056401	125.00	105.00	13.00	FKM/BFT	PTC-258
P461086401	125.00	108.00	4.70	FKM/BFT	PTC-249
P461097001	125.00	109.00	7.00	BFT	PTC-168
P461097003	125.00	109.50	6.30	FKM/BFT	PTC-322
P461090903	125.00	109.50	6.30	NBR	CS-2936
P46109E301	125.00	109.50	6.30	CNT	PTC-135
P461096501	125.00	109.50	8.10	FKM/BFT	CS-1496
P461097005	125.00	109.50	10.40	FKM	CS-3000
P461110901	125.00	111.60	5.50	NBR	CS-861
P461126401	125.00	112.00	9.00	FKM/BFT	FRB-935
P461126402	125.00	112.00	12.00	FKM/BFT	PTC-111
P461126402	125.00	112.00	12.00	FKM/BFT	FRB-946
P461067003	127.00	106.36	9.52	BFT	PTC-170
P46107E301	127.00	107.05	9.80	BFT	PTC-150
P461127001	127.00	112.70	7.14	BFT	PTC-164
P461127002	127.00	112.71	7.00	FKM/BFT	PTC-264
P461120801	127.00	112.78	7.21	NBR	PTC-298
P46113E305	127.00	113.00	7.10	BFT	PTC-251
P46114E302	127.00	114.00	8.70	BFT	PTC-223
P461141002	127.00	114.30	7.00	NBR/BFT	CS-1089
P461140801	127.00	114.30	7.00	NBR/BFT	CS-1217
P461147005	127.00	114.30	7.00	BFT	PTC-160
P461147004	127.00	114.30	7.00	FKM/BFT	PTC-266
P461177002	127.00	117.00	3.00	FKM/BFT	CS-1777
P461177002	127.00	117.00	3.00	FKM/BFT	PTC-163
P461177001	127.00	117.47	6.98	BFT	PTC-138
P461177001	127.00	117.47	7.54	FKM/BFT	FRB-453
P461177003	127.00	117.47	7.54	BFT	PTC-296

Bold sizes are readily available in stock.
Other materials are available on request.

P46

Double Acting Piston Composite Seal

MAX SPARE LIMITED
QUALITY. PRECISION. SPEED.

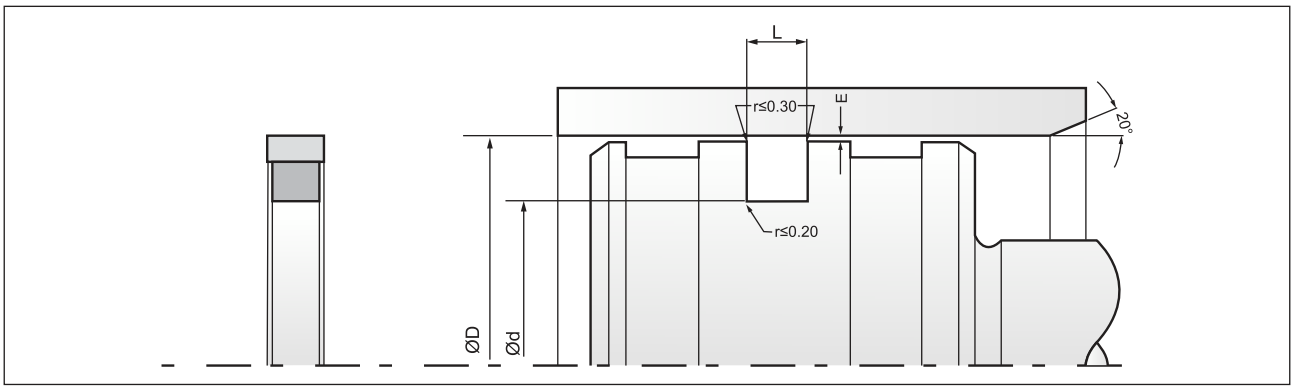

Part No.	D (H9)	d (h9)	L (+0.2)	Material	Mould No.
P461178701	127.00	117.60	7.14	NBR/PU	CS-1498
P461140901	128.00	114.00	7.40	NBR/BFT	CS-1458
P461086402	128.20	108.80	5.60	FKM/BFT	SUF-969
P461107001	130.00	110.00	9.50	FKM/BFT	CS-975
P461137003	130.00	113.00	9.00	NBR	CS-2862
P461133701	130.00	113.00	9.00	BFT	PTC-116
P461130801	130.00	113.00	9.00	NBR/BFT	FRB-479
P461130901	130.00	113.00	9.00	NBR/BFT	PTC-158
P461130901	130.00	113.00	9.00	NBR/BFT	CS-1737
P461147001	130.00	114.00	7.30	NBR/BFT	CS-1340
P461197002	133.15	119.25	8.00	FKM/BFT	FRB-627
P461210901	135.00	121.60	5.50	NBR	CS-1058
P46125E302	139.00	125.00	8.10	BFT	PTC-240
P461200801	139.70	120.35	9.62	NBR	PTC-297
P46119E302	139.77	119.83	10.84	BFT	PTC-248
P46119E302	139.77	119.83	10.84	BFT	PTC-254
P461200901	140.00	120.00	10.00	NBR	CS-2804
P461310901	145.00	131.60	5.50	NBR	CS-863
P46132E302	152.40	132.00	9.60	BFT	PTC-186
P461337701	152.40	133.36	9.30	GLT	PTC-145
P461330801	152.40	133.36	9.52	NBR/BFT	PTC-195
P461330801	152.40	133.36	9.52	NBR/BFT	FRB-921
P461330810	152.40	133.36	9.52	NBR/BFT	PTC-317
P46139E303	152.40	139.00	4.20	BFT	PTC-290
P461397002	152.40	139.70	6.30	NBR	PTC-119
P46137E301	152.55	137.50	3.95	BFT	PTC-162
P46133E302	153.00	133.40	9.00	BFT	PTC-221
P461410901	155.00	141.60	5.50	NBR	CS-864
P46134E301	156.60	134.80	7.20	NBR	PTC-181
P461390801	158.75	139.70	9.52	NBR	CS-2871
P461357003	160.00	135.00	12.00	BFT	PTC-187
P461357002	160.00	135.00	12.00	FKM/BFT	CS-976
P461356401	160.00	135.00	12.50	FKM/BFT	PTC-316
P461397004	160.00	139.00	8.10	CNT+BFT	PTC-137
P46139E302	160.00	139.00	8.30	BFT	PTC-143
P46140E301	160.00	140.00	8.00	NBR	PTC-124
P461400901	160.00	140.00	10.00	NBR	FRB-1047
P461407701	160.00	140.00	10.40	NBR	FRB-928
P461510901	165.00	151.60	5.50	NBR	CS-865
P461517002	165.00	151.90	4.10	BFT	PTC-293
P461460801	165.10	146.05	9.52	NBR/FABRIC	PTC-289
P46158E303	172.00	158.30	9.50	BFT	PTC-211
P461580801	177.80	158.45	9.62	NBR	PTC-302
P461580802	177.80	158.75	9.52	NBR	CS-2870
P461624301	177.80	162.28	8.67	VMQ	PTC-283
P461570901	178.00	157.00	9.60	NBR/BFT	CS-1459
P461587001	178.00	158.00	9.50	BFT	PTC-232
P461517001	180.00	151.20	9.80	BFT	PTC-155
P461577001	180.00	157.00	11.00	BFT	PTC-260
P461597002	180.00	159.00	8.10	FKM/BFT	PTC-294
P461600901	180.00	160.00	10.00	NBR/BFT	PTC-176
P461600901	180.00	160.00	10.00	NBR/BFT	CS-1799

Part No.	D (H9)	d (h9)	L (+0.2)	Material	Mould No.
P461687001	180.00	168.00	8.10	BFT	PTC-204
P461707001	180.00	170.00	8.10	BFT	PTC-215
P461707002	190.50	170.00	8.00	BFT	PTC-217
P461810901	195.00	181.60	5.50	NBR	CS-869
P461756401	200.00	175.00	12.00	FKM	CS-2985
P461796701	200.00	179.00	8.06	FKM/BFT	PTC-285
P461791101	200.00	179.00	8.06	NBR/BFT	CS-2890
P461806401	200.00	180.00	12.00	FKM/BFT	FRB-923
P461806402	202.00	180.00	15.00	FKM/BFT	FRC-278
P461927001	202.00	192.00	8.00	BFT	PTC-287
P461830801	203.20	183.85	9.62	NBR	PTC-305
P461847002	203.20	184.15	9.60	BFT	PTC-159
P46183E302	203.50	183.50	9.50	BFT	PTC-196
P46177E302	204.00	177.00	8.10	BFT	PTC-222
P46185E302	208.00	185.60	9.50	BFT	PTC-190
P461850901	210.00	185.00	12.50	NBR	CS-1401
P46193E301	210.00	193.00	7.70	BFT	PTC-212
P46195E302	220.00	195.00	12.40	BFT	PTC-182
P461957001	220.00	195.00	12.50	FKM/BFT	PTC-147
P461957001	220.00	195.00	12.50	FKM/BFT	CS-1705
P461966501	224.50	196.00	15.30	FKM/BFT	FRC-147
P46203E301	225.00	203.00	10.80	BFT	PTC-206
P462060801	228.60	206.30	9.62	NBR	PTC-303
P462150901	240.00	215.00	12.50	NBR	CS-1435
P46229E306	245.00	229.00	8.10	BFT	PTC-205
P462276401	247.80	227.90	9.60	FKM/BFT	CS-1545
P46225E301	250.00	225.00	8.10	NBR	PTC-121
P462257001	250.00	225.00	12.00	FKM	CS-3028
P46229E305	250.00	229.00	8.10	BFT	PTC-165
P462290901	250.00	229.00	9.40	NBR/BFT	CS-1554
P462417001	251.00	241.00	7.80	NBR/BFT	PTC-208
P462310801	254.00	231.70	9.62	NBR+PU	PTC-304
P462330801	254.00	233.36	9.52	NBR/BFT	FRC-279
P462477001	256.20	247.90	8.00	BFT	PTC-207
P46230E301	260.00	230.00	15.30	CAT	PTC-282
P462440801	266.70	244.40	9.62	NBR	PTC-301
P462456401	267.80	245.60	9.20	FKM/BFT	PTC-250
P462636401	276.00	263.00	8.00	FKM/BFT	PTC-242
P462506501	280.00	250.00	15.00	FKM/GLT	FRC-185
P462670901	280.00	267.00	8.00	NBR/BFT	PTC-108
P462656401	285.80	265.90	9.60	FKM/BFT	CS-1544
P462700903	300.00	270.00	15.00	NBR	CS-1402
P462701002	300.00	270.00	15.00	NBR/BFT	PTC-276
P462796401	304.80	279.40	11.20	FKM/BFT	PTC-295
P46282E301	304.80	282.40	9.50	BFT	PTC-180
P462820801	304.80	282.50	9.62	NBR	PTC-306
P46283E301	304.80	283.40	9.50	BFT	PTC-311
P462840801	304.80	284.16	9.52	NBR/BFT	FRC-277
P46293E301	304.80	293.30	5.6/12.30	PTFE	PTC-259
P46280E301	310.00	280.00	15.00	BFT	PTC-173
P46290E302	320.00	290.00	10.80	NBR	PTC-129
P46290E303	320.00	290.00	15.00	NBR	PTC-128

Bold sizes are readily available in stock.
Other materials are available on request.

P46

Double Acting Piston Composite Seal

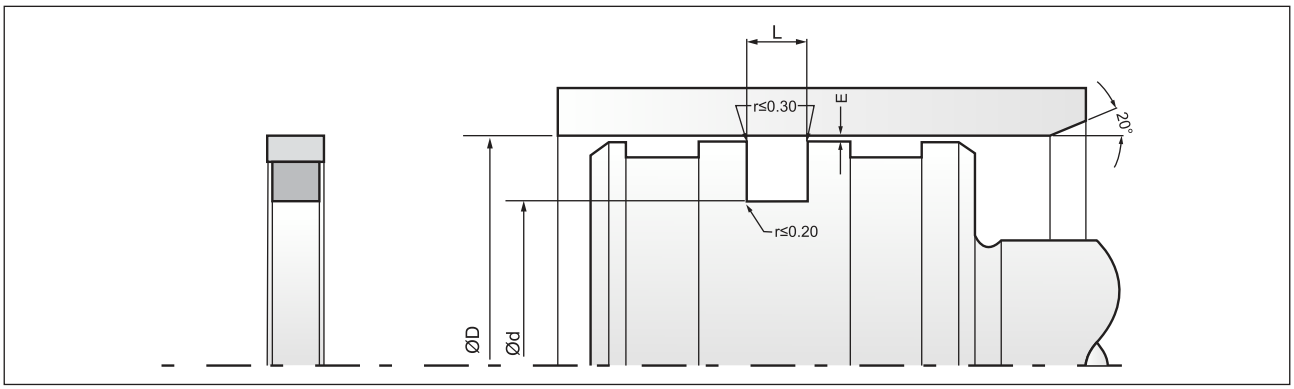

Part No.	D (H9)	d (h9)	L (+0.2)	Material	Mould No.
P46290E301	320.00	290.00	15.00	GLT	PTC-224
P462966401	320.00	296.00	12.00	FKM/BFT	CS-2931
P462956501	320.20	295.80	12.00	FKM/BFT	PTC-320
P46300E301	330.00	300.00	14.50	BFT	PTC-203
P463070801	330.20	307.90	9.62	NBR	PTC-308
P463330801	355.60	333.30	9.62	NBR	PTC-307
P46334E301	355.60	334.60	8.10	BFT	PTC-281
P463300901	360.00	330.00	15.00	NBR/PU	FRD-172
P463427001	368.00	342.00	8.00	BFT	PTC-275
P46340E301	370.00	340.00	14.00	BFT	PTC-228
P46342E301	371.47	342.91	11.11	BFT	PTC-171
P463706401	400.00	370.00	15.00	FKM/BFT	CS-1641
P463706501	400.00	370.00	15.00	FKM/BFT	PTC-148
P463700901	400.00	370.00	15.00	NBR	SUM-807
P463686401	406.40	368.30	12.30	FKM/BFT	CS-968
P463826401	406.40	382.00	9.50	FKM/BFT	CS-2895
P46385E301	406.40	385.00	9.50	BFT	PTC-310
P46410E301	440.00	410.00	14.50	BFT	PTC-210
P464180901	444.25	418.85	12.70	NBR/BFT	FRE-159
P464207101	450.00	420.50	8.10	BFT	PTC-243
P464307002	450.00	430.00	9.30	BFT	PTC-167
P464310801	450.00	431.00	9.30	NBR/BFT	PTC-323
P464327001	450.00	432.00	10.00	NBR/BFT	PTC-179
P464327001	450.00	432.00	10.00	NBR/BFT	CS-1473

Part No.	D (H9)	d (h9)	L (+0.2)	Material	Mould No.
P464227001	457.00	422.00	17.50	NBR	PTC-122
P464700901	500.00	470.00	15.00	NBR	PTC-321
P46486E301	508.00	486.60	9.50	BFT	PTC-309
P46535E301	570.00	535.00	17.00	BFT	PTC-175
P465490801	571.50	549.20	10.05	NBR	CS-2735
P46545E301	580.00	545.00	17.00	NBR	PTC-120
P466057001	640.00	605.00	17.50	BFT	PTC-106
P46668E301	708.00	668.00	20.00	PU	PTC-253
P466530801	711.59	653.55	19.00	NBR/BFT	CS-2729
P466530801	711.59	653.55	19.00	NBR/BFT	PTC-319
P46695E301	720.00	695.00	11.00	NBR	PTC-123
P467267001	750.00	726.00	9.50	BFT	PTC-172
P46745E301	780.00	745.23	12.30	BFT	PTC-151
P467457001	780.41	745.10	12.70	NBR/BFT	FRE-155
P46795E301	820.00	795.00	12.00	BFT	PTC-197
P467950902	820.00	795.00	12.00	NBR/BFT	FRE-188
P46810E301	850.00	810.00	20.00	BFT	PTC-177
P46849E301	875.28	849.06	14.50	PTFE	PTC-202
P468707001	900.00	870.00	24.50	NBR/BFT	CS-838
P468707001	900.00	870.00	24.50	NBR/BFT	PTC-218
P468757001	900.00	875.00	12.00	BFT	PTC-265
P46920E301	940.00	920.00	32.00	BFT	PTC-194
P469991001	1050.00	1010.00	19.00	NBR/BFT	FRE-165

Bold sizes are readily available in stock.
Other materials are available on request.

P93

Double Acting Piston Composite Seal

DETAILS

P93 is a double-acting seal comprises of a Bronze filled PTFE seal ring, a quad ring and an O-Ring as energizing element. The seal ring energized with quad ring perform the dynamic sealing function, while the O-Ring performs a static sealing function.

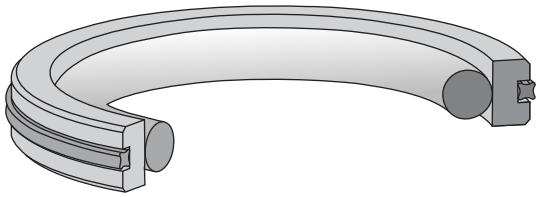

COMPATIBILITY

Mineral oils, bio oils, water soluble & water glycol fluids

MATERIAL

Sealing Ring: Bronze filled PTFE
O Ring: Nitrile Rubber 70/75 Shore A
Quad Ring: Nitrile Rubber 70/75 Shore A

APPLICATION

Application Presses, agricultural machinery, injection moulding machines, mills, marine hydraulics, industrial vehicles, cranes, handling equipment, control and regulation equipment.

OPERATING CONDITIONS

Temperature Range : -30°C to + 100°C
(up to + 220°C on request)
Pressure : 400 Bar
Speed : 2.0 m/s

FEATURES

- Excellent in seperation of two different fluids.
- Well proven design.
- Self-lubricating seal ring.
- High surface speed.
- Friction at minimum & no issue with stick-slip.
- Compact design.
- Any size upto 1200mm available on request.

SURFACE ROUGHNESS

Static : 1.6 µmRa
Dynamic : 0.4 µmRa

INSTALLATION & ASSEMBLY

The same installation procedure for piston seal P45 may be used for P93 also. Please refer to page no. 25 for the same. However, the quad ring should not be fitted until the P93 have been calibrated.

PERMISSIBLE EXTRUSION GAP E max (mm)

Bore Diameter D (H9)	Groove Diameter d (h9)	Groove Width L (+0.20)	Permissible Extrusion Gap E Max (in mm)			O Ring Cross Sec. (c/s)	Quad Ring Cross Sec. (c/s)
			Pressure 100 Bar	Pressure 200 Bar	Pressure 400 Bar		
15 - 39.90	D - 11.0	4.20	0.25	0.15	0.10	3.53	1.78
40 - 79.90	D - 15.5	6.30	0.30	0.20	0.15	5.33	1.78
80 - 132.90	D - 21.0	8.10	0.30	0.20	0.15	6.99	2.62
133 - 252.90	D - 24.5	8.10	0.30	0.20	0.15	6.99	2.62
253 - 462.90	D - 28.0	9.50	0.45	0.30	0.25	8.40	3.53
463 - 700	D - 35.0	11.50	0.55	0.40	0.35	10.00	5.33

P93

Double Acting Piston Composite Seal

MAX SPARE LIMITED
QUALITY. PRECISION. SPEED.

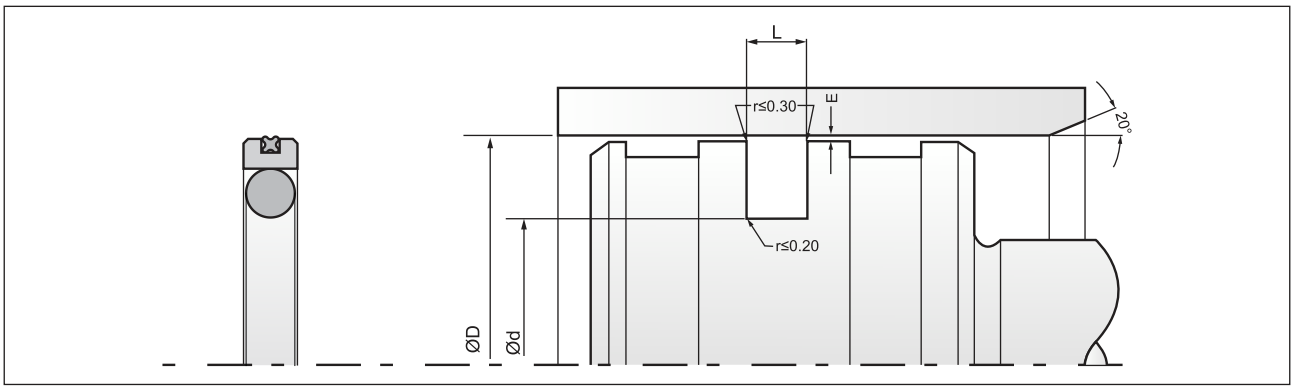

Part No.	D (H9)	d (h9)	L (+0.2)	O-Ring Part No.	Quad Ring Size	Material
P930050801	16.00	5.00	4.20	4.34 x 3.53	12.42 x 1.78	NBR/BFT
P930070801	18.00	7.00	4.20	6.40 x 3.50	14.00 x 1.78	NBR/BFT
P930090801	20.00	9.00	4.20	8.00 x 3.50	15.60 x 1.78	NBR/BFT
P930110801	22.00	11.00	4.20	10.69 x 3.53	17.17 x 1.78	NBR/BFT
P930140801	25.00	14.00	4.20	13.87 x 3.53	20.35 x 1.78	NBR/BFT
P930170801	28.00	17.00	4.20	15.47 x 3.53	23.52 x 1.78	NBR/BFT
P930190801	30.00	19.00	4.20	18.64 x 3.53	25.12 x 1.78	NBR/BFT
P930210801	32.00	21.00	4.20	20.22 x 3.53	26.70 x 1.78	NBR/BFT
P930240801	35.00	24.00	4.20	23.39 x 3.53	29.87 x 1.78	NBR/BFT
P930290801	40.00	29.00	4.20	28.17 x 3.53	34.65 x 1.78	NBR/BFT
P930310801	42.00	31.00	4.20	29.74 x 3.53	37.82 x 1.78	NBR/BFT
P930340801	45.00	34.00	4.20	32.92 x 3.53	37.85 x 1.78	NBR/BFT
P930370801	48.00	37.00	4.20	36.09 x 3.53	41.00 x 1.78	NBR/BFT
P930340802	50.00	34.50	6.30	32.69 x 3.53	44.17 x 1.78	NBR/BFT
P930390801	50.00	39.00	4.20	37.69 x 3.53	44.17 x 1.78	NBR/BFT
P930410801	52.00	41.00	4.20	40.87 x 3.53	47.35 x 1.78	NBR/BFT
P930440801	55.00	44.00	4.20	44.04 x 3.53	50.52 x 1.78	NBR/BFT
P930490801	60.00	49.00	4.20	47.22 x 3.53	53.67 x 1.78	NBR/BFT
P930470801	63.00	47.50	6.30	46.99 x 5.33	56.87 x 1.78	NBR/BFT
P930520301	63.00	52.00	4.20	50.39 x 3.53	56.87 x 1.78	NBR/BFT
P930526901	63.00	52.00	4.20	50.39 x 3.53	56.87 x 1.78	FKM/BFT
P930540801	65.00	54.00	4.20	53.57 x 3.53	60.05 x 1.78	NBR/BFT
P930540802	70.00	54.50	6.30	53.34 x 5.33	63.22 x 1.78	NBR/BFT
P930590802	70.00	59.00	4.20	56.74 x 3.53	63.22 x 1.78	NBR/BFT
P930640802	75.00	64.00	4.20	63.09 x 3.53	69.57 x 1.78	NBR/BFT
P930590801	80.00	59.00	8.10	57.30 x 6.99	72.69 x 2.62	NBR/BFT
P930640803	80.00	64.50	6.30	62.87 x 5.33	72.75 x 1.78	NBR/BFT
P930640801	80.00	64.50	6.30	57.30 x 5.33	75.92 x 1.78	NBR/BFT
P930640802	85.00	64.00	8.10	63.00 x 7.00	75.87 x 2.62	NBR/BFT
P930690801	85.00	69.50	6.30	69.22 x 5.33	75.92 x 1.78	NBR/BFT
P930690802	90.00	69.00	8.10	68.00 x 7.00	82.22 x 2.62	NBR/BFT
P930740801	90.00	74.50	6.30	72.39 x 5.33	82.27 x 1.78	NBR/BFT
P930740802	95.00	74.00	8.10	73.00 x 7.00	82.22 x 2.62	NBR/BFT
P930790801	95.00	79.50	6.30	78.74 x 5.33	88.62 x 1.78	NBR/BFT
P930790802	100.00	79.00	8.10	78.00 x 7.00	88.57 x 2.62	NBR/BFT
P930796401	100.00	79.00	8.10	78.00 x 7.00	88.57 x 2.62	NBR/BFT
P930840801	100.00	84.50	6.30	81.92 x 5.33	88.62 x 1.78	NBR/BFT
P930846401	100.00	84.50	6.30	81.92 x 5.33	88.62 x 1.78	FKM/BFT
P930840802	105.00	84.00	8.10	83.00 x 7.00	94.62 x 2.62	NBR/BFT
P930890802	105.00	89.50	6.30	88.27 x 5.33	94.97 x 1.78	NBR/BFT
P930890801	110.00	89.00	8.10	88.00 x 7.00	101.27 x 2.62	NBR/BFT
P930940802	110.00	94.50	6.30	91.44 x 5.33	101.32 x 1.78	NBR/BFT
P930940801	115.00	94.00	8.10	93.00 x 7.00	107.62 x 2.62	NBR/BFT
P930990802	115.00	99.50	6.30	97.79 x 5.33	101.67 x 1.78	NBR/BFT
P930990801	120.00	99.00	8.10	98.00 x 7.00	107.62 x 2.62	NBR/BFT
P931047001	120.00	104.50	6.30	100.97 x 5.33	114.02 x 1.78	NBR/BFT

Part No.	D (H9)	d (h9)	L (+0.2)	O-Ring Part No.	Quad Ring Size	Material
P931040801	125.00	104.00	8.10	103.00 x 7.00	113.97 x 2.62	NBR/BFT
P931097001	125.00	109.50	6.30	107.32 x 5.33	114.02 x 1.78	NBR/BFT
P93109801	130.00	109.00	8.10	108.00 x 7.00	120.32 x 2.62	NBR/BFT
P931140802	130.00	114.50	6.30	113.67 x 5.33	120.37 x 1.78	NBR/BFT
P931140801	135.00	114.00	8.10	113.67 x 6.99	126.67 x 2.62	NBR/BFT
P931190801	140.00	119.00	8.10	116.84 x 6.99	126.67 x 2.62	NBR/BFT
P931290801	150.00	129.00	8.10	126.37 x 7.00	139.37 x 2.62	NBR/BFT
P931390802	160.00	139.00	8.10	135.89 x 6.99	152.07 x 2.62	NBR/BFT
P931490801	170.00	149.00	8.10	145.42 x 6.99	158.42 x 2.62	NBR/BFT
P931506901	180.00	150.00	10.50	148.00 x 9.50	172.00 x 3.53	FKM/BFT
P931590803	180.00	159.00	8.10	158.12 x 6.99	171.11 x 2.62	NBR/BFT
P931596901	180.00	159.00	8.10	158.12 x 6.99	171.11 x 2.62	FKM/BFT
P931690801	190.00	169.00	8.10	164.47 x 6.99	177.47 x 2.62	NBR/BFT
P931797001	200.00	179.00	8.10	177.17 x 7.00	190.17 x 2.62	NBR/BFT
P931890801	210.00	189.00	8.10	183.52 x 6.99	196.52 x 2.62	NBR/BFT
P931990801	220.00	199.00	8.10	196.22 x 6.99	202.87 x 2.62	NBR/BFT
P932000801	224.00	200.00	8.10	196.22 x 6.99	202.87 x 2.62	NBR/BFT
P932090801	230.00	209.00	8.10	202.57 x 6.99	215.57 x 2.62	NBR/BFT
P932190801	240.00	219.00	8.10	215.27 x 6.99	221.92 x 2.62	NBR/BFT
P932297001	250.00	229.00	8.10	227.97 x 7.00	234.62 x 2.62	NBR/BFT
P932520801	280.00	252.00	9.50	250.00 x 8.40	266.29 x 3.53	NBR/BFT
P932720801	300.00	272.00	9.50	269.50 x 8.40	278.99 x 3.53	NBR/BFT
P932790801	300.00	279.00	8.10	269.50 x 8.40	278.99 x 3.53	NBR/BFT
P932820801	310.00	282.00	9.50	280.00 x 8.40	291.69 x 3.53	NBR/BFT
P932920801	320.00	292.00	9.50	290.00 x 8.40	304.39 x 3.53	NBR/BFT
P933220801	350.00	322.00	9.50	319.50 x 8.40	340.00 x 3.53	NBR/BFT
P933290801	350.00	329.00	8.10	327.00 x 7.00	341.00 x 2.62	NBR/BFT
P933250801	355.00	325.00	9.00	325.00 x 8.00	348.00 x 3.53	NBR/BFT
P933520801	380.00	352.00	9.50	350.00 x 8.40	370.00 x 3.53	NBR/BFT
P933590801	380.00	359.00	8.10	356.00 x 7.00	375.00 x 2.62	NBR/BFT
P933720801	400.00	372.00	9.50	370.00 x 7.00	380.59 x 3.53	NBR/BFT
P933920801	420.00	392.00	9.50	390.00 x 7.00		NBR/BFT
P934020801	430.00	402.00	9.50	400.00 x 8.40	420.00 x 3.53	NBR/BFT
P934220801	450.00	422.00	9.50	420.00 x 8.40	440.00 x 3.53	NBR/BFT
P934450801	480.00	445.00	11.50	444.00 x 8.40		NBR/BFT
P934520801	480.00	452.00	9.50	449.10 x 8.40	470.00 x 3.53	NBR/BFT
P934590801	480.00	459.00	8.10	456.00 x 7.00	475.00 x 2.62	NBR/BFT
P934650801	500.00	465.00	11.50	464.00 x 8.40	456.06 x 5.33	NBR/BFT
P934657001	500.70	465.50	11.60	464.00 x 10.00	456.06 x 5.33	NBR/BFT
P935020801	530.00	502.00	9.50	500.00 x 8.40	520.00 x 3.53	NBR/BFT
P935090801	530.00	509.00	8.10	506.00 x 7.00	525.00 x 2.62	NBR/BFT
P935520801	580.00	552.00	9.50	550.00 x 8.40	570.00 x 3.53	NBR/BFT
P935590801	580.00	559.00	8.10	557.61 x 6.99	575.00 x 2.62	NBR/BFT
P935650801	600.00	565.00	11.50	564.00 x 8.40	557.58 x 5.33	NBR/BFT
P936650801	700.00	665.00	11.50	664.00 x 8.40	658.88 x 5.33	NBR/BFT

Bold sizes are readily available in stock.
Other materials are available on request.

P58

Double Acting Piston Composite Seal

DETAILS

P58 is a double acting piston seal comprises of a polyurethane sealing ring and a rectangular section elastomer energizer ring. Polyurethane sealing element is robust, wear resistant, with a high modulus of elasticity which enables easier fitting. The energizer seal with rectangular cross section, prevents twisting in housing.

COMPATIBILITY

Mineral oils, bio oils, water soluble & water glycol fluids.

MATERIAL

Sealing Ring : Polyurethane 98 Shore A
Energizer Ring : Nitrile Rubber 75/80 Shore A

APPLICATION

Earth moving equipment, agricultural machinery, injection moulding machines, industrial vehicles, cranes, loading platforms.

OPERATING CONDITIONS

Temperature Range : -30°C to + 100°C
Pressure : 400 Bar
Speed : 0.5 m/s

FEATURES

- Contact pressure ring with flat energizer, prevents twisting in the housing.
- Good static and dynamic tightness.
- Low friction.
- Smooth movement at low speed.
- Low axial housing heights.

SURFACE ROUGHNESS

Static : 1.6 µmRa
Dynamic : 0.4 µmRa

INSTALLATION & ASSEMBLY

Carefull fitting is a prerequisite for the correct function of the seal. The installation groove must be carefully deburred and cleaned and the cylinder bore must have an edge chamfer. The P58 seal can be snapped in to closed grooves.

PERMISSIBLE EXTRUSION GAP

Groove Height 'L'	Permissible Extrusion Gap E Max (in mm)			
	Pressure 150 Bar	Pressure 250 Bar	Pressure 300 Bar	Pressure 400 Bar
3.20	0.30	0.20	-	-
4.20	0.40	0.30	0.20	-
6.30	0.50	0.40	0.30	0.25
8.10	0.60	0.50	0.40	0.35
10.50	0.65	0.55	0.45	0.40

P58

Double Acting Piston Composite Seal

MAX SPARE LIMITED
QUALITY. PRECISION. SPEED.

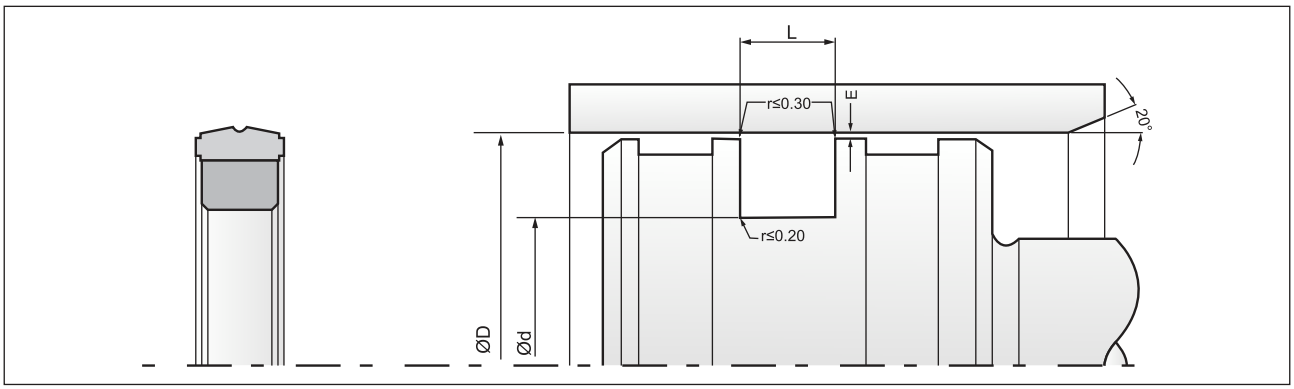

Part No.	D (H9)	d (h9)	L (+0.2)	Material	Mould No.
P580070901	12.00	7.10	2.20	NBR	CS-1843
P580108701	18.00	10.50	3.20	PU	PPA-1090
P580148701	22.00	14.50	3.20	PU	PUA-393
P58017L501	25.00	17.50	3.20	PU	CS-1445
P58017Y701	25.00	17.50	3.20	PU	CS-2320
P58017L502	25.80	17.37	3.07	PU	CS-3010
P58020Y701	28.00	20.50	3.20	PU	CS-2319
P58024Y701	32.00	24.50	3.20	PU	CS-2280
P580268701	34.00	26.50	3.20	PU	CS-1062
P58027L401	35.00	27.50	3.20	PU	PUB-731
P580278701	35.00	27.50	3.20	PU	PUB-732
P58027L402	35.00	27.50	4.20	PU	CS-1326
P58031L501	38.10	31.75	4.00	PU	CS-1285
P58031Y701	38.10	31.75	7.11	PU	CS-2396
P580318702	38.10	31.95	4.75	PU	CS-1706
P58024Y702	40.00	24.50	6.30	NBR	CS-1024
P58027R301	40.00	27.00	6.30	PU	CS-1098
P58029Y701	40.00	29.00	4.20	PU	CS-2281
P58029Y702	40.00	29.00	4.20	NBR	CS-2578
P580298701	40.00	29.00	4.20	PU	PUB-733
P580318701	42.00	31.00	4.20	PU	PUB-887
P58038Y701	44.45	38.10	4.70	PU	CS-2397
P58039Y706	44.45	39.04	2.24	PU	CS-3136
P58037Y701	47.63	37.67	2.77	PU	CS-3112
P58034Y703	50.00	34.00	6.30	PU	CS-2713
P58034L501	50.00	34.50	6.00	PU	CS-654
P58034Y701	50.00	34.50	6.30	PU	CS-2284
P58034Y702	50.00	34.50	6.30	NBR	CS-2576
P58037L501	50.00	37.00	6.00	PU	CS-690
P58038L502	50.00	38.00	5.84	PU	CS-2908
P580380901	50.00	38.00	6.30	NBR	CS-817
P58039L401	50.00	39.00	4.20	PU	PUB-795
P58039L501	50.00	39.00	4.20	PU	PUB-606
P58039L402	50.00	39.00	4.20	PU	CS-1327
P58039Y703	50.00	39.00	4.20	PU	CS-2282
P58039Y704	50.00	39.00	4.20	NBR	CS-2575
P58039L503	50.00	39.00	4.20	PU	CS-2005
P580431001	50.00	43.40	4.20	NBR	CS-1490
P58035L501	50.80	35.30	6.00	PU	PUC-1104
P58038L501	50.80	38.10	6.35	PU	CS-1563
P58040Y701	50.80	40.03	4.76	PU	CS-2398
P58041Y703	50.80	41.28	4.88	PU	CS-3094
P58041Y701	50.80	41.28	7.11	PU	CS-2399
P58041Y702	50.80	41.28	10.41	PU	CS-2400
P58044Y704	53.98	44.02	2.92	PU	CS-3111
P58039L502	55.00	39.50	6.30	PU	CS-2001
P58039Y705	55.00	39.50	6.30	NBR	CS-2571
P58044Y701	55.00	44.00	4.20	PU	CS-2283
P580475902	57.15	47.25	3.20	PU	CS-2722
P58047Y706	57.15	47.63	4.88	PU	CS-3095
P58047Y702	57.15	47.63	7.11	PU	CS-2401
P58059Y703	59.85	59.08	4.76	PU	CS-2421

Part No.	D (H9)	d (h9)	L (+0.2)	Material	Mould No.
P58044Y702	60.00	44.50	6.30	PU	CS-2288
P58044L504	60.00	44.50	6.30	PU	CS-962
P58044Y703	60.00	44.50	6.30	NBR	CS-2577
P58049L402	60.00	49.00	4.20	PU	CS-1328
P58049Y701	60.00	49.00	4.20	PU	CS-2321
P58049Y703	60.00	49.00	4.20	NBR	CS-2572
P58049L401	60.00	49.00	4.20	PU	PPA-993
P58055L501	60.00	55.00	4.00	PU	PUC-693
P58050Y702	60.33	50.80	7.11	PU	CS-2402
P58055L503	60.90	55.70	3.90	PU	CS-1792
P58047Y705	63.00	47.50	6.30	PU	CS-2546
P58047Y701	63.00	47.50	6.30	PU	CS-2313
P580508701	63.00	50.00	6.30	PU	CS-1133
P58050Y703	63.00	50.00	6.30	NBR	CS-2573
P58052Y701	63.00	52.00	4.20	PU	CS-2322
P58052Y703	63.00	52.00	4.20	NBR	CS-2582
P58052L501	63.00	52.00	4.20	PU	CS-1708
P58055L502	63.00	55.00	7.00	PU	CS-1407
P58052Y702	63.50	52.73	4.76	PU	CS-2403
P58053Y703	63.50	53.98	4.88	PU	CS-3096
P58053L501	63.50	53.98	6.60	PU	CS-1519
P58053Y701	63.50	53.98	7.11	PU	CS-2404
P58053Y702	63.50	53.98	10.41	PU	CS-2405
P58056Y701	63.50	56.46	3.05	PU	CS-3135
P58049Y705	65.00	49.50	6.30	NBR	CS-2586
P58049Y702	65.00	49.50	6.30	PU	CS-2286
P58050Y701	65.00	50.00	7.30	PU	CS-2295
P58054Y701	65.00	54.00	4.20	PU	CS-2323
P58055Y703	69.85	55.63	6.96	PU	CS-3087
P58059Y709	69.85	59.64	3.81	PU	CS-3110
P58060Y704	69.85	60.33	4.88	PU	CS-3097
P58060Y702	69.85	60.33	7.11	PU	CS-2422
P58054Y704	70.00	54.50	6.30	NBR	CS-2574
P58054Y702	70.00	54.50	6.30	PU	CS-2287
P580540901	70.00	54.50	6.30	PU	CS-2094
P580540902	70.00	54.50	6.30	PU	CS-475
P580550901	70.00	55.00	7.30	NBR	CS-801
P580550901	70.00	55.00	7.30	NBR	PUC-413
P58055Y701	70.00	55.00	7.30	PU	CS-2296
P58055Y702	70.00	55.00	7.30	NBR	CS-2580
P580570901	70.00	57.00	6.30	NBR	CS-744
P58059Y701	70.00	59.00	4.20	PU	CS-2324
P58059Y708	70.00	59.00	4.20	NBR	CS-2592
P58059L501	75.00	59.50	6.30	PU	CS-961
P58059Y702	75.00	59.50	6.30	PU	CS-2300
P58059Y706	75.00	59.50	6.30	NBR	CS-2581
P58060Y701	75.00	60.00	7.30	PU	CS-2297
P580620903	75.00	62.00	6.30	NBR	CS-793
P58060Y703	76.20	60.33	6.35	PU	CS-2424
P58061Y701	76.20	61.98	6.96	PU	CS-3088
P58062Y701	76.20	62.48	4.88	PU	CS-3124
P58065Y702	76.20	65.43	4.76	PU	CS-2423

Bold sizes are readily available in stock.
Other materials are available on request.

P58

Double Acting Piston Composite Seal

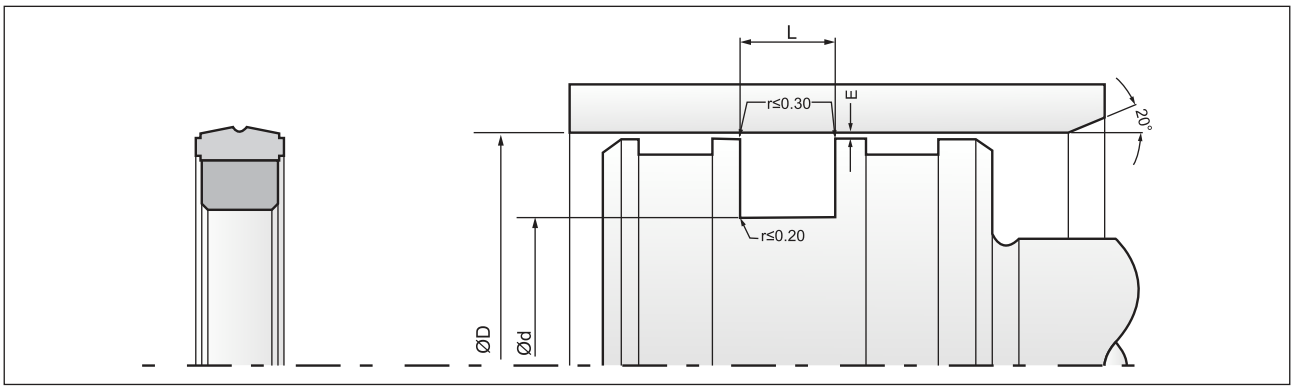

Part No.	D (H9)	d (h9)	L (+0.2)	Material	Mould No.
P58066Y706	76.20	66.12	3.81	NBR	CS-3098
P58066Y701	76.20	66.68	7.11	PU	CS-2428
P58066Y702	76.20	66.68	10.41	PU	CS-2427
P58066Y705	76.20	66.80	7.13	PU	CS-2712
P580598701	80.00	59.00	10.00	PU	CS-1132
P58059Y705	80.00	59.00	10.50	PU	CS-2599
P580646401	80.00	64.50	6.30	FKM	CS-1790
P58064L501	80.00	64.50	6.30	NBR	CS-2202
P58064Y701	80.00	64.50	6.30	PU	CS-2299
P580640901	80.00	64.50	6.30	PU	CS-474
P58064Y703	80.00	64.50	6.30	NBR	CS-2579
P580656001	80.00	65.00	6.30	NBR	CS-1979
P58065Y701	80.00	65.00	7.30	PU	CS-2279
P58068L501	80.00	68.00	7.00	PU	CS-1652
P58068Y701	80.00	68.00	7.30	PU	CS-2600
P58066Y703	82.55	66.90	6.35	PU	CS-2426
P58068Y702	82.55	68.33	6.96	PU	CS-3089
P58068Y703	82.55	68.83	4.88	PU	CS-3125
P58072Y701	82.55	72.47	3.81	PU	CS-3099
P58073Y702	82.55	73.03	7.11	PU	CS-2425
P58069Y702	85.00	69.50	6.30	NBR	CS-2595
P58069Y701	85.00	69.50	6.30	PU	CS-2298
P58073Y703	88.90	73.25	6.35	PU	CS-2430
P58074Y703	88.90	74.68	6.96	PU	CS-3090
P58075Y702	88.90	75.18	4.88	PU	CS-3126
P58078Y701	88.90	78.92	3.81	PU	CS-3100
P58079Y707	88.90	79.37	7.13	PU	CS-2927
P58079Y703	88.90	79.38	7.11	PU	CS-2429
P58079Y704	88.90	79.38	10.41	PU	CS-2406
P580740903	90.00	74.50	6.30	NBR	CS-473
P58074Y701	90.00	74.50	6.30	PU	CS-2285
P58074Y702	90.00	74.50	6.30	NBR	CS-2591
P58075Y701	90.00	75.00	7.30	PU	CS-2306
P58079Y701	95.00	79.50	6.30	PU	CS-2293
P58080Y701	95.00	80.00	7.30	PU	CS-2305
P58081Y701	95.25	81.53	4.88	PU	CS-3127
P58085Y704	95.25	85.17	3.81	PU	CS-3101
P58085Y702	95.25	85.73	7.11	PU	CS-2407
P58079Y708	100.00	79.00	8.10	PU	CS-2945
P58079L501	100.00	79.00	8.10	NBR	CS-2204
P58079Y706	100.00	79.00	8.10	NBR	CS-2590
P58079Y702	100.00	79.00	8.10	PU	CS-2330
P580848701	100.00	84.50	6.00	PU	CS-898
P58084L502	100.00	84.50	6.30	PU	CS-1368
P58084Y702	100.00	84.50	6.30	NBR	CS-2589
P58084Y701	100.00	84.50	6.30	PU	CS-2307
P580851001	100.00	85.00	6.30	NBR	CS-1812
P58085Y701	100.00	85.00	7.30	PU	CS-2325
P58084Y705	101.60	84.71	6.35	PU	CS-3132
P58085Y703	101.60	85.95	6.35	PU	CS-2408
P58087Y701	101.60	87.38	6.96	PU	CS-3091
P58092Y701	101.60	92.08	7.11	PU	CS-2409

Part No.	D (H9)	d (h9)	L (+0.2)	Material	Mould No.
P58092Y702	101.60	92.08	10.41	PU	CS-2410
P58087Y702	104.78	87.88	6.35	PU	CS-3131
P58089Y703	105.00	89.50	6.30	PU	CS-2598
P58095Y701	105.00	90.00	7.30	PU	CS-2309
P58091Y701	107.95	91.06	6.35	PU	CS-3130
P58092Y703	107.95	92.30	6.35	PU	CS-2411
P58098Y701	107.95	98.43	7.11	PU	CS-2412
P580897001	110.00	89.00	8.10	FKM	CS-2935
P58089Y704	110.00	89.00	8.10	PU	CS-2944
P58089Y701	110.00	89.00	8.10	PU	CS-2312
P58089Y702	110.00	89.00	8.10	NBR	CS-2585
P58089L501	110.00	89.00	8.10	PU	CS-795
P58094Y702	110.00	94.00	7.30	PU	CS-2304
P58094Y705	110.00	94.50	6.30	NBR	CS-2596
P58094Y701	110.00	94.50	6.30	PU	CS-2294
P58097Y701	114.30	97.41	6.35	PU	CS-3128
P58098Y702	114.30	98.65	6.35	PU	CS-2418
P58100Y701	114.30	100.08	6.96	PU	CS-3092
P58104Y703	114.30	104.78	7.11	PU	CS-2419
P58094Y703	115.00	94.00	8.10	PU	CS-2311
P58094Y706	115.00	94.00	8.10	NBR	CS-2594
P58099Y701	115.00	99.00	7.30	PU	CS-2308
P58099Y705	115.00	99.50	6.30	PU	CS-3103
P58099Y702	120.00	99.00	8.10	PU	CS-2303
P58099L503	120.00	99.00	8.10	PU	CS-963
P58099Y703	120.00	99.00	8.10	NBR	CS-2588
P58099L502	120.00	99.00	10.50	PU	CS-1069
P58099Y704	120.00	99.00	10.50	PU	CS-2601
P58099L505	120.00	99.00	10.50	PU	CS-2461
P58104Y701	120.00	104.00	7.30	PU	CS-2301
P58104Y706	120.00	104.50	6.30	PU	CS-3104
P58103Y701	120.65	103.76	6.35	PU	CS-3129
P58104Y705	125.00	104.00	8.10	NBR	CS-2593
P58104Y702	125.00	104.00	8.10	PU	CS-2289
P58104L501	125.00	104.00	10.50	PU	CS-2854
P58109Y701	125.00	109.00	7.30	PU	CS-2310
P58109Y702	125.00	109.50	6.30	PU	CS-2597
P58109L502	125.00	109.50	6.30	PU	CS-2085
P58109Y703	125.00	109.50	6.30	PU	CS-3105
P58111Y701	127.00	111.35	6.35	PU	CS-2420
P58112Y701	127.00	112.78	6.96	PU	CS-3093
P58114Y702	127.00	114.30	13.67	PU	CS-2417
P581178701	127.00	117.47	6.73	PU	CS-2689
P58117Y701	127.00	117.48	7.11	PU	CS-2416
P58109L501	130.00	109.00	8.10	PU	CS-1444
P58130Y701	130.00	109.00	8.10	PU	CS-2291
P58114Y701	130.00	114.00	7.30	PU	CS-2290
P58114Y704	130.00	114.50	6.30	PU	CS-3106
P58123Y701	133.35	123.27	3.81	PU	CS-3102
P58118Y701	139.70	118.62	8.18	PU	CS-2415
P58127Y701	139.70	127.00	9.27	PU	CS-2414
P58119Y706	140.00	119.00	8.10	PU	CS-1364

Bold sizes are readily available in stock.
Other materials are available on request.

P58

Double Acting Piston Composite Seal

MAX SPARE LIMITED
QUALITY. PRECISION. SPEED.

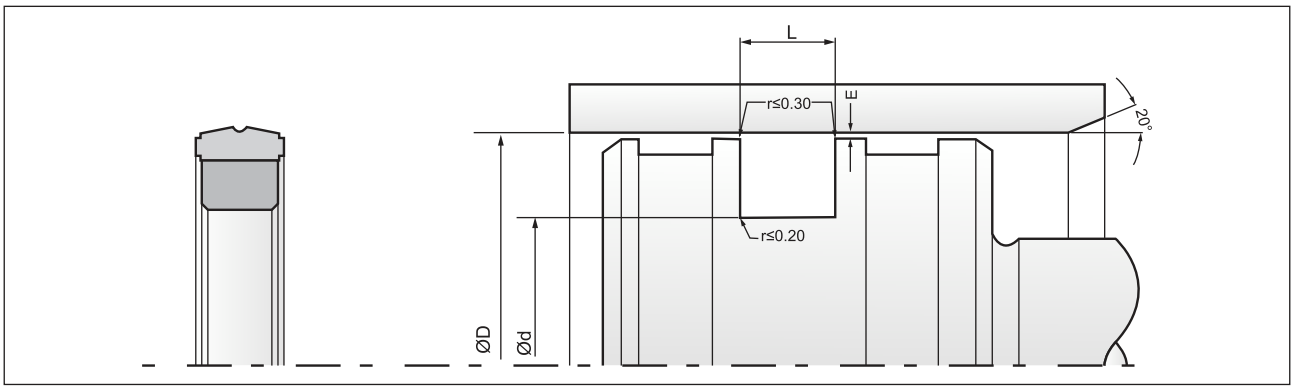

Part No.	D (H9)	d (h9)	L (+0.2)	Material	Mould No.
P58119Y701	140.00	119.00	8.10	PU	CS-2292
P58119Y702	140.00	119.00	8.10	NBR	CS-2587
P58119L501	140.00	119.00	10.00	PU	CS-725
P58119L504	140.00	119.00	10.50	PU	CS-2459
P58119Y705	140.00	119.00	10.50	NBR	CS-2602
P580124Y701	140.00	124.00	7.30	PU	CS-2302
P58124Y702	140.00	124.50	6.30	PU	CS-3107
P58129Y701	150.00	129.00	8.10	PU	CS-2329
P58129Y702	150.00	129.00	10.50	NBR	CS-2583
P58129L501	150.00	129.00	10.50	PU	CS-2460
P58129R301	150.00	129.00	10.50	PU	CS-1097
P58134Y701	150.00	134.50	6.30	PU	CS-3108
P58131Y701	152.40	131.32	8.18	PU	CS-2431
P58136Y701	152.40	136.75	6.35	PU	CS-2413
P58139Y701	152.40	139.70	9.27	PU	CS-2436

Part No.	D (H9)	d (h9)	L (+0.2)	Material	Mould No.
P58139L501	152.40	139.70	13.08	NBR	CS-1795
P58139Y702	152.40	139.70	13.67	PU	CS-2435
P58139Y703	160.00	139.00	8.10	PU	CS-2328
P58139Y704	160.00	139.00	8.10	NBR	CS-2584
P58139L502	160.00	139.00	8.10	PU	CS-2083
P58144Y702	160.00	144.50	6.30	PU	CS-3109
P58144Y701	165.10	144.02	8.18	PU	CS-2434
P58152Y701	165.10	152.40	9.27	PU	CS-2433
P58156Y701	177.80	156.72	8.18	PU	CS-2432
P58164Y701	177.80	164.64	3.63	PU	CS-3134
P58159Y701	180.00	159.00	8.10	PU	CS-2327
P581596003	180.00	159.00	8.10	NBR	CS-1638
P581790801	200.00	179.00	8.10	NBR	CS-1131
P58179Y701	200.00	179.00	8.10	PU	CS-2326
P582750901	300.00	275.00	12.00	NBR	CS-822

Bold sizes are readily available in stock.
Other materials are available on request.

P52

Double Acting Piston Compact Seal

DETAILS

P52 is a robust compact double acting piston seal assembly designed specifically for one-piece pistons. It uses a nitrile sealing element which has proven itself in service to be extremely wear resistant and capable of working most effectively in a wide variety of medium duty applications. This seal is also suitable for split piston applications with endless 'L' shaped bearing rings.

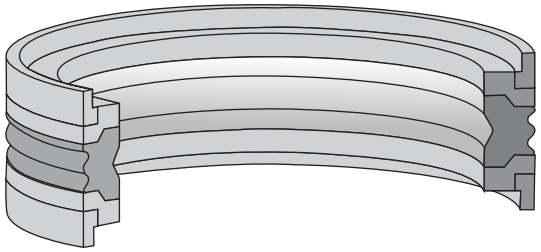

COMPATIBILITY

Mineral oils, water soluble & water glycol fluids.

MATERIAL

Sealing Ring : Nitrile Rubber 75/80 Shore A
Back-up rings : Polyurethane
Bearing rings : POM / Nylon

APPLICATION

- Light to medium duty cylinders.
- Static load holding (boom lifting to hold hydraulic platforms).
- Compact cylinders, Machine Tools.
- Agricultural equipments.

OPERATING CONDITIONS

Temperature Range : -30°C to + 100°C
Pressure : 400 Bar
Speed : 0.5 m/s

FEATURES

- Well proven design.
- Long service life.
- Short overall length of piston.
- Excellent load holding capability.
- Any size upto 500mm available on request.

SURFACE ROUGHNESS

Static : 1.6 µmRa
Dynamic : 0.4 µmRa

P52

Double Acting Piston Compact Seal

MAX SPARE LIMITED
QUALITY. PRECISION. SPEED.

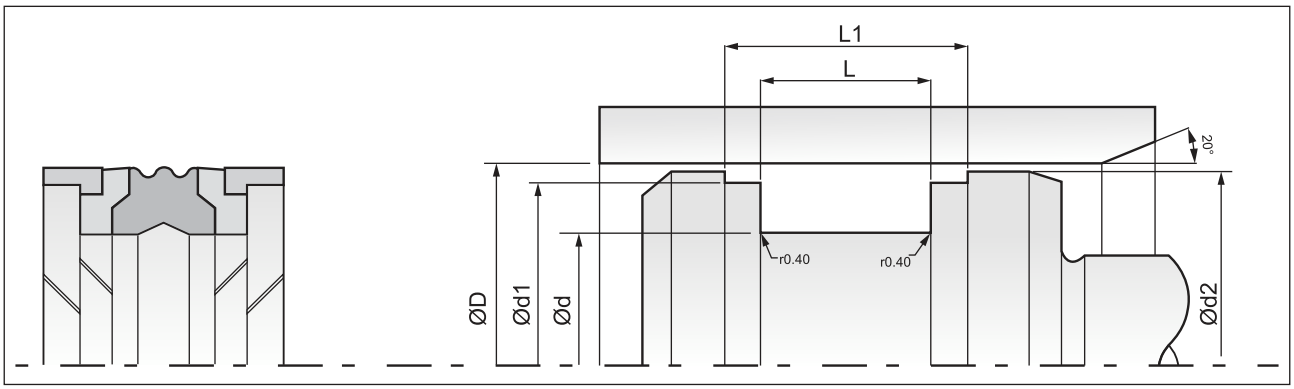

Part No.	D (H9)	d (h9)	d1 (h9)	L (+0.2)	L1 (+0.2)	d2 (h11)	Matl.	Mould No.
P520110901	**20.00**	**11.00**	**17.00**	**13.50**	**17.70**	**19.00**	**NBR**	**CS-134**
P520150901	**25.00**	**15.00**	**21.00**	**12**	**20.00**	**23.00**	**NBR**	**CS-135**
P520150904	25.00	15.00	21	12.50	20.5	23.00	NBR	CS-2792
P520150902	**25.00**	**15.00**	**21.45**	**16.40**	**29.1**	**23.50**	**NBR**	**CS-341**
P520166501	25.00	16.00	22	13.50	17.7	24	FKM	CS-1772
P520170904	25.00	17.00	21	10.00	18	23	NBR	CS-2209
P520170906	25.00	17.00	21	13.50	19.9	23	NBR	CS-2800
P520190901	28.00	19.00	25	13.50	17.7	27	NBR	CS-2793
P520170905	30.00	17.00	26.5	15.40	28.20	28.50	NBR	CS-572
P520170901	**30.00**	**17.00**	**26.5**	**15.40**	**28.2**	**28.5**	**NBR**	**CS-901**
P520210901	**30.00**	**21.00**	**27**	**13.50**	**17.7**	**29**	**NBR**	**CS-133**
P520210901	30.00	21.00	27	13.50	17.7	29	NBR	CS-133
P520210901	30.00	21.00	27	13.50	17.7	29	NBR	CS-133
P520210902	30.00	21.00	27	13.50	17.7	29	NBR	CS-133
P520220904	30.00	22.00	27	13.50	19.9	29	NBR	CS-2795
P520220903	32.00	22.00	29	12.50	20.5	31	NBR	CS-904
P520220902	32.00	22.00	28	15.50	20.7	31	NBR	CS-832
P520220901	**32.00**	**22.00**	**28.5**	**16.40**	**29.1**	**30.5**	**NBR**	**CS-148**
P520240901	**32.00**	**24.00**	**29**	**10.00**	**18**	**31**	**NBR**	**CS-174**
P520240911	32.00	24.00	28	15.50	21.7	31	NBR	CS-2801
P520240907	32.00	24.00	28.20	15.50	21.9	31	NBR	CS-1995
P520240903	32.00	24.00	28.20	15.00	21.5	31	NBR	CS-1188
P520250901	**35.00**	**25.00**	**31.40**	**16.40**	**29.1**	**33.5**	**NBR**	**CS-146**
P520250901	35.00	25.00	31.40	16.40	29.1	33.50	NBR	CS-1976
P520250905	35.00	25.00	31.40	16.40	29.1	33.50	NBR	CS-2796
P520270901	35.00	27.00	31.00	21.90	15.5	33.50	NBR	CS-370
P520260902	36.00	26.00	19.05	15.50	25	43.12	NBR	CS-873
P520250903	38.10	25.40	34.54	15.87	28.57	37.08	NBR	CS-590
P520280903	38.10	28.57	33.60	11.25	18.87	37.00	NBR	CS-2745
P520240902	**40.00**	**24.00**	**35.4**	**18.40**	**31.1**	**38.5**	**NBR**	**CS-261**
P520240906	40.00	24.00	35.4	18.40	31.1	38.5	NBR	CS-1596
P520240910	40.00	24.00	35.4	18.40	31.1	38.5	NBR	CS-2609
P520240902	40.00	24.00	35.4	18.40	31.1	38.5	NBR	CS-1982
P520246501	40.00	24.00	35.4	18.40	31.1	38.5	FKM	CS-1817
P520240904	40.00	24.00	35.50	20.50	26	38.5	NBR	CS-1276
P520260901	40.00	26.00	36	15.50	20.7	38.5	NBR	CS-339
P520260901	**40.00**	**26.00**	**36**	**15.50**	**20.7**	**39**	**NBR**	**CS-339**
P520260903	40.00	26.00	36	15.50	20.7	39	NBR	CS-2797
P520260901	40.00	26.00	36	15.50	20.7	39	NBR	CS-1852
P520266501	40.00	26.00	36	15.50	20.7	39	FKM	CS-3049
P520300904	40.00	30.00	36	12.50	20.5	39	NBR	CS-1387
P520300902	**40.00**	**30.00**	**37**	**12.50**	**20.5**	**39**	**NBR**	**CS-1864**
P520300907	40.00	30.00	37	12.50	20.5	39	NBR	CS-2769
P520300903	40.00	30.00	35.4	15.50	29.1	38.5	NBR	CS-535
P520300909	40.00	30.00	35.4	16.40	29.1	38.5	NBR	CS-2446
P520300910	40.00	30.00	35.4	16.40	29.1	38.5	NBR	CS-2610
P520306502	40.00	30.00	35.4	16.40	29.1	38.5	FKM	CS-3069
P520300901	**40.00**	**30.00**	**35.4**	**16.40**	**29.1**	**38.5**	**NBR**	**CS-129**
P520307802	40.00	30.00	35.4	16.40	29.1	38.5	NBR	CS-1831
P520300905	40.00	30.00	35.4	16.00	28.7	38.5	NBR	CS-1406
P520320902	40.00	32.00	37.00	10.00	18	38.5	NBR	CS-2791
P520320901	**40.00**	**32.00**	**36**	**15.50**	**21.9**	**39.4**	**NBR**	**CS-296**

Part No.	D (H9)	d (h9)	d1 (h9)	L (+0.2)	L1 (+0.2)	d2 (h11)	Matl.	Mould No.
P520320903	40.00	32.00	36	15.50	21.9	39.4	NBR	CS-2785
P520320904	40.00	32.00	36	15.50	21.9	39.4	NBR	CS-2834
P520326501	40.00	32.00	36	15.50	21.9	39.4	FKM	CS-2736
P520280901	**42.00**	**28.00**	**38**	**15.50**	**20.7**	**41**	**NBR**	**CS-295**
P520280904	42.00	28.00	38	15.50	20.7	41	NBR	CS-2798
P520250904	44.45	25.40	34.54	19.05	31.75	37.08	NBR	CS-589
P520280902	44.45	28.58	39.85	19.05	31.75	43.12	NBR	CS-1903
P520290901	**45.00**	**29.00**	**40.4**	**18.40**	**31.1**	**43.7**	**NBR**	**CS-132**
P520290903	45.00	29.00	40.4	18.40	31.1	43.7	NBR	CS-2784
P520290902	45.00	29.00	40.60	18.00	30.7	43.7	NBR	CS-1388
P520310901	45.00	31.00	41	15.50	20.7	44	NBR	CS-800
P520310903	45.00	31.00	41	15.50	20.7	44	NBR	CS-2783
P520350901	**45.00**	**35.00**	**40.4**	**16.40**	**29.1**	**43.5**	**NBR**	**CS-258**
P520370902	45.00	37.00	41	15.50	21.9	43.7	NBR	CS-2079
P520370903	45.00	37.00	41	15.50	21.9	43.7	NBR	CS-2799
P520340905	50.00	34.00	45.50	17.50	31.1	48	NBR	CS-1338
P520340905	50.00	34.00	45.50	17.50	31.1	48	NBR	CS-1360
P520347803	50.00	34.00	46	18.40	31.1	48	NBR	CS-811
P520340901	50.00	34.00	46	18.40	31.1	48	NBR	CS-1863
P520340906	50.00	34.00	46	18.40	31.1	48	NBR	CS-1549
P520340901	**50.00**	**34.00**	**45.40**	**18.40**	**31.1**	**48.50**	**NBR**	**CS-105**
P520340915	50.00	34.00	46	18.40	31.1	48	NBR	CS-2611
P520346503	50.00	34.00	46	18.40	31.1	48	FKM	CS-2109
P520340917	50.00	34.00	46	20.30	26.6	48	NBR	CS-2916
P520340904	50.00	34.00	46	20.50	26.7	49	NBR	CS-477
P520346505	50.00	34.00	46	20.00	26.2	48	FKM	CS-2003
P520340902	**50.00**	**34.00**	**46**	**20.00**	**26.2**	**48**	**NBR**	**CS-393**
P520350905	50.00	35.00	46	20.00	30	48.5	NBR	CS-2612
P520350902	**50.00**	**35.00**	**46**	**20.00**	**30**	**48.5**	**NBR**	**CS-278**
P520380902	50.00	38.00	46	20.50	28.9	49.4	NBR	CS-1343
P520386501	50.00	38.00	46	20.50	29	48.5	FKM	CS-2652
P520380910	50.00	38.00	46	20.50	28.9	49.4	NBR	CS-2613
P520400903	50.00	40.00	47	12.50	20.5	49	NBR	CS-2614
P520400901	50.00	40.00	47	12.50	20.5	49	NBR	CS-1787
P520340913	50.80	34.79	46.40	19.05	31.75	49.48	NBR	CS-2565
P520340907	50.80	34.92	46.23	19.05	31.75	49.48	NBR	CS-1489
P520340916	50.80	34.93	46.23	19.05	31.75	49.48	NBR	CS-2782
P520410902	50.80	41.28	46.30	11.11	18.73	49.48	NBR	CS-2781
P520390901	**55.00**	**39.00**	**50.36**	**18.40**	**31.1**	**53.5**	**NBR**	**CS-131**
P520396501	55.00	39.00	50.36	18.40	31.1	53.5	FKM	CS-2159
P520390906	55.00	39.00	50.36	18.40	31.1	53.5	NBR	CS-2615
P520390905	55.00	39.00	50.36	18.40	31.1	53.5	NBR	CS-2032
P520390903	55.00	39.00	50.36	18.40	31.1	53.5	NBR	CS-1590
P520390902	55.00	39.00	51.00	20.50	26.7	54.00	NBR	CS-812
P520430901	55.00	43.00	51.00	20.50	28.9	53.5	NBR	CS-1273
P520400904	56.00	40.00	52.00	20.50	26.7	54.50	NBR	CS-2812
P520410901	57.15	41.28	52.55	19.05	31.75	55.8	NBR	CS-1893
P520440901	**60.00**	**44.00**	**55.4**	**18.40**	**31.1**	**58.5**	**NBR**	**CS-264**
P520446501	60.00	44.00	55.4	18.40	31.1	58.5	FKM	CS-1580
P520440903	60.00	44.00	55.4	18.40	31.1	58.5	NBR	CS-2780
P520447802	60.00	44.00	55.4	18.40	30.7	58.5	NBR	CS-786
P520440902	**60.00**	**44.00**	**56**	**20.50**	**26.7**	**59**	**NBR**	**CS-635**

Bold sizes are readily available in stock.
Other materials are available on request.

P52

Double Acting Piston Compact Seal

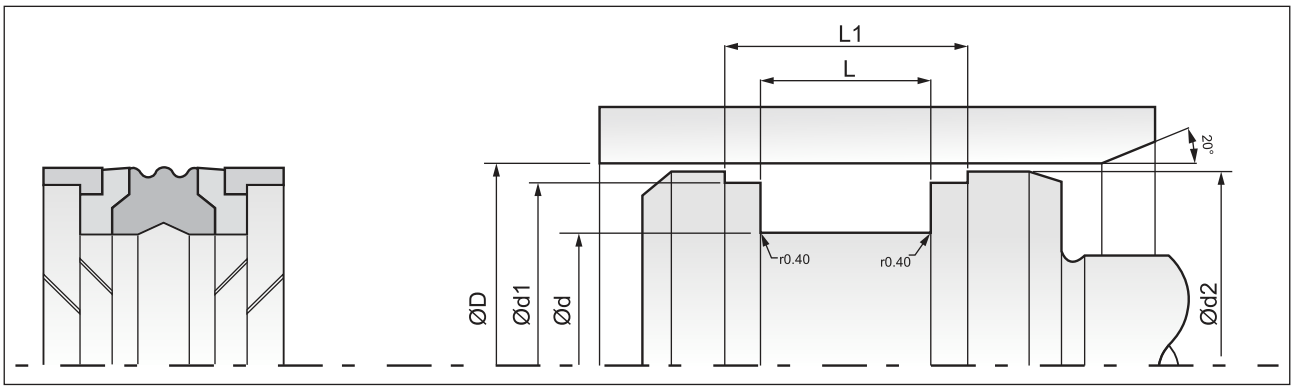

Part No.	D (H9)	d (h9)	d1 (h9)	L (+0.2)	L1 (+0.2)	d2 (h11)	Matl.	Mould No.
P520440904	60.00	44.00	56	20.50	26.7	59	NBR	CS-2779
P520480901	**60.00**	**48.00**	**56**	**20.50**	**28.9**	**59.4**	**NBR**	**CS-262**
P520480903	60.00	48.00	56	20.50	28.9	59.4	NBR	CS-2778
P520477803	63.00	47.00	58	18.40	31.1	61.5	NBR	CS-856
P520470911	63.00	47.00	58	18.40	31.1	61.5	NBR	CS-1584
P520470901	**63.00**	**47.00**	**58**	**18.40**	**31.1**	**61.5**	**NBR**	**CS-116**
P520476504	63.00	47.00	58	18.40	31.1	61.5	FKM	CS-1736
P520470919	63.00	47.00	58	18.40	31.1	61.5	NBR	CS-2777
P520476508	63.00	47.00	58	19.40	32.1	61.5	FKM	CS-2439
P520470915	63.00	47.00	58	19.40	32.1	61.5	NBR	CS-1892
P520477802	63.00	47.00	58	19.00	31.7	61.5	NBR	CS-782
P520470902	**63.00**	**47.00**	**59**	**20.50**	**28.9**	**62**	**NBR**	**CS-265**
P520476701	63.00	47.00	59	20.50	28.9	62	FKM	CS-2142
P520470914	63.00	47.00	59	20.50	26.7	62	NBR	CS-1891
P520488501	63.00	48.00	59	20.50	30	61.50	FKM	CS-1585
P520480902	**63.00**	**48.00**	**59**	**20.00**	**30**	**61.5**	**NBR**	**CS-340**
P520510901	**63.00**	**51.00**	**59**	**20.50**	**28.9**	**62.4**	**NBR**	**CS-204**
P520516501	63.00	51.00	59	20.50	28.9	62.4	FKM	CS-1781
P520510903	63.00	51.00	59	20.50	28.9	62.4	NBR	CS-2617
P520530903	63.00	53.00	60	12.50	20.5	62	NBR	CS-2618
P520530901	63.00	53.00	60	12.50	20.5	62	NBR	CS-1894
P520470913	63.50	47.62	58.9	19.05	31.75	62.12	NBR	CS-1876
P520470910	63.50	47.62	58.9	19.05	31.75	62.12	NBR	CS-1512
P520470917	63.50	47.62	58.9	19.05	31.75	62.12	NBR	CS-2457
P520477806	63.50	47.62	58.9	19.00	31.7	62.12	PU	CS-1115
P520470918	63.50	47.63	58.9	19.05	31.75	62.12	NBR	CS-2616
P520500808	63.50	50.80	58.9	16.51	28.7	62.12	NBR	CS-2445
P520490902	65.00	49.00	61	20.50	26.7	64	NBR	CS-2776
P520490901	65.00	49.00	61	26.70	20.5	64	NBR	CS-266
P520500908	65.00	50.00	60.4	18.40	31.1	64	NBR	CS-2619
P520500901	**65.00**	**50.00**	**60.4**	**18.40**	**31.1**	**64**	**NBR**	**CS-142**
P520500905	65.00	50.00	60.40	18.00	30.7	64	NBR	CS-1389
P520500911	69.85	50.80	64.07	23.80	36.5	68.85	NBR	CS-2873
P520500904	69.85	50.80	64.07	30.15	42.85	68.85	NBR	CS-1056
P520570901	69.85	57.15	65.85	16.51	29.21	68.85	NBR	CS-1043
P520507802	70.00	50.00	64.2	22.40	35.1	68.34	NBR	CS-804
P520500902	**70.00**	**50.00**	**64.2**	**22.40**	**35.1**	**68.34**	**NBR**	**CS-114**
P520506501	70.00	50.00	64.2	22.40	35.1	68.34	FKM	CS-1431
P520500906	70.00	50.00	64.2	22.40	35.1	68.34	NBR	CS-1605
P520506502	70.00	50.00	64.2	22.40	35.1	68.34	FKM	CS-1579
P520500902	**70.00**	**50.00**	**64.2**	**22.40**	**35.1**	**68.34**	**NBR**	**CS-773**
P520500910	70.00	50.00	64.2	22.40	35.1	68.34	NBR	CS-2790
P520546501	70.00	54.00	66	20.50	26.7	69	FKM	CS-1494
P520540901	**70.00**	**54.00**	**66**	**20.50**	**26.7**	**69**	**NBR**	**CS-297**
P520540902	70.00	54.00	66	20.50	26.7	69	NBR	CS-2789
P520550905	70.00	55.00	66	20.00	30	68.5	NBR	CS-2788
P520550902	70.00	55.00	66	20.00	30	68.5	NBR	CS-872
P520580903	70.00	58.00	66	20.50	28.90	68.5	NBR	CS-1875
P520580901	**70.00**	**58.00**	**66**	**20.50**	**28.90**	**68.5**	**NBR**	**CS-298**
P520580905	70.00	58.00	66	20.50	28.90	68.5	NBR	CS-2631
P520550901	**75.00**	**55.00**	**69.2**	**22.40**	**35.1**	**73.32**	**NBR**	**CS-117**
P520550906	75.00	55.00	69.2	22.40	35.1	73.32	NBR	CS-2787

Part No.	D (H9)	d (h9)	d1 (h9)	L (+0.2)	L1 (+0.2)	d2 (h11)	Matl.	Mould No.
P520550904	75.00	55.00	69.20	22.00	34.7	74	NBR	CS-1390
P520590901	75.00	59.00	71.00	20.50	26.7	74	NBR	CS-1861
P520590902	75.00	59.00	71.00	20.50	26.7	74	NBR	CS-2775
P520590901	75.00	59.00	71.00	26.70	20.5	74	NBR	CS-371
P520630901	75.00	63.00	71	20.50	28.9	74	NBR	CS-1046
P520570906	76.20	57.15	70.38	23.62	36.32	74.5	NBR	CS-2561
P520570905	76.20	57.15	70.38	23.80	36.5	74.5	NBR	CS-2450
P520570903	76.20	57.15	70.38	23.80	36.7	74.5	NBR	CS-1944
P520570907	76.20	57.15	70.38	23.81	36.51	74.5	NBR	CS-2755
P520600904	76.20	60.32	72.20	19.39	31.65	74.16	NBR	CS-1044
P520600906	76.20	60.33	70.96	19.05	31.75	74.16	NBR	CS-1895
P520600911	76.20	60.33	70.96	19.05	31.75	74.16	NBR	CS-2630
P520660906	76.20	66.67	71.62	10.18	18.22	74.60	NBR	CS-2646
P520660907	76.20	66.68	71.62	11.11	18.73	74.60	NBR	CS-2819
P520607802	80.00	60.00	74.15	22.40	35.1	78.34	NBR	CS-1370
P520600901	**80.00**	**60.00**	**74.15**	**22.40**	**35.1**	**78.34**	**NBR**	**CS-160**
P520607802	80.00	60.00	74.15	22.40	35.1	78.34	NBR	CS-763
P520600905	80.00	60.00	74.15	22.40	35.1	78.34	NBR	CS-1606
P520606503	80.00	60.00	74.15	22.40	35.1	78.34	FKM	CS-1564
P520606502	80.00	60.00	74.15	22.40	35.1	78.34	FKM	CS-1862
P520600901	80.00	60.00	74.15	22.40	35.1	78.34	NBR	CS-775
P520600909	80.00	60.00	74.15	22.40	35.1	78.34	NBR	CS-2447
P520600910	80.00	60.00	74.15	22.40	35.1	78.34	NBR	CS-2453
P520600908	80.00	60.00	74.15	22.40	35.1	78.34	NBR	CS-2756
P520606507	80.00	60.00	74.15	22.40	38.1	78.34	FKM	CS-1980
P520600902	**80.00**	**60.00**	**75**	**25.40**	**38.1**	**78**	**NBR**	**CS-280**
P520626501	80.00	62.00	76	22.40	29.7	79	FKM	CS-1711
P520620901	80.00	62.00	76	22.50	29.7	79	NBR	CS-1911
P520620904	80.00	62.00	76	22.50	29.7	79	NBR	CS-2827
P520620901	**80.00**	**62.00**	**76**	**22.50**	**29.7**	**79**	**NBR**	**CS-173**
P520656701	80.00	65.00	76	20.00	30	79	FKM	CS-2143
P520650901	**80.00**	**65.00**	**76**	**20.00**	**30**	**79**	**NBR**	**CS-595**
P520650904	80.00	65.00	76	20.00	30	79	NBR	CS-1908
P520660903	80.00	66.00	76	22.40	32.8	79	NBR	CS-1896
P520660904	80.00	66.00	76	22.40	32.8	79	NBR	CS-2830
P520666501	80.00	66.00	76	22.50	32.9	79.4	FKM	CS-937
P520660902	80.00	66.00	76	22.50	32.9	79.4	NBR	CS-996
P520630905	82.55	63.50	76.73	24.20	36.9	80.90	NBR	CS-2454
P520630902	83.00	63.00	77.16	22.40	35.1	82.00	NBR	CS-1046
P520650908	85.00	65.00	79.16	21.40	34.1	83.30	NBR	CS-2815
P520650902	85.00	65.00	79.15	22.40	35.1	83.3	NBR	CS-1836
P520650902	**85.00**	**65.00**	**79.15**	**22.40**	**35.1**	**83.3**	**NBR**	**CS-103**
P520650907	85.00	65.00	79.15	22.40	35.1	83.3	NBR	CS-2629
P520650903	85.00	65.00	79.15	22.00	34.7	83.3	NBR	CS-1391
P520710901	85.00	71.00	81.00	22.50	32.9	83.3	NBR	CS-2924
P520680901	88.00	68.00	82.20	35.10	22.4	87.00	NBR	CS-257
P520690901	88.90	69.85	83.06	23.62	36.32	87.30	NBR	CS-2563
P520707801	90.00	70.00	84.15	22.40	35.1	88.3	NBR	CS-818
P520706501	90.00	70.00	84.15	22.40	35.1	88.3	FKM	CS-1582
P520700902	90.00	70.00	84.15	22.40	35.1	88.3	NBR	CS-1600
P520700901	**90.00**	**70.00**	**84.15**	**22.40**	**35.1**	**88.3**	**NBR**	**CS-118**
P520700903	90.00	70.00	84.15	22.40	35.1	88.3	NBR	CS-2757

Bold sizes are readily available in stock.
Other materials are available on request.

P52

Double Acting Piston Compact Seal

MAX SPARE LIMITED
QUALITY. PRECISION. SPEED.

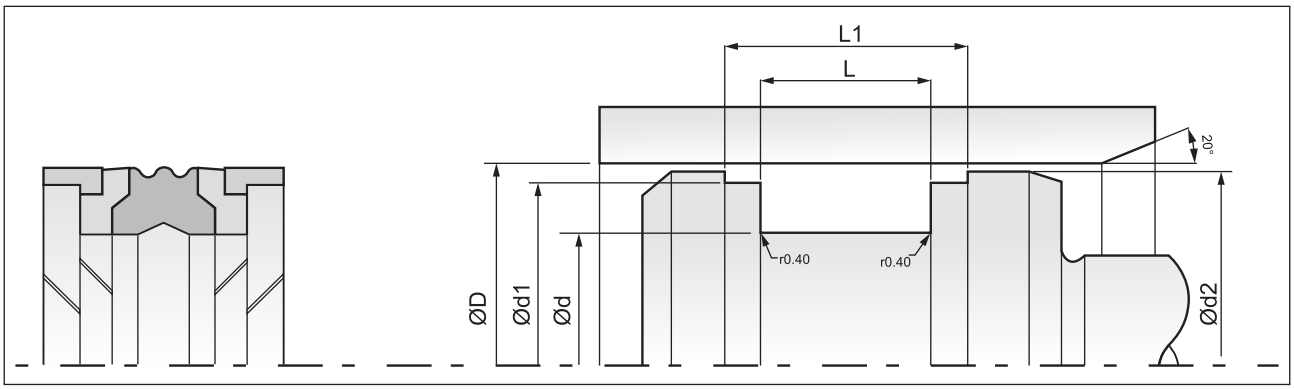

Part No.	D (H9)	d (h9)	d1 (h9)	L (+0.2)	L1 (+0.2)	d2 (h11)	Matl.	Mould No.
P520720903	90.00	72.00	86	22.50	28.9	89	NBR	CS-1897
P520720902	90.00	72.00	86	22.50	29.7	89	NBR	CS-1909
P520750912	90.00	75.00	86	20.00	30	88.5	NBR	CS-2758
P520750912	90.00	75.00	86	20.00	30	88.5	NBR	CS-2758
P520750909	90.00	75.00	86	20.00	30	88.5	NBR	CS-1910
P520750903	90.00	75.00	86	20.00	30	88.5	NBR	CS-1047
P520750906	90.00	75.00	86	22.50	33	88.5	NBR	CS-1275
P520760902	90.00	76.00	86	22.40	32.8	88.5	NBR	CS-1898
P520760903	90.00	76.00	86	22.40	32.8	88.5	NBR	CS-2829
P520760901	90.00	76.00	86	22.50	32.9	89.40	NBR	CS-1437
P520820907	92.00	82.00	88.46	13.00	25.8	91.00	NBR	CS-2207
P520750913	95.00	75.00	89.15	22.40	35.1	93.3	NBR	CS-2759
P520750901	**95.00**	**75.00**	**89.15**	**22.40**	**35.1**	**93.3**	**NBR**	**CS-156**
P520750907	95.00	75.00	89.15	22.00	34.7	93.3	NBR	CS-1392
P520750902	**100.00**	**75.00**	**93.15**	**22.40**	**35.1**	**98**	**NBR**	**CS-777**
P520757803	100.00	75.00	93.15	22.40	35.1	98	NBR	CS-855
P520750910	100.00	75.00	93.15	22.40	35.1	98	NBR	CS-1906
P520750908	100.00	75.00	93.15	22.40	35.1	98	NBR	CS-1601
P520756503	100.00	75.00	93.15	22.40	35.1	98	FKM	CS-1992
P520750911	100.00	75.00	93.15	22.40	35.1	98	NBR	CS-2760
P520750908	100.00	75.00	93.15	22.40	35.1	98	NBR	CS-1550
P520757802	100.00	75.00	93.15	22.40	35.1	98	NBR	CS-124
P520806701	100.00	80.00	95	25.40	38.1	98	FKM	CS-2145
P520800901	**100.00**	**80.00**	**95**	**25.40**	**38.1**	**98**	**NBR**	**CS-279**
P520820901	**100.00**	**82.00**	**96**	**22.50**	**29.7**	**99**	**NBR**	**CS-136**
P520820904	100.00	82.00	96	22.50	29.7	99	NBR	CS-1907
P520826501	100.00	82.00	96	22.50	29.7	99	FKM	CS-2643
P520850908	100.00	85.00	96	20.00	30	98.5	NBR	CS-2761
P520857802	100.00	85.00	96	20.00	30	98.5	NBR	CS-1953
P520856503	100.00	85.00	96	20.00	30	98.5	FKM	CS-2140
P520850904	100.00	85.00	96	20.00	30	98.5	NBR	CS-1899
P520860902	100.00	86.00	96	22.40	32.8	98.5	NBR	CS-1900
P520860901	**100.00**	**86.00**	**96**	**22.50**	**32.9**	**98.5**	**NBR**	**CS-293**
P520820910	101.60	82.55	95.76	23.80	36.5	100	NBR	CS-2455
P520820905	101.60	82.55	95.76	23.81	36.51	100	NBR	CS-1902
P520820902	101.60	82.55	95.76	24.21	36.91	100	NBR	CS-573
P520880901	101.60	88.90	97.60	13.97	24.43	100	NBR	CS-1048
P520800902	**105.00**	**80.00**	**98.1**	**22.40**	**35.1**	**103**	**NBR**	**CS-149**
P520880904	107.95	88.90	102.08	23.80	36.5	106.23	NBR	CS-2456
P520880902	107.95	88.90	102.08	24.21	36.91	106.23	NBR	CS-1049
P520850901	**110.00**	**85.00**	**103**	**22.40**	**35.1**	**108**	**NBR**	**CS-110**
P520850910	110.00	85.00	103	22.40	35.1	108	NBR	CS-2628
P520850903	110.00	85.00	103.20	22.00	34.7	108	NBR	CS-1393
P520850906	110.00	85.00	103.10	25.40	38.1	108	NBR	CS-2816
P520857801	110.00	85.00	103	22.40	35.1	108	NBR	CS-400
P520850902	110.00	85.00	103.1	25.40	38.1	108	NBR	CS-537
P520900903	110.00	90.00	104.10	25.30	38	108	NBR	CS-2832
P520920901	**110.00**	**92.00**	**106**	**22.50**	**29.7**	**109**	**NBR**	**CS-1022**
P520920902	110.00	92.00	106	22.50	29.7	109	NBR	CS-3071
P520950907	110.00	95.00	105	20.00	30	108	NBR	CS-2627
P520950906	110.00	95.00	106.00	22.50	32.9	108	NBR	CS-2124
P520960902	110.00	96.00	106.00	18.50	32.5	108	NBR	CS-1581

Part No.	D (H9)	d (h9)	d1 (h9)	L (+0.2)	L1 (+0.2)	d2 (h11)	Matl.	Mould No.
P520960901	110.00	96.00	106	22.40	32.8	109.4	NBR	CS-374
P520880905	114.30	88.90	107.42	31.75	44.45	112.33	NBR	CS-2458
P520900902	115.00	90.00	108	22.40	35.1	113.00	NBR	CS-1593
P520900901	**115.00**	**90.00**	**108**	**22.40**	**35.1**	**113.00**	**NBR**	**CS-119**
P520907801	115.00	90.00	108	22.40	35.1	113.00	NBR	CS-853
P520950905	115.00	95.00	108	22.40	35.1	113.00	NBR	CS-2125
P520970902	115.00	97.00	111.00	22.40	29.6	114.00	NBR	CS-2813
P520970903	115.00	97.00	111.00	22.40	30.8	114.00	NBR	CS-2814
P520970901	115.00	97.00	111.00	22.50	29.7	114.00	NBR	CS-757
P521010901	115.00	101.00	111.00	22.40	32.8	114.00	NBR	CS-2208
P520950903	120.00	95.00	113	22.40	35.1	118	NBR	CS-1466
P520950901	**120.00**	**95.00**	**113**	**22.40**	**35.1**	**118**	**NBR**	**CS-147**
P520950904	120.00	95.00	113	22.40	35.1	118	NBR	CS-1592
P520950904	120.00	95.00	113	22.40	35.1	118	NBR	CS-1602
P520956501	120.00	95.00	113	22.40	35.1	118	NBR	CS-1701
P520950908	120.00	95.00	113	22.40	35.1	118	NBR	CS-2765
P520950902	120.00	95.00	113.10	22.00	34.7	118	NBR	CS-1394
P521000905	120.00	100.00	114.30	25.00	37.6	118	NBR	CS-1050
P521020901	120.00	102.00	114	22.50	30	118	NBR	CS-1274
P5210690902	120.00	106.00	116	22.40	32.8	119.4	NBR	CS-2764
P521060901	120.00	106.00	116	22.50	32.9	118.5	NBR	CS-283
P521000901	125.00	100.00	118	25.40	38.1	122.96	NBR	CS-776
P521007802	125.00	100.00	118	25.40	38.1	122.96	NBR	CS-767
P521000902	125.00	100.00	118	25.40	38.1	122.96	NBR	CS-2649
P521000909	125.00	100.00	118	25.40	38.1	122.96	NBR	CS-2448
P521000910	125.00	100.00	118	25.40	38.1	122.96	NBR	CS-2626
P521006503	125.00	100.00	118	25.40	38.1	122.96	FKM	CS-1570
P521000901	**125.00**	**100.00**	**118**	**25.40**	**38.1**	**122.96**	**NBR**	**CS-112**
P521006501	125.00	100.00	118	25.40	38.1	122.96	FKM	CS-1128
P521006502	125.00	100.00	119	32.40	52.4	123	FKM	CS-1214
P521030901	125.00	103.00	121	26.50	36.7	124	NBR	CS-1963
P521030902	125.00	103.00	121	26.50	36.7	124	NBR	CS-2763
P521030901	**125.00**	**103.00**	**121**	**26.50**	**36.7**	**124**	**NBR**	**CS-125**
P521036501	125.00	103.00	121	26.50	36.7	124	FKM	CS-1996
P521050910	125.00	105.00	120	25.00	37.7	123	NBR	CS-2820
P521050909	125.00	105.00	120	25.40	38.1	123	NBR	CS-2451
P521050901	**125.00**	**105.00**	**120**	**25.40**	**38.1**	**123**	**NBR**	**CS-292**
P521080902	125.00	108.00	121	26.50	40.9	124.4	NBR	CS-896
P521080901	**125.00**	**108.00**	**121**	**26.50**	**40.9**	**124.4**	**NBR**	**CS-338**
P521080904	125.00	108.00	121	26.50	40.9	124.4	NBR	CS-2762
P521080905	125.00	108.00	121	26.50	40.9	124.4	NBR	CS-2831
P521010902	127.00	101.60	120.10	31.75	50.8	125	NBR	CS-2449
P521050903	130.00	105.00	123.1	25.40	38.1	128	NBR	CS-1021
P521050902	130.00	105.00	122.6	25.40	44.4	127.5	NBR	CS-1847
P521050902	130.00	105.00	122.6	25.40	44.4	127.5	NBR	CS-1853
P521056501	130.00	105.00	122.6	25.40	44.4	127.5	FKM	CS-1710
P521050902	**130.00**	**105.00**	**122.6**	**25.40**	**44.4**	**127.5**	**NBR**	**CS-282**
P521050911	130.00	105.00	122.6	25.40	44.45	127.5	NBR	CS-2811
P521050905	130.00	105.00	122.60	25.00	44.04	127.5	NBR	CS-1395
P521100903	135.00	110.00	128	25.40	38.1	133	NBR	CS-2768
P521100904	135.00	110.00	127.6	25.40	44.45	132.5	NBR	CS-2767
P521100902	**135.00**	**110.00**	**128**	**25.40**	**38.1**	**133**	**NBR**	**CS-263**

Bold sizes are readily available in stock.
Other materials are available on request.

P52

Double Acting Piston Compact Seal

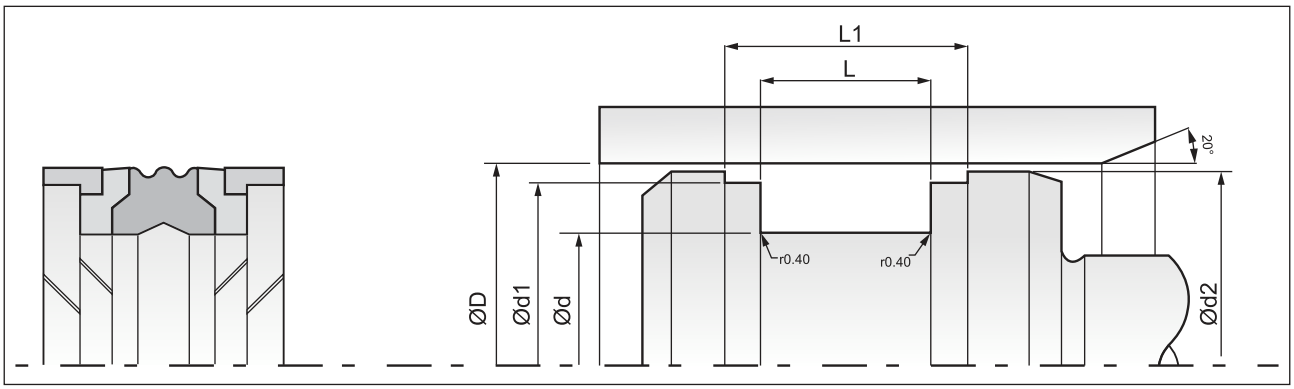

Part No.	D (H9)	d (h9)	d1 (h9)	L (+0.2)	L1 (+0.2)	d2 (h11)	Matl.	Mould No.
P521100901	**135.00**	**110.00**	**127.6**	**25.40**	**44.4**	**132.5**	**NBR**	**CS-**
P521140901	139.70	114.30	132.4	31.75	50.8	137.2	NBR	CS-1051
P521150908	140.00	115.00	133	25.40	38.1	138	NBR	CS-1912
P521150907	140.00	115.00	133	25.40	38.1	138	NBR	CS-1919
P521156501	140.00	115.00	133	25.40	38.1	138	FKM	CS-2653
P521150910	140.00	115.00	133	25.40	38.1	138	NBR	CS-2828
P521150911	140.00	115.00	133	25.40	38.1	138	NBR	CS-2638
P521150903	**140.00**	**115.00**	**133**	**25.40**	**38.1**	**138**	**NBR**	**CS-270**
P521150903	140.00	115.00	133	25.40	38.1	138	NBR	CS-1558
P521150901	**140.00**	**115.00**	**132.6**	**25.40**	**44.4**	**137.5**	**NBR**	**CS-139**
P521150912	140.00	115.00	132.6	25.40	44.4	137.5	NBR	CS-2637
P521150909	140.00	115.00	132.6	25.40	44.4	137.5	NBR	CS-2818
P521150905	140.00	115.00	132.6	25.00	37.7	137.5	NBR	CS-1396
P521150904	140.00	115.00	132.6	25.00	44.4	137.5	NBR	CS-914
P521150913	140.00	115.00	134	32.00	52	137.50	NBR	CS-3007
P521180902	140.00	118.00	136	26.50	36.7	139	NBR	CS-2817
P521180901	**140.00**	**118.00**	**136**	**36.70**	**26.5**	**139**	**NBR**	**CS-459**
P521200905	140.00	120.00	135	25.00	37.7	138	NBR	CS-2822
P521200904	140.00	120.00	135	25.00	37.7	138	NBR	CS-2452
P521230901	140.00	123.00	136	26.50	40.9	138.5	NBR	CS-997
P521200902	**145.00**	**120.00**	**138.3**	**25.40**	**38.1**	**142.95**	**NBR**	**CS-126**
P521200906	145.00	120.00	137.60	25.40	44.44	142.50	NBR	CS-2823
P521250902	**150.00**	**125.00**	**143**	**25.40**	**38.1**	**148**	**NBR**	**CS-1565**
P521256501	150.00	125.00	143	25.40	50.8	148	FKM	CS-966
P521256503	150.00	125.00	143	25.40	38.1	148	FKM	CS-1801
P521250903	150.00	125.00	143	25.40	38.1	148	NBR	CS-2636
P521250904	150.00	125.00	142.6	25.40	44.4	147.5	NBR	CS-2635
P521250901	**150.00**	**125.00**	**142.6**	**25.40**	**44.4**	**147.5**	**NBR**	**CS-202**
P521256502	150.00	125.00	142.6	25.40	44.4	147.5	FKM	CS-1661
P521256504	150.00	125.00	143	27.00	47	147.5	FKM	CS-2842
P521286701	150.00	128.00	146	26.50	36.7	149	FKM	CS-2144
P521280901	**150.00**	**128.00**	**146**	**26.50**	**36.7**	**149**	**NBR**	**CS-476**
P521270905	152.40	127.00	145	31.75	50.8	149.91	NBR	CS-741
P521270901	152.40	127.00	145.56	32.15	44.85	149.91	NBR	CS-1052
P521300906	155.00	130.00	148.00	25.40	38.1	153	NBR	CS-2126
P521300901	**155.00**	**130.00**	**147.6**	**25.40**	**44.4**	**152.5**	**NBR**	**CS-169**
P521300902	**160.00**	**130.00**	**153**	**25.40**	**38.1**	**158**	**NBR**	**CS-284**
P521300910	160.00	130.00	153	25.40	38.1	158	NBR	CS-2648
P521300909	160.00	130.00	152.6	25.40	44.4	157.5	NBR	CS-2633
P521300908	160.00	130.00	152.6	25.40	44.4	157.5	NBR	CS-2634
P521300903	**160.00**	**130.00**	**152.6**	**25.40**	**44.4**	**157.5**	**NBR**	**CS-300**
P521307801	160.00	130.00	153.2	25.00	44.4	157.5	NBR	CS-883
P521356502	160.00	135.00	152.6	25.40	44.4	157.5	FKM	CS-1170
P521350902	160.00	135.00	152.6	25.40	44.4	157.5	NBR	CS-1472
P521356505	160.00	135.00	152.6	25.40	44.4	157.5	FKM	CS-2650
P521350901	**160.00**	**135.00**	**152.6**	**25.40**	**44.4**	**157.5**	**NBR**	**CS-137**
P521380901	**160.00**	**138.00**	**156**	**26.50**	**36.7**	**159**	**NBR**	**CS-165**
P521380903	160.00	138.00	156	26.50	36.7	159	NBR	CS-2632
P521400907	160.00	140.00	155	25.00	37.7	158	NBR	CS-2620
P521400906	160.00	140.00	154.30	25.40	37.6	158	NBR	CS-1053
P521430902	160.00	143.00	156	26.50	40.9	159.40	NBR	CS-2821
P521400901	**165.00**	**140.00**	**157.6**	**25.40**	**44.4**	**162.5**	**NBR**	**CS-167**

Part No.	D (H9)	d (h9)	d1 (h9)	L (+0.2)	L1 (+0.2)	d2 (h11)	Matl.	Mould No.
P521400908	165.00	140.00	157.6	25.40	44.45	162.5	NBR	CS-2806
P521430901	165.00	143.00	161	26.50	36.7	162.5	NBR	CS-2647
P521400905	170.00	140.00	163	25.40	38.1	167	NBR	CS-366
P521450901	**170.00**	**145.00**	**161.7**	**25.40**	**50.8**	**167**	**NBR**	**CS-166**
P521450903	170.00	145.00	161.7	25.40	50.8	167	NBR	CS-2621
P521480901	170.00	148.00	166	26.50	36.7	167	NBR	CS-2770
P521500901	**175.00**	**150.00**	**166.7**	**25.40**	**50.8**	**171.1**	**NBR**	**CS-1020**
P521500906	175.00	150.00	168.30	25.40	38.1	171.1	NBR	CS-2622
P521500905	175.00	150.00	166.7	25.40	50.8	171.1	NBR	CS-1913
P521520903	177.80	152.40	170.52	31.75	44.65	175.52	NBR	CS-2771
P521520901	177.80	152.40	170.52	32.15	44.85	175.52	NBR	CS-1054
P521520902	177.80	152.40	169.60	44.45	69.85	175.52	NBR	CS-1464
P521500904	180.00	150.00	170.10	25.40	39.4	177.87	NBR	CS-934
P521506501	180.00	150.00	172.95	35.40	48.1	177.87	FKM	CS-1709
P521500903	**180.00**	**150.00**	**172.95**	**35.40**	**48.1**	**177.87**	**NBR**	**CS-187**
P521550903	180.00	155.00	171.7	25.40	50.8	177	NBR	CS-1468
P521550906	180.00	155.00	171.7	25.40	50.8	177	NBR	CS-2805
P521550901	**180.00**	**155.00**	**171.7**	**25.40**	**50.8**	**177**	**NBR**	**CS-168**
P521580904	180.00	158.00	176	26.50	36.7	179	NBR	CS-2623
P521580901	**180.00**	**158.00**	**176**	**26.50**	**36.7**	**179**	**NBR**	**CS-469**
P521630901	180.00	163.00	176	26.50	40.9	179.4	NBR	CS-1962
P521630903	180.00	163.00	176	26.50	40.9	179.4	NBR	CS-2772
P521600901	**185.00**	**160.00**	**176.7**	**25.40**	**50.8**	**182**	**NBR**	**CS-102**
P521650901	**190.00**	**165.00**	**181.7**	**25.40**	**50.8**	**187**	**NBR**	**CS-592**
P521700901	**195.00**	**170.00**	**186.7**	**25.40**	**50.8**	**198**	**NBR**	**CS-170**
P521706501	200.00	170.00	193	25.40	50.8	198	FKM	CS-2913
P521700902	**200.00**	**170.00**	**193**	**35.40**	**48.1**	**198**	**NBR**	**CS-2**87
P521707801	200.00	170.00	193	35.00	48	198	NBR	CS-884
P521756503	200.00	175.00	191.6	25.40	50.8	197	FKM	CS-1733
P521750901	**200.00**	**175.00**	**191.6**	**25.40**	**50.8**	**197**	**NBR**	**CS-141**
P521750904	200.00	175.00	191.6	25.40	50.8	197	NBR	CS-2773
P521750902	**200.00**	**175.00**	**196**	**31.50**	**44.7**	**199**	**NBR**	**CS-1587**
P521750903	200.00	175.00	196	31.50	44.7	199	NBR	CS-2625
P521800901	200.00	180.00	196	31.50	49.9	199.4	NBR	CS-1904
P521706502	200.00	170.00	192	36.00	61	200	FKM	CS-2980
P521770902	203.20	177.80	195.9	31.75	44.45	201.18	NBR	CS-2774
P521800903	210.00	180.00	202.70	32.40	45.1	207	NBR	CS-2624
P521850901	**210.00**	**185.00**	**201.6**	**25.40**	**50.8**	**207**	**NBR**	**CS-154**
P521900902	**220.00**	**190.00**	**212.7**	**35.40**	**48.1**	**270**	**NBR**	**CS-484**
P521900903	220.00	190.00	212.7	35.40	48.1	270	NBR	CS-2824
P521950901	**220.00**	**195.00**	**211.6**	**25.40**	**50.8**	**270**	**NBR**	**CS-203**
P521956502	220.00	195.00	211.6	25.40	50.8	270	FKM	CS-1365
P522000901	220.00	200.00	216	31.50	49.9	219.5	NBR	CS-1055
P522000903	220.00	200.00	216	31.50	49.9	219.5	NBR	CS-1920
P521950902	225.00	195.00	218	35.50	48.2	223	NBR	CS-2826
P521957801	225.00	195.00	218	35.00	48	223	NBR	CS-885
P522050902	230.00	205.00	221.6	25.40	50.8	227	NBR	CS-1467
P522050901	**230.00**	**205.00**	**221.6**	**25.40**	**50.8**	**227**	**NBR**	**CS-172**
P522050903	230.00	205.00	221.6	25.40	50.8	227	NBR	CS-2825
P522056501	230.00	205.00	221.6	25.40	50.8	227	FKM	CS-2441
P522150902	240.00	215.00	231.6	25.40	50.8	237	NBR	CS-2810
P522150901	**240.00**	**215.00**	**231.6**	**25.40**	**50.8**	**237**	**NBR**	**CS-153**

Bold sizes are readily available in stock.
Other materials are available on request.

P52

Double Acting Piston Compact Seal

MAX SPARE LIMITED
QUALITY. PRECISION. SPEED.

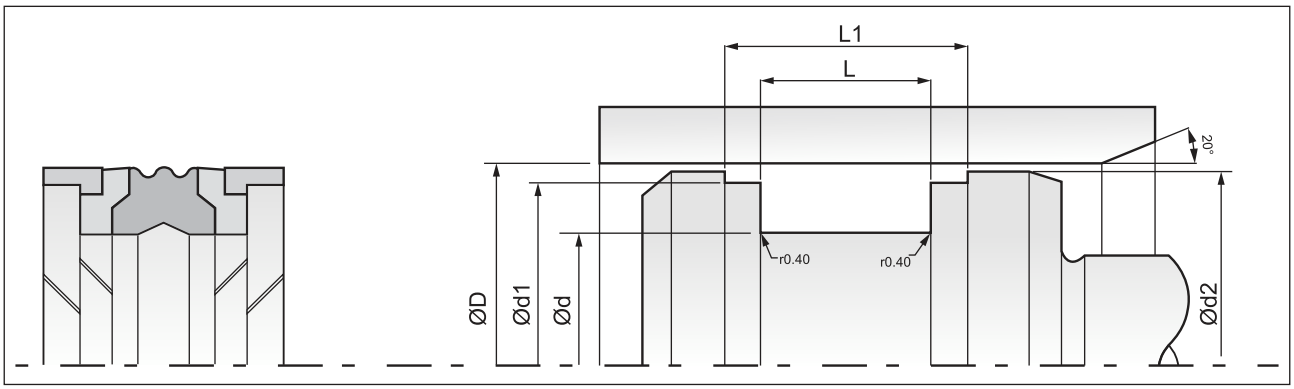

Part No.	D (H9)	d (h9)	d1 (h9)	L (+0.2)	L1 (+0.2)	d2 (h11)	Matl.	Mould No.
P522200901	**250.00**	**220.00**	**242.9**	**35.40**	**48.1**	**247**	**NBR**	**CS-593**
P522200902	250.00	220.00	242.9	35.40	48.1	247	NBR	CS-2809
P522256501	250.00	225.00	241.6	25.40	50.8	247	FKM	CS-2639
P522250904	250.00	225.00	241.6	25.40	50.8	247	NBR	CS-2808
P522250901	**250.00**	**225.00**	**241.6**	**25.40**	**50.8**	**247**	**NBR**	**CS-164**
P522251001	250.00	225.00	241.70	31.50	44.7	247	NBR	CS-1631

Part No.	D (H9)	d (h9)	d1 (h9)	L (+0.2)	L1 (+0.2)	d2 (h11)	Matl.	Mould No.
P522300901	250.00	230.00	246	31.50	49.9	247	NBR	CS-2807
P522266301	252.00	226.00	247	31.50	44.7	250	FKM	CS-2905
P522357801	260.00	235.00	253	25.00	50.4	258	NBR	CS-886
P522500902	280.00	250.00	272.9	35.40	54.44	277.85	NBR	CS-1703
P522750901	**300.00**	**275.00**	**291.6**	**25.40**	**50.8**	**298**	**NBR**	**CS-155**

Bold sizes are readily available in stock.
Other materials are available on request.

P66

Double Acting Piston Compact Seal

DETAILS

P66 double acting compact piston seal is designed for use with split pistons. It comprises of a precision moulded fabric reinforced nitrile sealing element and two thermoplastic bearing rings on the outside diameter. The fabric reinforces the nitrile element and absorbs hydraulic fluid to help reduce friction. The bearing rings help prevent extrusion, permit higher working pressures and allow larger clearances between the piston and cylinder.

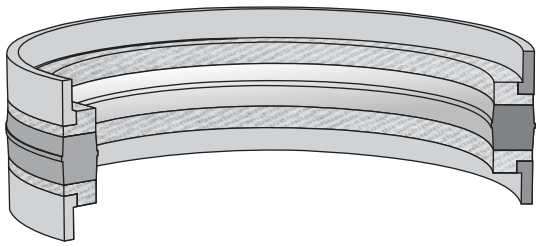

COMPATIBILITY

Mineral oils, hydraulic oils, water and air.

MATERIAL

Sealing Ring : Nitrile Rubber / Fabric 75/80 Shore A
Bearing rings : POM / Nylon

APPLICATION

Earth moving equipment, agricultural machinery, cranes, standard cylinders.

OPERATING CONDITIONS

Temperature Range : -20°C to + 100°C
Pressure : 500 Bar
Speed : 0.5 m/s

FEATURES

- High static and dynamic sealing application.
- Low friction.
- Well proven design.
- Tolerant to contamination.

SURFACE ROUGHNESS

Static : 1.6 µmRa
Dynamic : 0.4 µmRa

P66

Double Acting Piston Compact Seal

MAX SPARE LIMITED
QUALITY. PRECISION. SPEED.

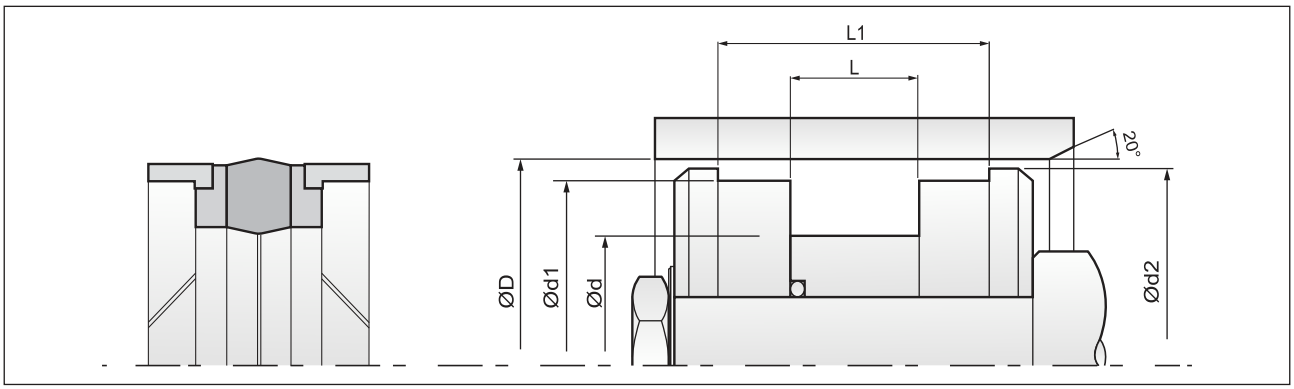

Part No.	D (H11)	d (h11)	L (+0.2)	L1 (+0.2)	d1 (h11)	d2	Material	Mould No.
P660228301	35.00	22.00	15.40	28.10	31.40	33.70	NBR/FABRIC	CS-619
P660258302	38.10	25.40	16.27	28.97	34.54	37.05	NBR/FABRIC	CS-833
P660248303	40.00	24.00	18.00	30.80	40.40	43.70	NBR/FABRIC	CS-1279
P660248302	45.00	24.00	18.40	31.10	40.40	43.70	NBR/FABRIC	CS-698
P660298302	45.00	29.00	18.00	30.80	40.40	43.70	NBR/FABRIC	CS-2836
P660348305	50.00	34.00	18.00	30.80	45.40	48.70	NBR/FABRIC	CS-1280
P660348306	50.00	34.00	18.00	30.80	45.40	48.70	NBR/FABRIC	CS-1663
P660348304	50.00	34.00	18.40	31.10	45.40	48.70	NBR/FABRIC	CS-313
P660348308	50.00	34.00	18.40	31.10	45.40	48.70	NBR/FABRIC	CS-2679
P660348301	50.80	34.92	19.45	32.15	46.22	49.50	NBR/FABRIC	CS-620
P660388302	53.97	38.10	19.45	32.15	49.37	53.70	NBR/FABRIC	CS-621
P660398302	55.00	39.00	18.40	31.10	50.40	53.70	NBR/FABRIC	CS-2678
P660398301	55.00	39.00	18.40	31.10	50.40	53.70	NBR/FABRIC	CS-314
P660418301	57.15	41.27	19.45	32.15	52.55	55.80	NBR/FABRIC	CS-622
P660448303	60.00	44.00	18.00	30.80	55.40	58.70	NBR/FABRIC	CS-1281
P660448304	60.00	44.00	18.40	31.10	55.40	58.70	NBR/FABRIC	CS-2749
P660448302	60.32	44.45	19.45	32.15	55.72	58.98	NBR/FABRIC	CS-623
P660478305	63.00	47.00	19.40	32.10	58.40	61.65	NBR/FABRIC	CS-696
P660478306	63.00	47.00	19.40	32.10	58.40	61.65	NBR/FABRIC	CS-2677
P660478303	63.50	47.62	19.05	31.75	58.90	62.13	NBR/FABRIC	CS-3009
P660478301	63.50	47.62	19.45	32.15	58.90	62.13	NBR/FABRIC	CS-315
P660508307	69.85	50.80	24.21	36.91	64.05	68.20	NBR/FABRIC	CS-2835
P660508304	69.85	50.80	30.50	43.20	62.99	68.20	NBR/FABRIC	CS-1426
P660508306	70.00	50.00	22.40	35.10	64.20	68.30	NBR/FABRIC	CS-2670
P660558302	75.00	55.00	22.40	35.10	69.20	73.30	NBR/FABRIC	CS-2671
P660578304	76.20	57.15	24.21	36.91	70.40	74.55	NBR/FABRIC	CS-342
P660608305	80.00	60.00	22.40	35.10	74.20	78.30	NBR/FABRIC	CS-2672
P660638302	82.55	63.50	24.21	36.91	76.73	80.90	NBR/FABRIC	CS-624
P660658302	85.00	65.00	22.40	35.10	79.20	83.35	NBR/FABRIC	CS-2673
P660708302	90.00	70.00	25.40	38.10	84.15	88.30	NBR/FABRIC	CS-939
P660738301	92.07	73.02	24.21	36.91	86.23	90.41	NBR/FABRIC	CS-625
P660758304	95.00	75.00	22.40	35.10	89.15	93.90	NBR/FABRIC	CS-2738
P660758305	95.00	75.00	22.40	35.10	89.15	93.90	NBR/FABRIC	CS-2868
P660758303	100.00	75.00	22.40	35.10	93.15	98.05	NBR/FABRIC	CS-2566
P660808304	100.00	80.00	25.40	38.10	94.15	98.31	NBR/FABRIC	CS-2739
P660888302	107.95	88.90	24.21	36.91	102.08	106.23	NBR/FABRIC	CS-626
P660858305	110.00	85.00	22.40	35.10	103.10	108.00	NBR/FABRIC	CS-2674
P660908304	110.00	90.00	22.40	38.10	104.15	108.30	NBR/FABRIC	CS-2740
P660888305	113.50	88.10	31.30	44.00	108.90	111.53	NBR/FABRIC	CS-1793
P660888303	114.30	88.90	32.15	44.85	107.42	112.33	NBR/FABRIC	CS-627
P660908305	115.00	90.00	22.40	35.10	108.10	113.00	NBR/FABRIC	CS-2741
P660958303	120.00	95.00	22.40	35.10	113.10	118.00	NBR/FABRIC	CS-2742
P661008305	125.00	100.00	25.40	38.10	118.10	123.00	NBR/FABRIC	CS-2675
P661058304	125.00	105.00	25.40	38.10	119.15	123.30	NBR/FABRIC	CS-2676
P661048302	130.00	104.00	36.00	55.00	123.10	128.00	NBR/FABRIC	CS-1122
P661148301	139.70	114.30	32.15	44.85	132.77	137.65	NBR/FABRIC	CS-697
P661158302	140.00	115.00	25.40	38.10	133.00	138.00	NBR/FABRIC	CS-2680
P661208304	140.00	120.00	25.40	38.10	134.10	138.30	NBR/FABRIC	CS-612
P661208301	145.00	120.00	25.40	38.10	138.30	142.95	NBR/FABRIC	CS-310
P661208303	146.05	120.65	32.15	44.85	139.10	144.00	NBR/FABRIC	CS-597
P661258303	150.00	125.00	25.40	38.10	143.00	148.00	NBR/FABRIC	CS-2669
P661258302	150.00	125.00	25.40	44.60	143.00	148.00	NBR/FABRIC	CS-1536

Bold sizes are readily available in stock.
Other materials are available on request.

P66

Double Acting Piston Compact Seal

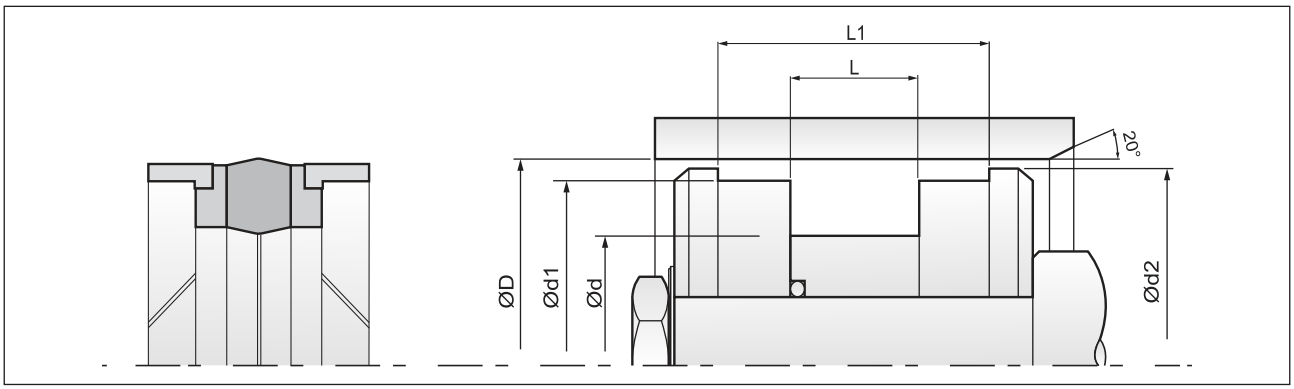

Part No.	D (H11)	d (h11)	L (+0.2)	L1 (+0.2)	d1 (h11)	d2	Material	Mould No.
P661278301	152.40	127.00	32.15	44.85	145.44	150.35	NBR/FABRIC	CS-870
P661278501	152.40	127.00	32.15	44.85	145.44	150.35	FKM/FABRIC	SUG-324
P661308302	155.00	130.00	25.40	38.10	148.00	153.00	NBR/FABRIC	CS-319
P661408302	170.00	140.00	25.40	38.10	162.95	167.87	NBR/FABRIC	CS-552
P661458301	175.00	145.00	35.40	48.10	167.95	172.87	NBR/FABRIC	CS-628
P661508302	180.00	150.00	35.40	48.10	172.95	177.87	NBR/FABRIC	CS-2180
P661608305	180.00	160.00	31.40	44.10	172.95	177.87	NBR/FABRIC	CS-2743
P661608304	190.00	160.00	35.40	48.10	182.93	187.87	NBR/FABRIC	CS-2744
P661608303	190.00	160.00	35.40	48.10	182.93	187.87	NBR/FABRIC	CS-629
P661708302	200.00	170.00	35.40	48.10	192.96	197.84	NBR/FABRIC	CS-1856
P661778301	203.20	177.80	32.15	44.85	196.16	201.03	NBR/FABRIC	CS-630
P662208301	250.00	220.00	35.40	48.10	242.90	247.86	NBR/FABRIC	CS-553
P662708301	300.00	270.00	35.40	48.10	292.90	297.86	NBR/FABRIC	CS-631

Bold sizes are readily available in stock.
Other materials are available on request.

P60

Double Acting Piston Compact Seal

DETAILS

P60 is a robust heavy duty double acting piston seal commonly used for the most demanding high-pressure application. It comprises of a T-shaped elastomer (NBR) which provides the initial energizing for effective sealing at low and high pressures. The elastomer preloads a composite PTFE ring against the tube wall and the thermoplastic bearing provides resistance to extrusion to the NBR sealing element. The P60 seal integrates the benefits of compact design, low friction and high performance in a single piston seal. Its design offers overall stability, wear resistance, sealability, low friction compact grooves, easy installation and maintenance free long life.

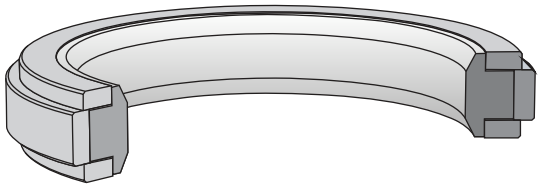

COMPATIBILITY

Mineral oils, bio oils, water soluble & water glycol fluids.

MATERIAL

Sealing ring : Bronze filled PTFE
Energizer ring : NBR 80 Shore A
Bearing rings : POM / Nylon

APPLICATION

- Heavy duty cylinders.
- Injection moulding machines.
- Earthmoving equipment.
- Excavators.
- Presses.

OPERATING CONDITIONS

Temperature Range : -30°C to + 100°C
Pressure : 500 Bar
Speed : 1.5 m/s

FEATURES

- High pressure capability.
- Excellent pressure surge absorption capability.
- Best combination for load holding and low friction sealing.
- High resistance to abrasion.

SURFACE ROUGHNESS

Static : 0.8 µmRa
Dynamic : 0.4 µmRa

INSTALLATION & ASSEMBLY

Careful installation is a prerequisite for the correct function of the seal. The groove must be free from pores, scratches etc.

PERMISSIBLE EXTRUSION GAP	E max (mm)
150 Bar	0.60
250 Bar	0.60
300 Bar	0.50
400 Bar	0.40
500 Bar	0.30

P60

Double Acting Piston Compact Seal

MAX SPARE LIMITED
QUALITY. PRECISION. SPEED.

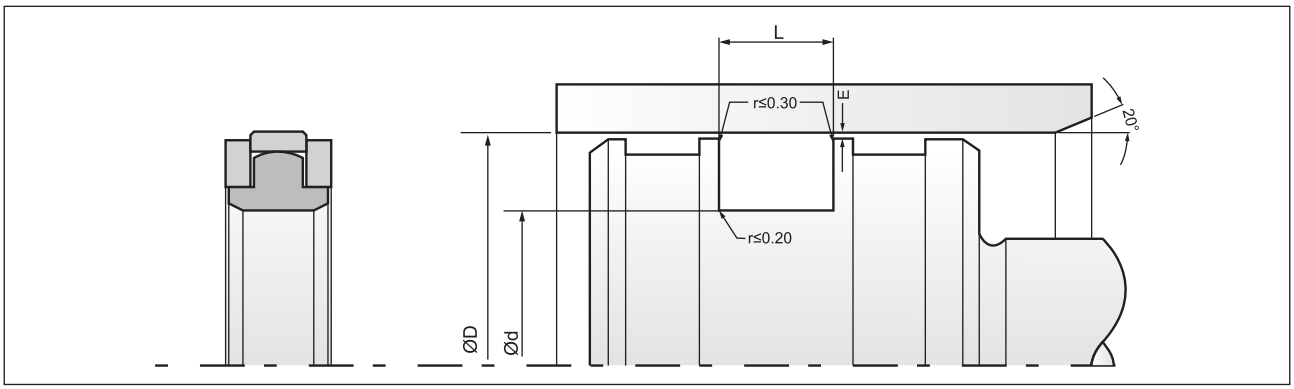

Part No.	D (H9)	d (h9)	L (+0.2)	Material	Mould No.
P60023D501	34.34	23.08	6.65	HNBR	CS-1622
P600306501	40.00	30.00	8.00	FKM	CS-1141
P600340901	44.00	34.00	7.00	NBR	CS-848
P600350901	50.00	35.00	11.00	NBR/BFT	CS-1668
P600360901	50.00	36.00	9.00	NBR	CS-289
P600410901	50.80	41.33	10.00	NBR	CS-2255
P600410902	55.00	41.00	8.50	NBR	CS-2641
P600457001	55.00	45.00	9.80	BFT	CS-871
P600500902	60.00	50.00	7.50	NBR	CS-2317
P600480901	63.00	48.00	7.30	NBR	CS-2318
P600530902	63.00	53.00	7.50	NBR	CS-2316
P600540901	63.50	54.13	10.00	NBR	CS-2256
P600500901	65.00	50.00	11.00	NBR	CS-981
P600600901	69.85	60.38	10.00	NBR	CS-2257
P600530901	70.00	53.00	14.00	NBR	CS-734
P600550905	70.00	55.00	10.00	NBR	CS-1561
P600550903	70.00	55.00	11.00	NBR	CS-889
P600600903	70.00	60.00	8.10	NBR	CS-2462
P600587001	75.00	58.00	14.00	BFT	CS-785
P600620901	76.20	62.03	10.00	NBR	CS-2258
P60064L501	76.20	64.00	14.70	NBR	CS-1713
P60064L502	76.20	64.05	14.70	NBR	CS-2114
P600640901	76.20	64.06	14.00	NBR	CS-2264
P600630902	80.00	63.00	12.50	NBR	CS-2933
P600637001	80.00	63.00	14.00	NBR/BFT	CS-786
P600650911	80.00	65.00	10.50	NBR	CS-2640
P600650901	80.00	65.00	11.00	NBR	CS-780
P600650912	80.00	65.00	11.00	NBR/PU	CS-2693
P600650905	80.00	65.00	12.00	NBR	CS-2315
P600650903	80.00	65.00	12.50	NBR	CS-902
P600650910	80.00	65.00	12.50	NBR	CS-2557
P600660903	80.00	66.00	17.00	NBR	CS-2875
P600660901	81.00	66.00	17.00	NBR	CS-2071
P60075D601	84.97	75.97	13.38	HNBR	CS-1101
P600687001	85.00	68.00	14.00	BFT	CS-787
P600700901	85.00	70.00	10.00	NBR	CS-874
P600700902	85.00	70.00	10.65	NBR	CS-876
P600700903	85.00	70.00	11.00	NBR	CS-982
P60080K101	88.65	80.37	2.54	NYLON	PFB-557
P60080J801	88.65	80.37	3.22	NYLON	PFB-696
P600740901	88.90	74.73	10.00	NBR	CS-2259
P60076L501	88.90	76.70	14.70	NBR	CS-1714
P60076L502	88.90	76.75	14.70	NBR	CS-2112
P600737001	90.00	73.00	14.00	BFT	CS-788
P600750906	90.00	75.00	12.00	NBR	CS-2314
P600750904	90.00	75.00	12.50	NBR	CS-792
P600750905	90.00	75.00	12.50	NBR	CS-799
P600750907	90.00	75.00	12.50	NBR	CS-2464
P60082D601	91.32	82.32	13.38	HNBR	CS-1102
P600787001	95.00	78.00	14.00	BFT	CS-789
P600800902	95.00	80.00	10.50	NBR	CS-875
P600800901	95.00	80.00	11.00	NBR	CS-779

Part No.	D (H9)	d (h9)	L (+0.2)	Material	Mould No.
P600800903	95.00	80.00	12.50	NBR	CS-983
P60086K101	95.00	86.72	2.54	NYLON	PFB-556
P60086J801	95.00	86.72	3.22	NYLON	PFB-697
P600886601	97.45	88.11	13.38	FKM	CS-1665
P600837001	100.00	83.00	14.00	BFT	CS-1125
P600850904	100.00	85.00	12.50	NBR	CS-1008
P600870801	100.00	87.70	14.00	NBR	CS-1671
P600870901	100.00	87.70	14.70	NBR	CS-906
P600861003	101.60	86.60	12.50	NBR	CS-1130
P600870902	101.60	87.43	10.00	NBR	CS-2260
P600880901	101.60	88.90	9.52	NBR	CS-965
P60089L501	101.60	89.40	14.70	NBR	CS-1712
P60089L502	101.60	89.45	14.70	NBR	CS-2113
P600890901	101.60	89.46	14.70	NBR	CS-2754
P600900901	105.00	90.00	12.00	NBR	CS-715
P600900904	105.00	90.00	12.50	NBR	CS-984
P600930901	107.95	93.78	10.00	NBR	CS-2261
P6000950901	110.00	95.00	12.50	NBR	CS-349
P600950904	110.00	95.00	15.00	NBR	CS-2946
P600970901	114.30	97.41	12.00	NBR	CS-2270
P60098P401	114.30	98.55	7.36	NBR	CS-2089
P601000904	114.30	100.13	10.00	NBR	CS-2262
P601021003	114.30	102.15	14.26	NBR	CS-3013
P60102001	114.30	102.15	14.70	NBR	CS-2111
P601020903	114.30	102.16	14.00	NBR	CS-2265
P601000902	115.00	100.00	12.50	NBR	CS-415
P60100903	120.00	100.00	15.50	NBR	CS-1384
P601000906	120.00	100.00	16.00	NBR	CS-2463
P601060901	120.65	106.48	10.00	NBR	CS-2263
P601080901	120.65	108.51	14.00	NBR	CS-2266
P601020902	125.00	102.00	15.00	NBR/BFT	CS-1660
P601020901	125.00	102.00	16.00	NBR	CS-1628
P601050908	125.00	105.00	15.50	NBR	CS-2558
P601100903	125.00	110.00	12.00	NBR	CS-2437
P601120903	125.00	112.70	14.70	NBR	CS-907
P601070903	127.00	107.32	15.50	NBR	CS-2271
P601076501	127.00	107.95	18.60	FKM	CS-1342
P601120901	127.00	112.00	12.50	NBR	CS-651
P601140901	127.00	114.86	14.00	NBR	CS-2267
P601070901	130.00	107.00	16.00	NBR	CS-418
P601150901	130.00	115.00	12.00	NBR	CS-2344
P601210801	133.35	121.16	14.26	NBR	CS-2107
P601120902	135.00	112.00	16.00	NBR	CS-798
P601200901	139.70	120.02	15.50	NBR	CS-2272
P601270903	139.70	127.55	14.00	NBR	CS-2132
P601270904	139.70	127.56	14.00	NBR	CS-2268
P601270905	139.70	127.56	14.70	NBR	CS-2753
P601170901	140.00	117.00	16.00	NBR	CS-416
P601250901	140.00	125.00	12.00	NBR	CS-2343
P601220901	145.00	122.00	16.00	NBR	CS-2947
P601270902	150.00	127.00	16.00	NBR	CS-417
P601300901	150.00	130.00	17.50	NBR	CS-2345

Bold sizes are readily available in stock.
Other materials are available on request.

P60

Double Acting Piston Compact Seal

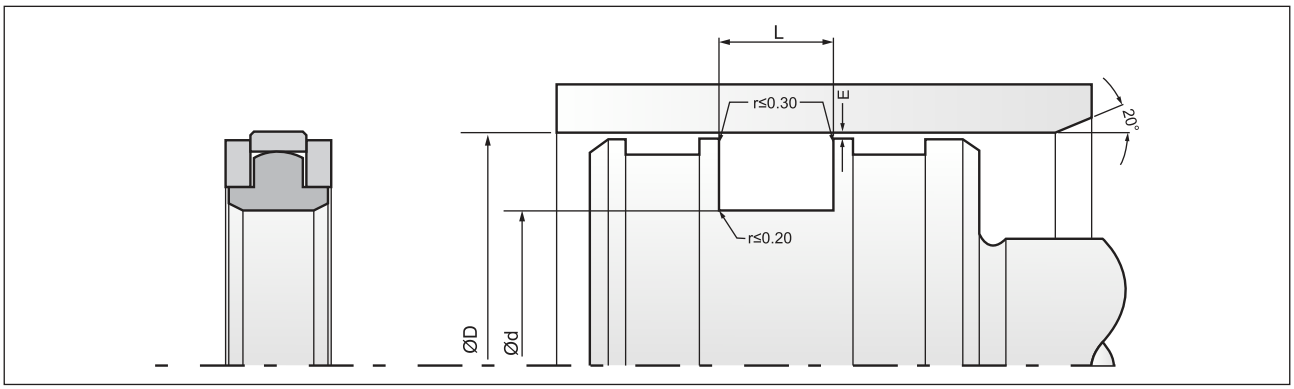

Part No.	D (H9)	d (h9)	L (+0.2)	Material	Mould No.
P601330901	150.00	133.00	20.00	NBR	CS-2874
P601350902	150.00	135.00	12.00	NBR	CS-2331
P601337002	151.00	133.00	20.00	NBR	CS-2226
P601290901	152.40	129.41	15.50	NBR	CS-2273
P601400901	152.40	140.26	14.00	NBR	CS-2269
P601350901	158.75	135.76	15.50	NBR	CS-2274
P601356401	160.00	135.00	15.50	FKM	CS-1624
P601370901	160.00	137.00	16.00	NBR	CS-516
P601400903	160.00	140.00	16.00	NBR	CS-2465
P601450903	160.00	145.00	12.00	NBR	CS-2335
P601450902	160.00	145.00	18.00	NBR	CS-602
P601450904	165.00	145.00	16.50	NBR	CS-2342
P601450901	165.00	145.00	16.70	NBR	CS-541
P601420901	165.10	142.11	15.50	NBR	CS-2275
P601457001	166.00	145.00	20.00	BFT	CS-1634
P601470901	170.00	147.00	16.00	NBR	CS-985
P601470902	170.00	147.00	16.00	NBR	CS-2948
P601550902	170.00	155.00	12.00	NBR	CS-2339
P601550903	170.00	155.00	15.50	NBR	CS-2334
P601550901	170.00	155.00	16.00	NBR	CS-547
P601550801	170.00	155.00	14/18	NBR	CS-606
P601540901	177.80	154.81	15.50	NBR	CS-2276
P601570903	180.00	157.00	16.00	NBR	CS-517
P601600901	180.00	160.00	17.50	NBR	CS-2340
P601650901	180.00	165.00	12.00	NBR	CS-2336
P601610901	184.15	161.16	15.50	NBR	CS-2277
P601620902	185.00	162.00	16.00	NBR	CS-986
P601670901	190.00	167.00	16.00	NBR	CS-987
P601750901	190.00	175.00	12.00	NBR	CS-2337
P601750902	190.00	175.00	18.10	NBR	CS-2642

Part No.	D (H9)	d (h9)	L (+0.2)	Material	Mould No.
P601750801	190.00	175.00	14/18.10	NBR	CS-608
P601670902	190.50	167.51	15.50	NBR	CS-2278
P601701001	200.00	170.00	21.50	NBR	CS-1834
P60175L501	200.00	175.00	28.00	PU	CS-540
P601770901	200.00	177.00	16.00	NBR	CS-346
P601776502	200.00	177.00	16.00	FKM/BFT	CS-1659
P601800801	200.00	180.00	15.50	NBR	CS-1513
P601800902	200.00	180.00	15.50	NBR	CS-2338
P601830901	203.20	183.21	16.00	NBR	CS-1228
P601841001	203.20	184.65	18.50	NBR	CS-1970
P601870901	210.00	187.00	16.00	NBR	CS-988
P602000901	220.00	200.00	15.50	NBR	CS-2341
P602020901	225.00	202.00	16.00	NBR	CS-989
P602070901	230.00	207.00	16.00	NBR	CS-990
P602100902	230.00	210.00	15.50	NBR	CS-2332
P602100901	230.00	210.00	16.00	NBR	CS-607
P602170901	240.00	217.00	16.00	NBR	CS-991
P602220902	250.00	222.00	17.50	NBR	CS-276
P602250901	250.00	225.00	25.00	NBR	CS-357
P602300902	250.00	230.00	15.50	NBR	CS-2333
P602300801	250.00	230.00	16/22	NBR	CS-1099
P602326401	260.00	232.00	17.00	FKM/BFT	CS-2218
P602320901	260.00	232.00	17.50	NBR	CS-992
P602400801	260.00	240.00	16/22	NBR	CS-605
P602420901	270.00	242.00	17.50	NBR	CS-993
P602506401	280.00	250.00	15.30	FKM	CS-1623
P602520901	280.00	252.00	17.50	NBR	CS-994
P602551101	280.00	255.00	18.30	NBR/BFT	CS-1796
P602920901	320.00	292.00	17.50	NBR	CS-995

Bold sizes are readily available in stock.
Other materials are available on request.

P65

Double Acting Piston Compact Seal

DETAILS

P65 is a double acting compact piston seal intended for use where housing space is at a premium and in semi severe application. It comprises of one fabric reinforced sealing ring and two thermoplastic bearing rings.

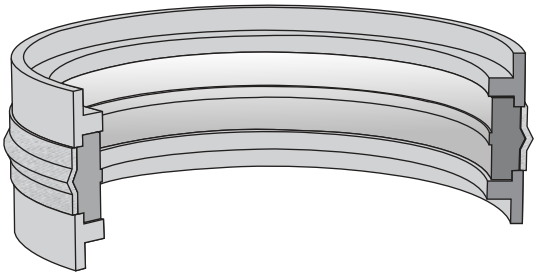

COMPATIBILITY

Mineral oils, bio oils, water soluble & water glycol fluids.

MATERIAL

Sealing Ring : Nitrile Rubber / Fabric 75/80 Shore A
Bearing rings : POM / Nylon

APPLICATION

Earth moving equipment, agricultural machinery, cranes, standard cylinders, mining, presses, steel mill equipments.

OPERATING CONDITIONS

Temperature Range : -20°C to + 100°C
Pressure : 350 Bar
Speed : 0.5 m/s

FEATURES

- High pressure capability.
- Wide Guiding, to take maximum load.
- Easy to assembled.

SURFACE ROUGHNESS

Static : 1.6 µmRa
Dynamic : 0.4 µmRa

INSTALLATION & ASSEMBLY

The P65 profile has been designed for installation in closed grooves. Careful fitting is a prerequisite for the correct functioning of the seal. The installation groove must be carefully deburred and cleaned.

P65

Double Acting Piston Compact Seal

MAX SPARE LIMITED
QUALITY. PRECISION. SPEED.

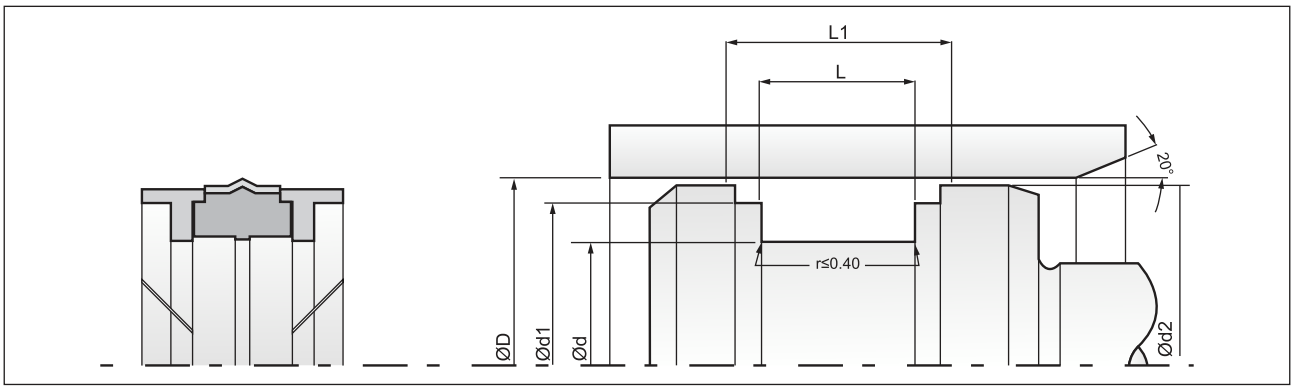

Part No.	D (H11)	d (h9)	L (+0.2)	L1 (+0.2)	d1 (h9)	d2 (±0.1)	Material	Mould No.
P650178301	25.00	17.00	10.00	18.00	22.00	24.00	NBR/FABRIC	CS-1096
P650248302	32.00	24.00	10.00	18.00	29.00	31.40	NBR/FABRIC	CS-2688
P650248301	32.00	24.00	15.50	21.90	29.00	31.40	NBR/FABRIC	CS-2687
P650278301	35.00	27.00	15.50	21.90	31.00	34.00	NBR/FABRIC	CS-1095
P650328302	40.00	32.00	10.00	18.00	36.00	39.40	NBR/FABRIC	CS-575
P650328303	40.00	32.00	15.50	21.90	36.00	39.40	NBR/FABRIC	CS-942
P650328301	40.00	32.00	15.50	21.90	36.00	39.00	NBR/FABRIC	CS-578
P650378301	45.00	37.00	15.50	21.90	41.00	44.40	NBR/FABRIC	CS-2686
P650388301	50.00	38.00	20.50	28.90	46.00	49.00	NBR/FABRIC	CS-970
P650380901	50.00	38.00	20.50	28.90	46.00	49.40	NBR/FABRIC	CS-703
P650408301	50.00	40.00	12.50	20.50	47.00	49.00	NBR/FABRIC	CS-579
P650430901	55.00	43.00	20.50	28.90	51.00	54.00	NBR/FABRIC	CS-705
P650438301	55.00	43.00	20.50	28.90	51.00	54.40	NBR/FABRIC	CS-1073
P650438302	55.00	43.00	20.50	28.90	51.00	54.40	NBR/FABRIC	CS-2685
P650488303	60.00	48.00	20.50	28.90	56.00	59.40	NBR/FABRIC	CS-943
P650488305	60.00	48.00	20.50	28.90	56.00	59.40	NBR/FABRIC	CS-2697
P650488303	60.00	48.00	20.50	28.90	56.00	59.40	NBR/FABRIC	CS-971
P650488302	60.00	48.00	20.50	28.90	56.00	59.40	NBR/FABRIC	CS-580
P650501001	60.32	58.80	11.10	18.72	56.00	59.72	NBR/FABRIC	CS-2861
P650468401	63.00	46.00	14.50	29.00	59.00	62.40	NBR/FABRIC	CS-2921
P650510901	63.00	51.00	20.50	28.90	59.00	62.40	NBR/FABRIC	CS-702
P650518301	63.00	51.00	20.50	28.90	59.00	62.40	NBR/FABRIC	CS-1075
P650518302	63.00	51.00	20.50	28.90	59.00	62.40	NBR/FABRIC	CS-2684
P650538301	63.00	53.00	12.50	20.50	60.00	62.00	NBR/FABRIC	CS-581
P650530901	63.00	53.00	12.50	20.50	60.00	62.00	NBR/FABRIC	CS-677
P650538302	65.00	53.00	20.50	28.90	61.00	64.40	NBR/FABRIC	CS-1076
P650530903	65.00	53.00	20.50	28.90	61.00	64.40	NBR/FABRIC	CS-1011
P650588302	70.00	58.00	20.50	28.90	66.00	69.40	NBR/FABRIC	CS-972
P650588303	70.00	58.00	20.50	28.90	66.00	69.40	NBR/FABRIC	CS-582
P650638301	75.00	63.00	20.50	28.90	71.00	74.40	NBR/FABRIC	CS-583
P650630901	75.00	63.00	20.50	28.90	71.00	74.40	NBR/FABRIC	CS-679
P650638401	80.00	63.00	14.50	29.00	76.00	79.40	NBR/FABRIC	CS-2922
P650658301	80.00	65.00	20.00	30.00	76.00	79.40	NBR/FABRIC	CS-584
P650660901	80.00	66.00	22.50	32.90	76.00	79.40	NBR/FABRIC	CS-664
P650668302	80.00	66.00	22.50	32.90	76.00	79.40	NBR/FABRIC	CS-973
P650718302	85.00	71.00	22.50	32.90	81.00	84.40	NBR/FABRIC	CS-1072
P650718301	85.00	71.00	22.50	32.90	81.00	84.40	NBR/FABRIC	CS-2683
P650710901	85.00	71.00	22.50	32.90	81.00	84.40	NBR/FABRIC	CS-680
P650768302	90.00	76.00	22.50	32.90	86.00	89.40	NBR/FABRIC	CS-665
P650768301	90.00	76.00	22.50	32.90	86.00	89.40	NBR/FABRIC	CS-1074
P650800901	100.00	80.00	31.75	44.87	96.00	99.40	NBR/FABRIC	CS-1945
P650858301	100.00	85.00	20.00	30.00	96.00	99.40	NBR/FABRIC	CS-1344
P650868302	100.00	86.00	22.50	32.90	96.00	99.40	NBR/FABRIC	CS-944
P650868301	100.00	86.00	22.50	32.90	96.00	99.40	NBR/FABRIC	CS-586
P650860901	100.00	86.00	22.50	32.90	96.00	99.40	NBR/FABRIC	CS-681
P650968302	110.00	96.00	22.50	33.00	106.00	109.40	NBR/FABRIC	CS-2076
P650960901	110.00	96.00	22.50	32.90	106.00	109.40	NBR/FABRIC	CS-682
P650968301	110.00	96.00	22.50	32.90	106.00	109.40	NBR/FABRIC	CS-587
P651068302	120.00	106.00	22.40	33.00	116.00	119.40	NBR/FABRIC	CS-588
P651060901	120.00	106.00	22.50	32.90	116.00	119.40	NBR/FABRIC	CS-666
P651068301	120.00	106.00	22.50	32.90	116.00	119.40	NBR/FABRIC	CS-2682
P651050901	125.00	105.00	25.00	37.60	121.00	124.40	NBR/FABRIC	CS-667

Bold sizes are readily available in stock.
Other materials are available on request.

P65

Double Acting Piston Compact Seal

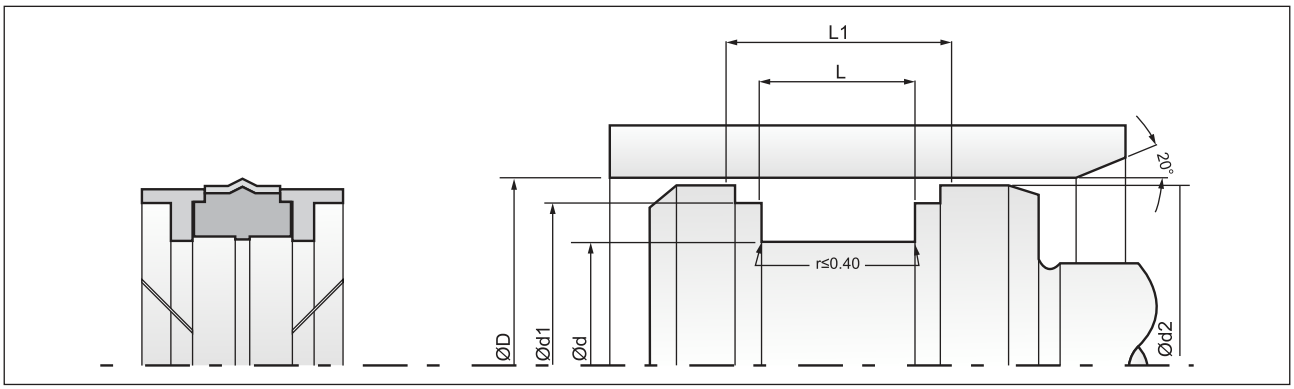

Part No.	D (H11)	d (h9)	L (+0.2)	L1 (+0.2)	d1 (h9)	d2 (±0.1)	Material	Mould No.
P651088301	125.00	108.00	26.50	40.90	121.00	124.40	NBR/FABRIC	CS-668
P651200901	140.00	120.00	25.00	37.60	136.00	139.40	NBR/FABRIC	CS-669
P651238301	140.00	123.00	26.50	44.00	136.00	139.40	NBR/FABRIC	CS-835
P651330901	150.00	133.00	26.50	40.90	146.00	149.40	NBR/FABRIC	CS-670
P651400901	160.00	140.00	25.00	37.60	156.00	159.40	NBR/FABRIC	CS-671
P651430901	160.00	143.00	26.50	40.90	156.00	159.40	NBR/FABRIC	CS-672
P651638301	180.00	163.00	26.50	40.90	176.00	179.40	NBR/FABRIC	CS-673
P651700901	200.00	170.00	36.00	61.00	196.00	199.40	NBR/FABRIC	CS-674
P651800901	200.00	180.00	31.50	49.90	196.00	199.40	NBR/FABRIC	CS-675
P652000901	220.00	200.00	31.50	49.90	216.00	219.40	NBR/FABRIC	CS-676
P652300901	250.00	230.00	31.50	49.90	246.00	249.40	NBR/FABRIC	CS-657

Bold sizes are readily available in stock.
Other materials are available on request.

P69

Double Acting Piston Compact Seal

DETAILS

P69 is a robust heavy-duty double-acting piston seal assembly for split pistons. It has been designed to meet the high pressures subject to severe load and vibration conditions. It comprises of a nitrile sealing element with two endless fabric reinforced nitrile support rings, these rings energizes when the pressure is applied. The two endless thermoplastic bear rings function as anti-extrusion rings. This seal has a pressure rating of 700 bar. Seal sets with split backup rings and bearing rings are available on request.

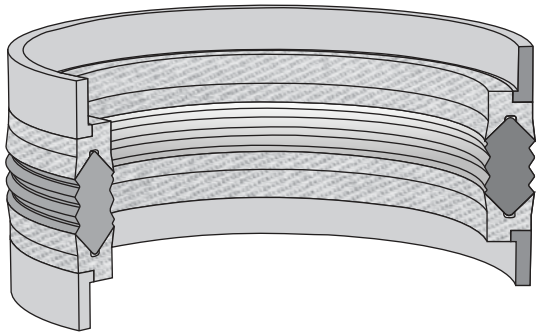

COMPATIBILITY

Hydraulic oils based on mineral oil and PAO fluids.

MATERIAL

Sealing Ring : Nitrile Rubber 75/80 Shore A
Backup Ring : Nitrile Rubber / fabric 75/80 Shore A
Bearing rings : POM / Nylon

APPLICATION

- Heavy duty cylinders.
- Agricultural Machines.
- Industrial Trucks.
- Excavators, cranes, marine hydraulics.

OPERATING CONDITIONS

Temperature Range : -20°C to + 100°C
Pressure : 700 Bar
Speed : 0.5 m/s

FEATURES

- High static and dynamic sealing application.
- Low friction.
- Well proven design.
- Tolerant to contamination.
- Effective sealing while vibration and shock loading.

SURFACE ROUGHNESS

Static : 1.6 µmRa
Dynamic : 0.4 µmRa

INSTALLATION & ASSEMBLY

P69 piston seal has been designed for the installation in the open grooves because of its endless backup ring. It is necessary to have a closed groove, the back up rings should be in split type and installed afterwards. It is very important that the assembly tool must be of soft material and have no sharp edges. Also, the seal must lubricate before installation.

P69

Double Acting Piston Compact Seal

MAX SPARE LIMITED
QUALITY. PRECISION. SPEED.

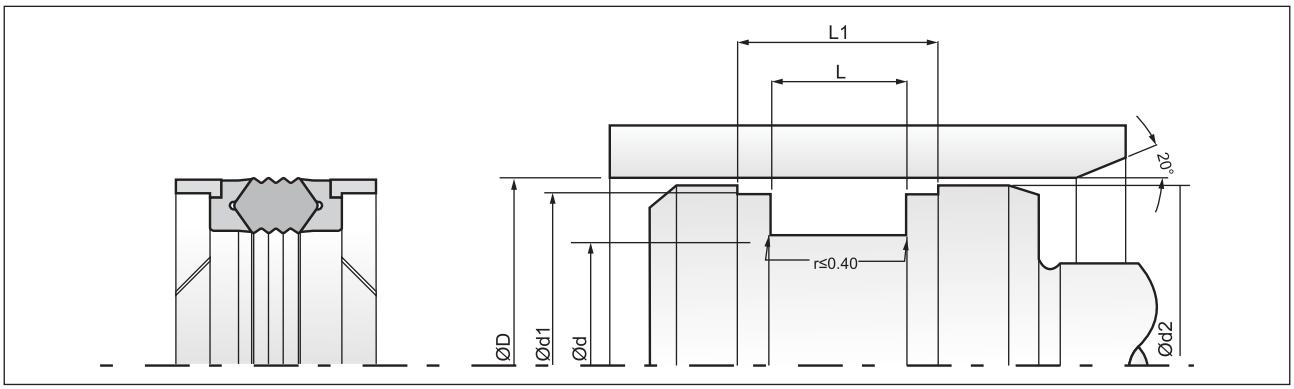

Part No.	D (H11)	d (h9)	L (+0.2)	L1 (+0.2)	d1 (h9)	d2 (±0.1)	Material	Mould No.
P690341001	50.00	34.00	32.00	44.70	43.77	47.85	NBR/FABRIC	CS-2153
P690441002	60.00	44.00	32.00	44.70	43.77	47.85	NBR/FABRIC	CS-2182
P690471003	63.50	47.62	31.75	44.45	57.25	61.32	NBR/FABRIC	CS-656
P690491001	65.00	49.00	32.00	44.70	58.70	62.80	NBR/FABRIC	CS-658
P690501001	70.00	50.00	35.00	54.04	62.62	67.54	NBR/FABRIC	SUC-873
P690551002	75.00	55.00	35.00	54.04	67.70	72.54	NBR/FABRIC	CS-1239
P690601001	80.00	60.00	35.00	54.04	72.62	77.52	NBR/FABRIC	CS-659
P690641001	80.00	64.00	32.00	51.04	72.62	77.52	NBR/FABRIC	CS-648
P690741001	90.00	74.00	32.00	51.04	82.87	87.79	NBR/FABRIC	CS-2152
P690801004	100.00	80.00	24.40	36.40	95.00	97.50	NBR/FABRIC	CS-1931
P690801003	100.00	80.00	35.00	54.04	92.60	97.50	NBR/FABRIC	CS-1729
P690821001	101.60	82.55	34.92	53.96	94.20	99.10	NBR/FABRIC	CS-600
P691001005	125.00	100.00	45.00	70.40	116.80	122.30	NBR/FABRIC	CS-177
P691141001	139.70	114.30	44.45	69.85	131.47	137.03	NBR/FABRIC	CS-660
P691201004	150.00	120.00	45.00	65.00	142.90	147.50	NBR/FABRIC	CS-2466
P691271001	152.40	127.00	44.45	69.85	144.15	149.70	NBR/FABRIC	CS-661
P691351005	160.00	135.00	45.00	70.40	151.72	157.10	NBR/FABRIC	CS-2554
P691361001	150.00	136.00	25.00	47.00	146.00	147.50	NBR/FABRIC	CS-1012
P691401002	170.00	140.00	45.00	70.40	163.00	167.87	NBR/FABRIC	CS-2876
P691521001	177.80	152.40	44.45	69.85	169.55	175.11	NBR/FABRIC	CS-662
P691551004	180.00	155.00	45.00	70.40	171.60	177.10	NBR/FABRIC	CS-1584
P691551006	180.00	155.00	45.00	70.40	171.60	177.10	NBR/FABRIC	CS-2467
P691751002	200.00	175.00	45.00	70.40	191.72	197.10	NBR/FABRIC	CS-1630
P691851001	210.00	185.00	45.00	70.40	201.60	207.10	NBR/FABRIC	CS-645
P691951004	220.00	195.00	45.00	70.40	211.60	217.10	NBR/FABRIC	CS-503
P692051001	230.00	205.00	45.00	70.40	221.72	227.10	NBR/FABRIC	CS-644
P692151001	240.00	215.00	45.00	70.40	231.72	237.10	NBR/FABRIC	CS-599
P692251001	250.00	225.00	45.00	70.40	241.72	247.10	NBR/FABRIC	CS-643
P692351001	260.00	235.00	45.00	70.40	251.72	257.10	NBR/FABRIC	CS-598
P692451001	270.00	245.00	45.00	70.40	261.72	267.10	NBR/FABRIC	CS-2151
P692551001	280.00	255.00	45.00	70.40	271.72	277.10	NBR/FABRIC	CS-642
P692751001	300.00	275.00	45.00	70.40	291.72	297.10	NBR/FABRIC	CS-641
P693351001	360.00	335.00	44.50	69.90	351.76	257.33	NBR/FABRIC	CS-663
P693401001	370.00	340.00	45.00	70.40	356.72	367.10	NBR/FABRIC	CS-727

Bold sizes are readily available in stock.
Other materials are available on request.

P72

Double Acting Piston Compact Seal

DETAILS

P72 is a double acting compact piston seal for high pressure hydraulic application. It comprises of one fabric reinforced sealing ring and two thermoplastic bearing rings.

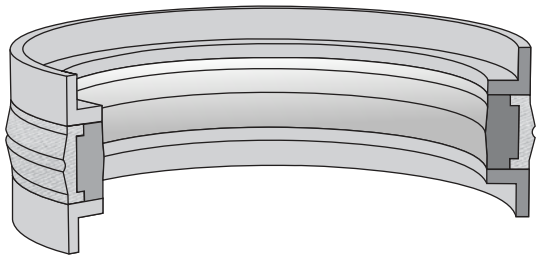

COMPATIBILITY

Mineral oils, bio oils, water soluble & water glycol fluids.

MATERIAL

Sealing Ring : Nitrile Rubber / Fabric 75/80 Shore A
Bearing rings : POM / Nylon

APPLICATION

Earth moving equipment, agricultural machinery, cranes, standard cylinders, mining, presses, steel mill equipment.

OPERATING CONDITIONS

Temperature Range : -20°C to + 100°C
Pressure : 400 Bar
Speed : 0.5 m/s

FEATURES

- High pressure capability.
- Wide Guiding, to take maximum load.
- Easy to assemble.

SURFACE ROUGHNESS

Static : 1.6 µmRa
Dynamic : 0.4 µmRa

INSTALLATION & ASSEMBLY

The P72 profile has been designed for installation in closed grooves. Careful fitting is a prerequisite for the correct functioning of the seal. The installation groove must be carefully deburred and cleaned.

P72

Double Acting Piston Compact Seal

MAX SPARE LIMITED
QUALITY. PRECISION. SPEED.

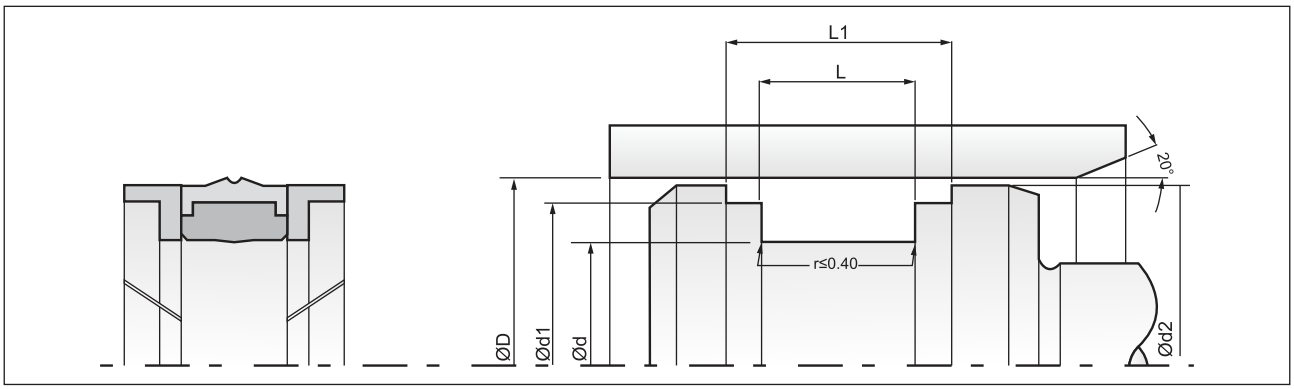

Part No.	D (H11)	d (h9)	L (+0.2)	L1 (+0.2)	d1 (h9)	d2 (±0.1)	Material	Mould No.
P720218301	30.00	21.00	13.50	19.90	27.00	29.40	NBR/FABRIC	CS-2666
P720228301	30.00	22.00	13.50	19.90	26.00	29.40	NBR/FABRIC	CS-2665
P720248304	32.00	24.00	10.00	18.00	28.00	31.40	NBR/FABRIC	CS-1523
P720248305	32.00	24.00	15.50	21.90	28.00	31.40	NBR/FABRIC	CS-2664
P720248303	32.00	24.00	15.50	21.90	28.00	31.40	NBR/FABRIC	CS-844
P720278302	35.00	27.00	15.50	21.90	31.00	34.40	NBR/FABRIC	CS-2903
P721029301	40.00	29.00	15.50	21.90	36.00	39.40	NBR/FABRIC	CS-2857
P720328308	40.00	32.00	6.10	13.50	37.00	39.40	NBR/FABRIC	CS-2567
P720328307	40.00	32.00	10.00	18.00	37.00	39.40	NBR/FABRIC	CS-1522
P720328309	40.00	32.00	15.50	21.90	36.00	39.40	NBR/FABRIC	CS-2663
P720328305	40.00	32.00	15.50	21.90	36.00	39.40	NBR/FABRIC	CS-802
P720378304	45.00	37.00	15.50	21.90	41.00	44.40	NBR/FABRIC	CS-2668
P720378303	45.00	37.00	15.50	21.90	41.00	44.40	NBR/FABRIC	CS-1640
P720388306	50.00	38.00	20.50	28.90	46.00	49.40	NBR/FABRIC	CS-2608
P720388305	50.00	38.00	20.50	28.90	46.00	49.40	NBR/FABRIC	CS-945
P720388304	50.00	38.00	20.50	28.90	46.00	49.40	NBR/FABRIC	CS-769
P720408302	50.00	40.00	12.50	20.90	46.00	49.40	NBR/FABRIC	CS-271
P720438302	55.00	43.00	20.50	28.90	51.00	54.40	NBR/FABRIC	CS-1077
P720488305	60.00	48.00	20.50	28.90	56.00	59.40	NBR/FABRIC	CS-2607
P720488301	60.00	48.00	20.50	28.90	56.00	59.40	NBR/FABRIC	CS-351
P720488302	63.00	48.00	24.30	5.85	59.00	62.40	NBR/FABRIC	CS-916
P720518304	63.00	51.00	20.50	28.90	59.00	62.40	NBR/FABRIC	CS-1079
P720518305	63.00	51.00	20.50	28.90	59.00	62.40	NBR/FABRIC	CS-2015
P720518303	63.00	51.00	20.50	28.90	59.00	62.40	NBR/FABRIC	CS-913
P720538303	65.00	53.00	20.50	28.90	61.00	64.40	NBR/FABRIC	CS-1078
P720538302	65.00	53.00	20.50	28.90	61.00	64.40	NBR/FABRIC	CS-893
P720538304	65.00	53.00	20.50	28.90	61.00	64.40	NBR/FABRIC	CS-2014
P720538301	65.00	53.00	20.50	28.90	61.00	64.40	NBR/FABRIC	CS-460
P720588301	70.00	58.00	20.50	28.90	66.00	69.40	NBR/FABRIC	CS-352
P720588302	70.00	58.00	20.50	28.90	66.00	69.40	NBR/FABRIC	CS-946
P720588303	70.00	58.00	20.50	28.90	66.00	69.40	NBR/FABRIC	CS-2013
P720638305	75.00	63.00	20.50	28.90	71.00	74.40	NBR/FABRIC	CS-2016
P720638304	75.00	63.00	20.50	28.90	71.00	74.40	NBR/FABRIC	CS-462
P720658301	80.00	65.00	20.00	30.00	76.00	79.40	NBR/FABRIC	CS-2009
P720668309	80.00	66.00	22.50	32.90	76.00	79.40	NBR/FABRIC	CS-1163
P720668305	80.00	66.00	22.50	32.90	76.00	79.40	NBR/FABRIC	CS-947
P7200668308	80.00	66.00	22.50	32.90	76.00	79.40	NBR/FABRIC	CS-1868
P720668303	80.00	66.00	22.50	32.90	76.00	79.40	NBR/FABRIC	CS-470
P720718301	85.00	71.00	22.50	32.90	81.00	84.40	NBR/FABRIC	CS-1080
P720718302	85.00	71.00	22.50	32.90	81.00	84.40	NBR/FABRIC	CS-1282
P720718303	85.00	71.00	22.50	32.90	81.00	84.40	NBR/FABRIC	CS-2017
P720768301	90.00	76.00	22.50	32.90	86.00	89.40	NBR/FABRIC	CS-1081
P720768303	90.00	76.00	22.50	32.90	86.00	89.40	NBR/FABRIC	CS-849
P720768305	90.00	76.00	22.50	32.90	86.00	89.40	NBR/FABRIC	CS-2606
P720868308	100.00	86.00	22.50	32.90	96.00	99.40	NBR/FABRIC	CS-1164
P720868304	100.00	86.00	22.50	32.90	96.00	99.40	NBR/FABRIC	CS-974
P720868309	100.00	86.00	22.50	32.90	96.00	99.40	NBR/FABRIC	CS-2667
P720908301	110.00	90.00	31.00	45.00	104.00	109.40	NBR/FABRIC	CS-1224
P720968302	110.00	96.00	20.50	30.90	106.00	109.40	NBR/FABRIC	CS-1547
P720968303	110.00	96.00	22.50	32.90	106.00	109.40	NBR/FABRIC	CS-2081
P720968305	110.00	96.00	22.50	32.90	106.00	109.40	NBR/FABRIC	CS-2605
P721068303	120.00	106.00	22.50	32.90	116.00	119.40	NBR/FABRIC	CS-2604

Bold sizes are readily available in stock.
Other materials are available on request.

P72

Double Acting Piston Compact Seal

MAX SPARE LIMITED
QUALITY. PRECISION. SPEED.

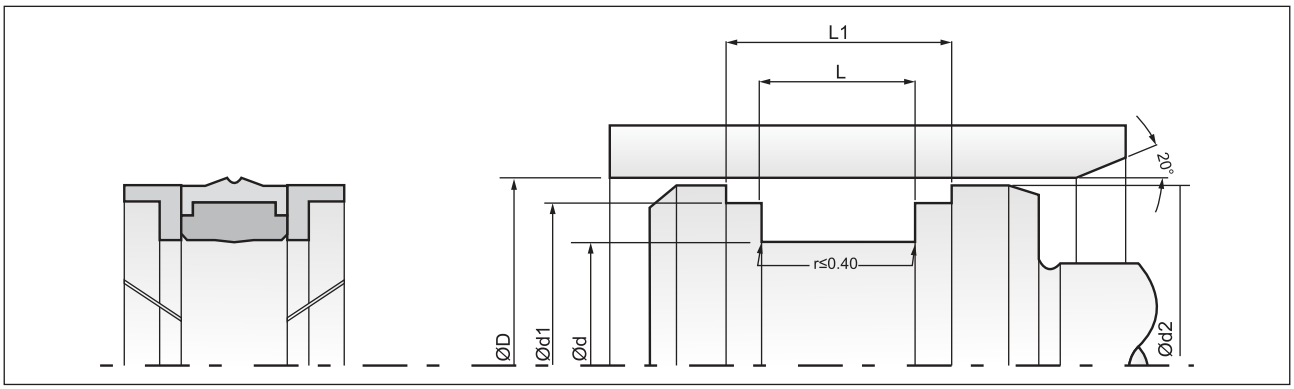

Part No.	D (H11)	d (h9)	L (+0.2)	L1 (+0.2)	d1 (h9)	d2 (±0.1)	Material	Mould No.
P721008301	125.00	100.00	38.80	57.20	119.00	124.40	NBR/FABRIC	CS-919
P721038301	125.00	103.00	26.50	36.90	121.00	124.40	NBR/FABRIC	CS-2010
P721088303	125.00	108.00	26.50	40.90	121.00	124.40	NBR/FABRIC	CS-2011
P721138301	130.00	113.00	26.50	48.90	126.00	129.40	NBR/FABRIC	CS-1776
P721238301	140.00	123.00	26.50	40.90	136.00	139.40	NBR/FABRIC	SUF-369
P721238305	140.00	123.00	26.00	40.50	136.00	139.40	NBR/FABRIC	CS-1520
P721238307	140.00	123.00	26.50	40.90	136.00	139.40	NBR/FABRIC	CS-2012
P721338302	150.00	133.00	26.50	40.90	146.00	149.40	NBR/FABRIC	CS-1324
P721338304	150.00	133.00	26.50	40.90	146.00	149.40	NBR/FABRIC	CS-2008
P721358301	160.00	135.00	31.00	44.00	156.00	159.40	NBR/FABRIC	CS-915
P721408301	160.00	140.00	25.00	37.60	156.00	159.40	NBR/FABRIC	CS-2018
P721428301	160.00	142.00	26.50	40.90	156.00	159.40	NBR/FABRIC	CS-2250
P721438306	160.00	143.00	26.50	40.90	156.00	159.40	NBR/FABRIC	SUG-318
P721438304	160.00	143.00	26.50	40.90	156.00	159.40	NBR/FABRIC	CS-1867
P721638303	180.00	163.00	26.50	40.90	176.00	179.40	NBR/FABRIC	CS-1866
P721638301	180.00	163.00	26.50	40.90	176.00	179.40	NBR/FABRIC	CS-790
P721701001	200.00	170.00	44.50	68.00	194.00	199.40	NBR/FABRIC	CS-959
P721808301	200.00	180.00	31.50	49.90	196.00	199.40	NBR/FABRIC	CS-1869
P721851001	210.00	185.00	32.00	42.00	206.00	209.40	NBR/FABRIC	CS-1087
P722008302	220.00	200.00	31.50	49.90	216.00	219.40	NBR/FABRIC	CS-440
P722008303	220.00	200.00	31.50	49.90	215.00	219.40	NBR/FABRIC	CS-2734
P722008402	225.00	200.00	31.40	44.90	220.00	224.40	NBR/FABRIC	CS-1669
P722008401	226.00	200.00	31.40	44.90	221.00	225.40	NBR/FABRIC	CS-1651
P722258301	250.00	225.00	31.50	44.70	246.00	249.40	NBR/FABRIC	CS-2733
P722308303	250.00	230.00	25.00	49.90	246.00	249.40	NBR/FABRIC	CS-2219
P722308302	250.00	230.00	31.50	49.90	246.00	249.40	NBR/FABRIC	CS-591
P722508401	275.00	250.00	31.00	44.00	271.00	274.40	NBR/FABRIC	CS-1347
P722758301	300.00	275.00	31.50	49.90	296.00	299.40	NBR/FABRIC	CS-845

Bold sizes are readily available in stock.
Other materials are available on request.

P76

Double Acting Piston Compact Seal

DETAILS

P76 is a robust heavy duty double acting piston seal. P76 seal consists of 6 parts, elastomeric energiser ring, Bronze Filled PTFE sealing ring, two backup rings made of Thermoplastic polymers and two bearing rings. The elastomeric ring energises the sealing ring to force it against cylinder bore, providing a sealing function at low pressure. The two backup rings prevent gap extrusion of the sealing ring at high pressures. Two bearing rings make contact with cylinder bore which guide the piston during heavy load condition.

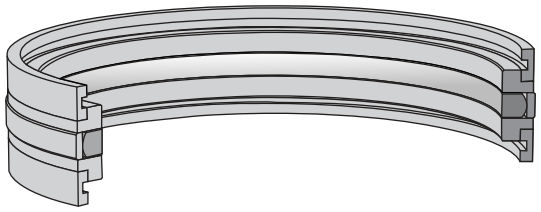

COMPATIBILITY

Mineral oils, bio oils, water soluble & water glycol fluids.

MATERIAL

Sealing Ring : Bronze filled PTFE
Energizer ring : NBR
Back-up Rings : Thermoplastic polymer
Bearing Rings : Phenolic Resin Fabric / POM / Nylon

APPLICATION

- Construction machine cylinders.
- Stick slip free operation.
- Big diameters & long stroke cylinders.

OPERATING CONDITIONS

Temperature Range : -30°C to + 100°C
Pressure : 400 Bar
Speed : 1.0 m/s

FEATURES

- High pressure capability.
- Wide bearing ring, to take maximum load.
- Easy to assemble.

SURFACE ROUGHNESS

Static : 0.8 µmRa
Dynamic : 0.4 µmRa

INSTALLATION & ASSEMBLY

The P76 profile has been designed for installation in closed grooves. Careful fitting is a prerequisite for the correct functioning of the seal. The installation groove must be carefully deburred and cleaned.

P76

Double Acting Piston Compact Seal

MAX SPARE LIMITED
QUALITY. PRECISION. SPEED.

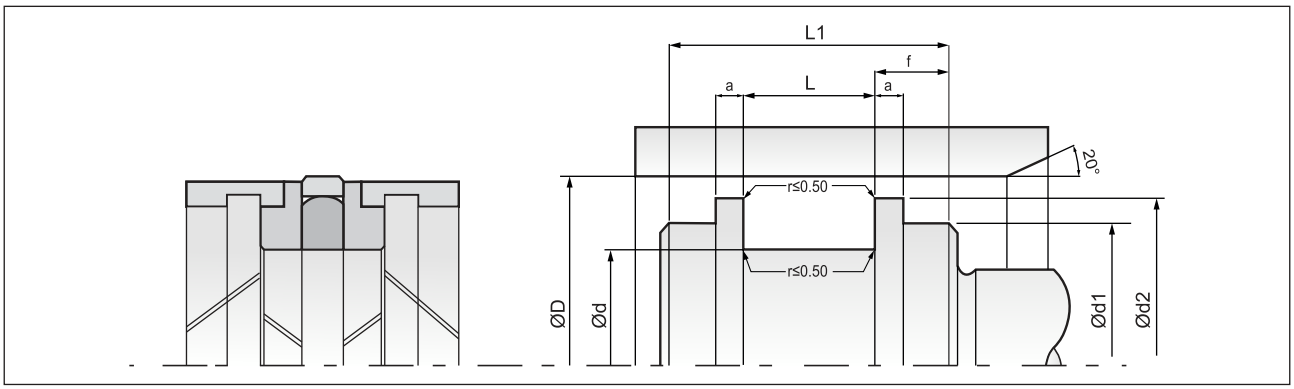

Part No.	D (H8)	d (h9)	L1 (+0.2)	d1 (f8)	d2 (f8)	a	L (+0.2)	f (+0.1)	Material	Mould No.
P760340903	50.00	34.00	32.00	42.00	46.00	3.00	20.50	5.80	NBR	CS-1460
P760346501	50.00	34.00	39.00	42.00	46.00	3.00	20.50	9.25	FKM	CS-2568
P760476501	63.00	47.00	39.00	55.00	59.00	3.00	20.50	9.25	FKM	CS-2570
P760470901	**63.00**	**47.00**	**39.00**	**55.00**	**59.00**	**3.00**	**20.50**	**9.25**	**NBR**	**CS-1106**
P760540901	70.00	54.00	39.00	62.00	66.00	3.00	20.50	9.25	NBR	CS-604
P760620902	80.00	62.00	36.00	72.00	76.00	3.00	22.50	6.80	NBR	CS-1068
P760620901	**80.00**	**62.00**	**43.00**	**72.00**	**76.00**	**3.00**	**22.50**	**10.25**	**NBR**	**CS-1025**
P760620903	80.00	62.00	43.00	72.00	76.00	3.00	22.50	10.25	NBR	CS-1121
P760626503	80.00	62.00	43.00	72.00	76.00	3.00	22.50	10.25	FKM	CS-1142
P760670901	85.00	67.00	43.00	77.00	81.00	3.00	22.50	10.25	NBR	CS-1026
P760720902	90.00	72.00	36.00	82.00	86.00	3.00	22.50	10.25	NBR	CS-1463
P760820901	**100.00**	**82.00**	**43.00**	**92.00**	**96.00**	**3.00**	**22.50**	**10.25**	**NBR**	**CS-1109**
P760821003	100.00	82.00	43.00	92.00	96.00	3.00	22.50	10.25	NBR	CS-545
P760826501	100.00	82.00	43.00	92.00	96.00	3.00	22.50	10.25	FKM	CS-1569
P760921001	110.00	92.00	43.00	102.00	106.00	3.00	22.50	10.25	NBR	CS-692
P760970901	115.00	97.00	43.00	107.00	111.00	3.00	22.50	10.25	NBR	CS-887
P761020901	120.00	102.00	43.00	112.00	116.00	3.00	22.50	10.25	NBR	CS-1027
P761030901	**125.00**	**103.00**	**53.00**	**115.00**	**121.00**	**4.00**	**26.50**	**13.25**	**NBR**	**CS-909**
P761036601	125.00	103.00	53.00	115.00	121.00	4.00	26.50	13.25	FKM	CS-363
P761080901	**130.00**	**108.00**	**53.00**	**120.00**	**126.00**	**4.00**	**26.50**	**13.25**	**NBR**	**CS-1028**
P761180902	**140.00**	**118.00**	**53.00**	**130.00**	**136.00**	**4.00**	**26.50**	**13.25**	**NBR**	**CS-1108**
P761186601	140.00	118.00	53.00	130.00	136.00	4.00	26.50	13.25	FKM	CS-819
P761280901	150.00	128.00	53.00	140.00	146.00	4.00	26.50	13.25	NBR	CS-1461
P761380901	**160.00**	**138.00**	**53.00**	**150.00**	**156.00**	**4.00**	**26.50**	**13.25**	**NBR**	**CS-1103**
P761386501	160.00	138.00	53.00	150.00	156.00	4.00	26.50	13.25	FKM	CS-1104
P761430901	165.00	143.00	57.00	155.00	161.00	6.00	26.50	15.25	NBR	CS-958
P761436601	165.10	143.10	58.00	155.10	161.10	6.00	22.50	15.25	FKM	CS-691
P761480901	170.00	148.00	57.00	160.00	166.00	6.00	26.50	15.25	NBR	CS-888
P761580903	180.00	158.00	48.00	170.00	176.00	6.00	26.50	10.80	NBR	CS-1483
P761580901	**180.00**	**158.00**	**57.00**	**170.00**	**176.00**	**6.00**	**26.50**	**15.25**	**NBR**	**CS-827**
P761580902	180.00	158.00	57.00	170.00	176.00	6.00	26.50	15.25	NBR	CS-834
P761756501	200.00	175.00	64.00	190.00	196.00	4.50	31.50	16.25	FKM	CS-747
P761750901	**200.00**	**175.00**	**64.00**	**190.00**	**195.00**	**4.50**	**31.50**	**16.25**	**NBR**	**CS-1107**
P761750903	200.00	175.00	48.00	190.00	196.00	4.50	31.50	8.30	NBR	CS-3133
P761750902	200.00	175.00	64.00	190.00	196.00	4.50	31.50	16.25	NBR	CS-912
P761756601	200.00	175.00	64.00	190.00	196.00	4.50	31.50	16.25	FKM	CS-694
P761956501	220.00	195.00	71.00	210.00	216.00	8.00	31.50	19.75	FKM	CS-791
P761950902	**220.00**	**195.00**	**71.00**	**210.00**	**216.00**	**8.00**	**31.50**	**19.75**	**NBR**	**CS-1105**
P761950802	220.00	195.00	58.00	210.00	216.00	8.00	31.50	13.30	NBR	CS-685
P762000901	225.00	200.00	71.00	215.00	221.00	8.00	31.50	19.75	NBR	CS-910
P762250901	250.00	225.00	85.00	240.00	246.00	15.00	31.50	26.75	NBR	CS-940
P762256401	250.00	225.00	85.00	240.00	246.00	15.00	31.50	26.75	FKM	CS-479
P762317001	256.00	231.00	85.00	246.00	252.00	15.00	31.50	26.75	BFT	CS-714
P762550902	280.00	255.00	85.00	270.00	276.00	15.00	31.50	26.75	NBR	CS-967
P763200901	350.00	320.00	80.00	338.00	344.00	8.50	36.50	21.75	NBR	CS-1985
P763306502	360.00	330.00	80.00	348.00	354.00	8.50	36.50	21.75	FKM	CS-2848
P763306501	360.00	330.00	80.00	348.00	354.00	8.50	80.00	21.75	FKM	CS-899
P763700901	400.00	370.00	80.00	388.00	394.00	8.50	36.50	21.75	NBR	CS-2877
P763900801	420.00	390.00	80.00	408.00	414.00	8.50	36.50	21.75	NBR	CS-1653
P764206501	450.00	420.00	80.00	438.00	444.00	8.50	36.50	21.75	FKM	CS-2930
P764200801	450.00	420.00	80.00	438.00	444.00	8.50	36.50	21.75	NBR	CS-536

Bold sizes are readily available in stock.
Other materials are available on request.

P02

Single Acting Piston Cup Seal

DETAILS

P02 piston cup seals are used on rams or plungers in both pneumatic and hydraulic applications. Fabric reinforce piston cup seals commonly used in hydraulic applications with pressure rating up to 100 Bar or in applications where a larger extrusion gaps are present.

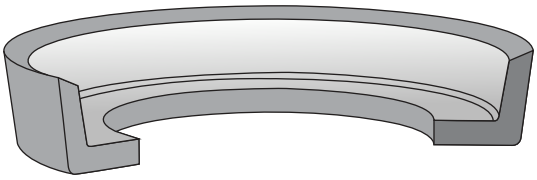

COMPATIBILITY

Mineral oils, hydraulic oils, water and air.

MATERIAL

Nitrile Rubber / Fabric 75/80 Shore A

APPLICATION

Standard cylinders.

OPERATING CONDITIONS

Temperature Range	:	-20°C to + 100°C
Pressure	:	100 Bar
Speed	:	0.5 m/s

FEATURES

- Easy to assemble.
- Excellent service life.
- Good overall performance.
- Well proven design.
- Economical cost.
- Simple accessories.

SURFACE ROUGHNESS

Static	:	1.6 μmRa
Dynamic	:	0.4 μmRa

P02

Single Acting Piston Cup Seal

MAX SPARE LIMITED
QUALITY. PRECISION. SPEED.

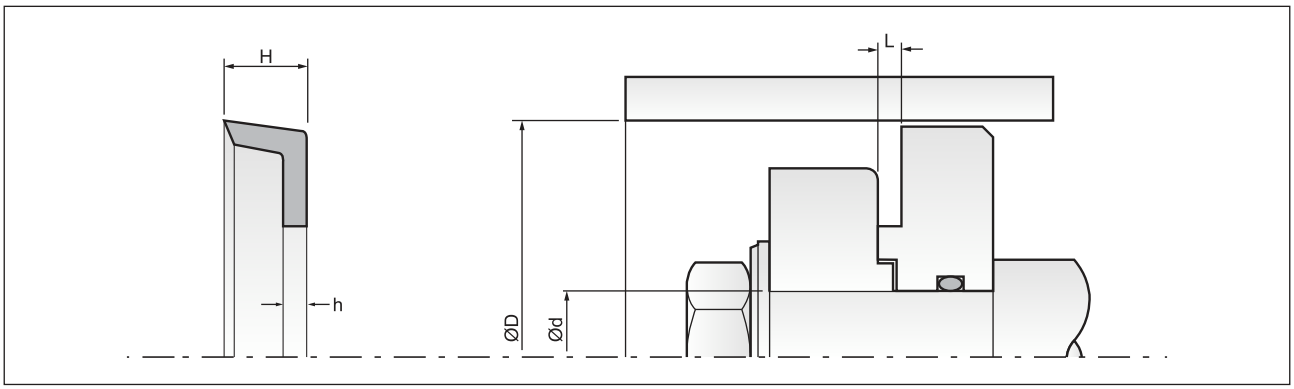

Part No.	D (H11)	d (h10)	H	h	L (+0.2)	Material	Mould No.
P020048301	12.70	4.76	6.35	1.58	1.58	NBR/FABRIC	CWB-727
P020048302	14.28	4.76	6.74	1.58	1.58	NBR/FABRIC	CWB-733
P02098313	19.05	9.52	5.56	2.38	2.38	NBR/FABRIC	CWB-710
P02009A601	22.00	9.00	7.50	2.00	2.00	NBR/FABRIC	CWB-754
P020098310	22.22	9.52	9.52	2.38	2.38	NBR/FABRIC	CWB-600
P020098402	25.00	9.00	8.00	2.00	2.00	NBR/FABRIC	CWB-790
P020098401	25.00	9.60	11.00	3.00	3.00	NBR/FABRIC	CWB-768
P020119001	25.00	11.00	16.50	2.00	2.00	NBR/FABRIC	CWB-776
P020148401	25.00	14.50	5.50	1.35	1.35	NBR/FABRIC	CWB-671
P020258306	25.40	0.00	11.11	2.38	2.38	NBR/FABRIC	CWB-533
P020068301	25.40	6.35	11.11	2.38	2.38	NBR/FABRIC	CWB-370
P020098305	25.40	9.52	11.11	2.38	2.38	NBR/FABRIC	CWB-589
P020128323	25.40	12.70	6.35	2.79	2.79	NBR/FABRIC	CWB-736
P020128314	25.40	12.70	11.11	2.38	2.38	NBR/FABRIC	CWB-590
P020288303	28.57	0.00	11.11	2.38	2.38	NBR/FABRIC	CWB-531
P020060602	28.57	6.35	17.44	3.17	3.17	NBR/FABRIC	CWB-715
P020158302	28.57	15.87	9.52	3.17	3.17	NBR/FABRIC	CWB-697
P020151105	28.57	15.87	9.52	4.70	4.70	NBR/FABRIC	CWB-668
P020098312	29.00	9.00	12.00	2.00	2.00	NBR/FABRIC	CWB-692
P020090601	29.30	9.60	15.00	5.00	5.00	NBR/FABRIC	CWB-673
P020318302	31.75	0.00	11.11	2.38	2.38	NBR/FABRIC	CWB-354
P020098302	31.75	9.52	11.11	2.38	2.38	NBR/FABRIC	CWB-369
P020128403	34.92	12.70	12.70	3.17	3.17	NBR/FABRIC	CWB-765
P020158304	34.92	15.87	11.11	2.38	2.38	NBR/FABRIC	CWB-367
P020158401	34.92	15.87	12.70	6.35	6.35	NBR/FABRIC	CWB-756
P020148301	35.00	14.00	9.00	3.00	3.00	NBR/FABRIC	CWB-787
P020188302	37.00	18.00	10.00	2.00	2.00	NBR/FABRIC	CWB-704
P020178401	38.00	17.00	8.50	2.00	2.00	NBR/FABRIC	CWB-688
P020388301	38.10	0.00	12.70	3.17	3.17	NBR/FABRIC	CWB-516
P020151008.	38.10	6.35	12.70	3.17	3.17	NBR/FABRIC	CWB-760
P020098303	38.10	9.52	12.70	3.17	3.17	NBR/FABRIC	CWB-366
P020151008	38.10	15.24	12.70	3.17	3.17	NBR/FABRIC	CWB-711
P020158305	38.10	15.87	12.70	3.17	3.17	NBR/FABRIC	CWB-406
P020158315	38.10	15.87	12.70	3.17	3.17	NBR/FABRIC	CWB-728
P020198309	38.10	19.05	12.70	3.17	3.17	NBR/FABRIC	CWB-700
P020170601	38.50	17.00	17.00	5.00	5.00	NBR/FABRIC	CWB-674
P020108302	40.00	10.00	13.00	5.00	5.00	NBR/FABRIC	CWB-725
P020108301	40.00	10.00	19.00	4.50	4.50	NBR/FABRIC	CWB-594
P020158311	40.00	15.00	12.50	4.00	4.00	NBR/FABRIC	CWB-724
P020418302	41.27	0.00	12.70	3.17	3.17	NBR/FABRIC	CWB-532
P020068305	41.27	6.35	12.70	3.17	3.17	NBR/FABRIC	CWB-761
P020098309	41.27	9.52	14.28	3.17	3.17	NBR/FABRIC	CWB-627
P020151009	41.27	15.24	12.70	3.17	3.17	NBR/FABRIC	CWB-730
P020198307	41.27	19.05	12.70	3.17	3.17	NBR/FABRIC	CWB-628
P020098311	42.86	9.52	17.00	3.00	3.00	NBR/FABRIC	CWB-666
P020188304	44.00	18.50	13.00	5.00	5.00	NBR/FABRIC	CWB-720
P02019A601	44.00	19.00	14.50	2.50	2.50	NBR/FABRIC	CWB-753
P020218401	44.00	21.00	15.00	5.00	5.00	NBR/FABRIC	CWB-769
P020448301	44.45	0.00	12.70	3.17	3.17	NBR/FABRIC	CWB-517
P020098315	44.45	9.39	12.70	3.17	3.17	NBR/FABRIC	CWB-718
P020128601	44.45	12.70	15.80	4.00	4.00	FKM/FABRIC	CWB-651
P020158303	44.45	15.87	12.70	3.17	3.17	NBR/FABRIC	CWB-355

Part No.	D (H11)	d (h10)	H	h	L (+0.2)	Material	Mould No.
P020158308	44.45	15.87	15.00	4.00	4.00	NBR/FABRIC	CWB-681
P020178301	44.45	17.46	12.70	3.17	3.17	NBR/FABRIC	CWB-365
P02009A602	45.00	9.50	14.00	4.00	4.00	NBR/FABRIC	CWB-763
P020201003	45.00	20.00	13.00	3.30	3.30	NBR/FABRIC	CWB-698
P02021A601	45.00	21.30	16.50	3.00	3.00	NBR/FABRIC	CWB-762
P020220601	45.00	22.00	14.50	4.00	4.00	NBR/FABRIC	CWB-693
P020229001	45.00	22.00	22.00	2.00	2.00	NBR/FABRIC	CWB-777
P020228401	47.00	22.00	20.00	6.00	6.00	NBR/FABRIC	CWB-677
P020098306	47.62	9.52	12.70	3.17	3.17	NBR/FABRIC	CWB-591
P020158307	47.62	15.87	12.70	3.17	3.17	NBR/FABRIC	CWB-593
P020060601	50.00	6.00	16.00	6.00	6.00	NBR/FABRIC	CWB-684
P020080601	50.00	8.00	16.00	4.50	4.50	NBR/FABRIC	CWB-586
P020080701	50.00	8.50	14.00	7.00	7.00	NBR/FABRIC	CWB-721
P020168304	50.00	16.00	12.00	3.50	3.50	NBR/FABRIC	CWB-694
P020228306	50.00	22.00	12.00	3.00	3.00	NBR/FABRIC	CWB-739
P020228303	50.00	22.75	12.50	3.00	3.00	NBR/FABRIC	CWB-432
P020358501	50.00	35.00	7.20	2.20	2.20	FKM/Fabric	CWB-644
P020508308	50.80	0.00	12.70	3.17	3.17	NBR/FABRIC	CWC-433
P020098301	50.80	9.52	12.70	3.17	3.17	NBR/FABRIC	CWC-475
P020118301	50.80	11.11	12.70	3.17	3.17	NBR/FABRIC	CWC-567
P020128305	50.80	12.70	12.70	3.17	3.17	NBR/FABRIC	CWC-468
P020128304	50.80	12.70	12.70	3.96	3.96	NBR/FABRIC	CWC-446
P020158301	50.80	15.87	12.70	3.17	3.17	NBR/FABRIC	CWC-439
P020158309	50.80	15.87	20.57	4.76	4.76	NBR/FABRIC	CWC-803
P020258302	50.80	25.40	12.70	3.17	3.17	NBR/FABRIC	CWC-506
P020188301	52.00	18.00	16.00	3.00	3.00	NBR/FABRIC	CWC-782
P020121109	52.80	12.70	12.70	3.96	3.96	NBR/FABRIC	CWC-751
P020228301	53.97	22.22	15.87	4.74	4.74	NBR/FABRIC	CWC-434
P020128401	55.00	12.50	14.00	3.20	3.20	NBR/FABRIC	CWC-773
P020068303	57.15	6.35	19.05	6.35	6.35	NBR/FABRIC	CWC-693
P020121110	57.15	12.70	12.70	3.05	3.05	NBR/FABRIC	CWB-667
P020128303	57.15	12.70	12.70	3.17	3.17	NBR/FABRIC	CWC-445
P020128311	57.15	12.70	19.05	3.17	3.17	NBR/FABRIC	CWC-591
P020151106	57.15	15.87	15.87	4.20	4.20	NBR/FABRIC	CWC-758
P020198302	57.15	19.05	12.70	3.17	3.17	NBR/FABRIC	CWC-492
P020258308	57.15	25.40	12.70	3.17	3.17	NBR/FABRIC	CWC-493
P02037B101	57.15	37.59	15.50	3.50	3.50	NBR/FABRIC	CWC-865
P020148402	60.00	14.00	20.00	5.00	5.00	NBR/FABRIC	CWC-905
P020168303	60.00	16.00	12.00	3.50	3.50	NBR/FABRIC	CWC-786
P020268301	60.00	26.00	9.00	3.30	3.30	NBR/FABRIC	CWC-917
P020608301	60.32	0.00	12.70	3.17	3.17	NBR/FABRIC	CWC-467
P020128315	60.32	12.70	12.70	3.17	3.17	NBR/FABRIC	CWC-664
P020158310	60.32	15.87	12.70	4.44	4.44	NBR/FABRIC	CWC-810
P020258310	60.32	25.40	12.70	3.17	3.17	NBR/FABRIC	CWC-488
P020638303	63.50	0.00	12.70	3.17	3.17	NBR/FABRIC	CWC-432
P020098304	63.50	9.52	12.70	3.17	3.17	NBR/FABRIC	CWC-494
P020158306	63.50	15.87	12.70	3.17	3.17	NBR/FABRIC	CWC-605
P020198301	63.50	19.05	12.70	3.17	3.17	NBR/FABRIC	CWC-450
P020258309	63.50	25.40	12.70	3.17	3.17	NBR/FABRIC	CWC-495
P020258320	63.50	25.40	12.70	3.20	3.20	NBR/FABRIC	CWC-820
P020288302	63.50	28.57	12.70	3.17	3.17	NBR/FABRIC	CWC-397
P020318303	63.50	31.75	12.70	3.17	3.17	NBR/FABRIC	CWC-451

Bold sizes are readily available in stock.
Other materials are available on request.

P02

Single Acting Piston Cup Seal

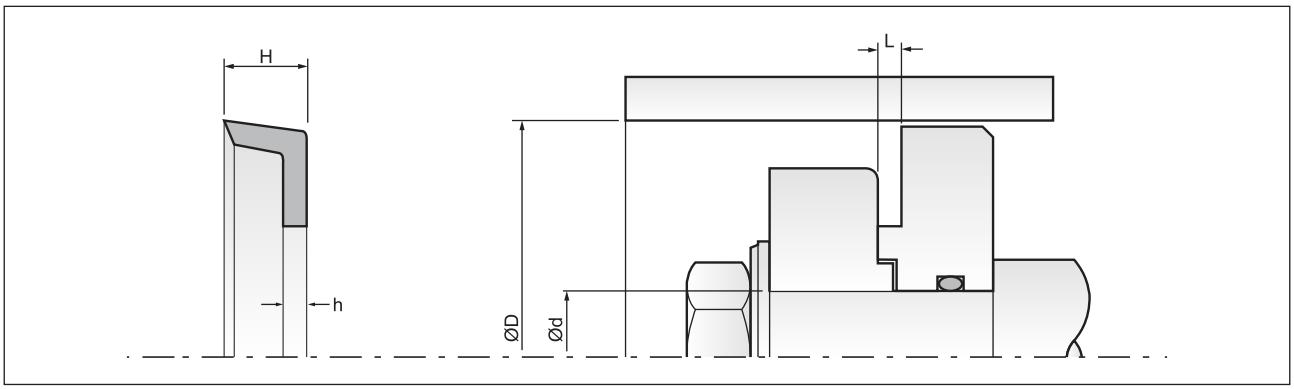

Part No.	D (H11)	d (h10)	H	h	L (+0.2)	Material	Mould No.
P020328302	63.50	32.00	14.00	4.00	4.00	NBR/FABRIC	CWC-648
P020348303	63.50	34.92	12.70	3.17	3.17	NBR/FABRIC	CWC-466
P020168301	65.00	16.00	22.00	7.00	7.00	NBR/FABRIC	CWC-613
P020228304	66.55	22.10	20.50	6.35	6.35	NBR/FABRIC	CWC-706
P020128312	66.67	12.70	17.00	4.00	4.00	NBR/FABRIC	CWC-599
P020198402	66.67	19.05	19.05	4.74	4.74	NBR/FABRIC	CWC-870
P020228305	66.67	22.22	20.63	5.53	5.53	NBR/FABRIC	CWC-795
P020228403	66.67	22.22	20.63	5.56	5.56	NBR/FABRIC	CWC-884
P020128319	68.00	12.00	16.76	5.10	5.10	NBR/FABRIC	CWC-732
P020698302	69.85	0.00	12.70	3.17	3.17	NBR/FABRIC	CWC-452
P020198304	69.85	19.05	12.70	3.17	3.17	NBR/FABRIC	CWC-590
P020258311	69.85	25.40	12.70	3.17	3.17	NBR/FABRIC	CWC-490
P020258304	69.85	25.40	19.05	4.76	4.76	NBR/FABRIC	CWC-692
P020388303	69.85	38.10	12.70	3.17	3.17	NBR/FABRIC	CWC-476
P020388301	69.85	38.10	12.70	3.17	3.17	NBR/FABRIC	CWC-419
P020388402	69.85	38.10	12.70	3.17	3.17	NBR/FABRIC	CWC-800
P02012A601	70.00	12.00	18.00	4.00	4.00	NBR/FABRIC	CWC-876
P020128322	70.00	12.00	18.00	4.50	4.50	NBR/FABRIC	CWC-806
P020168302	70.00	16.00	14.00	4.00	4.00	NBR/FABRIC	CWC-765
P020170602	70.00	17.00	18.50	5.00	5.00	NBR/FABRIC	CWC-813
P020488301	70.00	48.00	10.00	4.00	4.00	NBR/FABRIC	CWC-740
P020128324	72.89	12.70	19.05	4.76	4.76	NBR/FABRIC	CWC-877
P020068304	76.20	6.70	8.70	3.17	3.17	NBR/FABRIC	CWC-808
P020128302	76.20	12.70	15.87	3.96	3.96	NBR/FABRIC	CWC-443
P020128306	76.20	12.70	15.87	3.96	3.96	NBR/FABRIC	CWC-469
P020198306	76.20	19.05	15.87	3.96	3.96	NBR/FABRIC	CWC-671
P020198403	76.20	19.05	19.05	4.74	4.74	NBR/FABRIC	CWC-869
P020258305	76.20	25.40	15.87	3.96	3.96	NBR/FABRIC	CWC-438
P020258404	76.20	25.40	19.05	4.76	4.76	NBR/FABRIC	CWC-824
P020298301	76.20	29.50	15.00	3.50	3.50	NBR/FABRIC	CWC-651
P020318304	76.20	31.75	15.87	3.96	3.96	NBR/FABRIC	CWC-465
P020311003	76.20	31.75	19.05	4.76	4.76	NBR/FABRIC	CWC-760
P020348304	76.20	34.92	15.87	3.96	3.96	NBR/FABRIC	CWC-530
P020388306	76.20	38.10	15.87	3.96	3.96	NBR/FABRIC	CWC-515
P020418303	76.20	41.27	15.87	3.96	3.96	NBR/FABRIC	CWC-501
P020448302	76.20	44.45	15.87	3.96	3.96	NBR/FABRIC	CWC-440
P020478303	76.20	47.62	15.87	3.96	3.96	NBR/FABRIC	CWC-522
P020228402	79.37	22.22	19.05	4.74	4.74	NBR/FABRIC	CWC-868
P020258314	79.37	25.40	15.87	3.96	3.96	NBR/FABRIC	CWC-658
P020201002	80.00	20.50	15.00	5.00	5.00	NBR/FABRIC	CWC-720
P020488401	80.00	48.00	32.00	5.00	5.00	NBR/FABRIC	CWC-562
P020098307	82.55	9.52	15.87	3.96	3.96	NBR/FABRIC	CWC-659
P020128309	82.55	12.70	15.87	3.96	3.96	NBR/FABRIC	CWC-523
P020198404	82.55	19.05	19.05	4.74	4.74	NBR/FABRIC	CWC-867
P020198310	82.55	19.05	19.05	4.74	4.74	NBR/FABRIC	CWC-801
P020258313	82.55	25.40	15.87	3.96	3.96	NBR/FABRIC	CWC-518
P020258318	82.55	25.40	20.57	6.35	6.35	NBR/FABRIC	CWC-707
P020258406	82.55	25.40	20.63	5.56	5.56	NBR/FABRIC	CWC-885
P020318311	82.55	31.75	19.05	4.76	4.76	NBR/FABRIC	CWC-809
P020098308	85.72	9.52	15.87	3.96	3.96	NBR/FABRIC	CWC-660
P020888302	88.90	0.00	15.87	3.96	3.96	NBR/FABRIC	CWC-430
P020068302	88.90	6.35	15.87	3.96	3.96	NBR/FABRIC	CWC-661

Part No.	D (H11)	d (h10)	H	h	L (+0.2)	Material	Mould No.
P020128307	88.90	12.70	15.87	3.96	3.96	NBR/FABRIC	CWC-502
P020158316	88.90	15.87	12.70	3.93	3.93	NBR/FABRIC	CWC-846
P020258307	88.90	25.40	15.87	3.96	3.96	NBR/FABRIC	CWC-478
P020318306	88.90	31.75	15.87	3.96	3.96	NBR/FABRIC	CWC-662
P020388304	88.90	38.10	15.87	3.96	3.96	NBR/FABRIC	CWC-489
P020478301	88.90	47.62	15.87	3.96	3.96	NBR/FABRIC	CWC-479
P020508310	88.90	50.80	15.87	3.96	3.96	NBR/FABRIC	CWC-491
P020608302	88.90	60.32	15.87	3.96	3.96	NBR/FABRIC	CWC-503
P020128320	90.00	12.00	17.00	3.50	3.50	NBR/FABRIC	CWC-767
P020128321	90.00	12.00	20.00	4.00	4.00	NBR/FABRIC	CWC-769
P020208401	90.00	20.00	17.00	5.00	5.00	NBR/FABRIC	CWC-731
P020258303	90.00	25.00	18.00	5.00	5.00	NBR/FABRIC	CWC-196
P020128316	95.25	12.70	15.87	3.96	3.96	NBR/FABRIC	CWC-663
P020198305	95.25	19.05	15.87	3.96	3.96	NBR/FABRIC	CWC-665
P020388307	95.25	38.10	22.22	6.35	6.35	NBR/FABRIC	CWC-691
P020301002	97.00	30.00	22.00	7.00	7.00	NBR/FABRIC	CWC-641
P020288305	98.30	28.44	20.50	6.35	6.35	NBR/FABRIC	CWC-708
P020258405	98.42	25.40	20.82	4.74	4.74	NBR/FABRIC	CWC-871
P020288401	98.42	28.57	20.63	5.56	5.56	NBR/FABRIC	CWC-886
P020500801	100.00	50.00	15.50	6.00	6.00	NBR/FABRIC	CWC-712
P020500601	100.00	50.00	16.00	5.00	5.00	NBR/FABRIC	CWC-822
P020568301	100.00	56.00	18.00	6.00	6.00	NBR/FABRIC	CWC-830
P020478305	101.50	47.00	13.00	4.50	4.50	NBR/FABRIC	CWD-336
P020128310	101.60	12.70	15.87	3.96	3.96	NBR/FABRIC	CWD-302
P020208302	101.60	20.00	22.00	6.00	6.00	NBR/FABRIC	CWD-449
P020288304	101.60	28.57	19.05	4.32	4.32	NBR/FABRIC	CWD-364
P020388305	101.60	38.10	15.87	3.96	3.96	NBR/FABRIC	CWD-294
P020418304	101.60	41.27	15.87	3.96	3.96	NBR/FABRIC	CWD-308
P020448303	101.60	44.45	15.87	3.96	3.96	NBR/FABRIC	CWD-322
P02048304	101.60	44.50	16.00	4.00	4.00	NBR/FABRIC	CWD-344
P020448401	101.60	44.50	19.00	4.80	4.80	NBR/FABRIC	CWD-330
P020478302	101.60	47.62	15.87	3.96	3.96	NBR/FABRIC	CWD-292
P020508309	101.60	50.80	15.87	3.96	3.96	NBR/FABRIC	CWD-277
P020518401	101.60	51.59	20.63	4.76	4.76	NBR/FABRIC	CWD-422
P020578303	101.60	57.15	15.87	3.96	3.96	NBR/FABRIC	CWD-332
P020638304	101.60	63.50	15.87	3.96	3.96	NBR/FABRIC	CWD-290
P020258403	104.77	25.40	22.22	4.76	4.76	NBR/FABRIC	CWD-431
P020348305	107.95	34.92	15.87	3.96	3.96	NBR/FABRIC	CWD-350
P020388308	107.95	38.10	22.22	6.35	6.35	NBR/FABRIC	CWD-365
P021148301	114.30	0.00	15.87	3.96	3.96	NBR/FABRIC	CWD-282
P020198303	114.30	19.05	15.87	3.96	3.96	NBR/FABRIC	CWD-291
P020478304	114.30	47.62	15.87	3.96	3.96	NBR/FABRIC	CWD-303
P020538301	114.30	53.97	19.05	5.20	5.20	NBR/FABRIC	CWD-472
P020578302	114.30	57.15	15.87	3.96	3.96	NBR/FABRIC	CWD-318
P020638305	114.30	63.50	15.87	3.96	3.96	NBR/FABRIC	CWD-295
P020321001	120.00	32.00	22.00	7.00	7.00	NBR/FABRIC	CWD-339
P020608303	120.00	60.00	19.00	6.00	6.00	NBR/FABRIC	CWD-450
P020708301	120.00	70.00	16.00	4.00	4.00	NBR/FABRIC	CWD-300
P020128317	120.65	12.70	15.87	3.96	3.96	NBR/FABRIC	CWD-351
P020318315	120.65	31.75	20.30	7.35	7.35	NBR/FABRIC	CWD-432
P020318310	120.65	31.75	20.57	6.35	6.35	NBR/FABRIC	CWD-369
P020318401	120.65	31.75	20.63	5.56	5.56	NBR/FABRIC	CWD-466

Bold sizes are readily available in stock.
Other materials are available on request.

P02

Single Acting Piston Cup Seal

MAX SPARE LIMITED
QUALITY. PRECISION. SPEED.

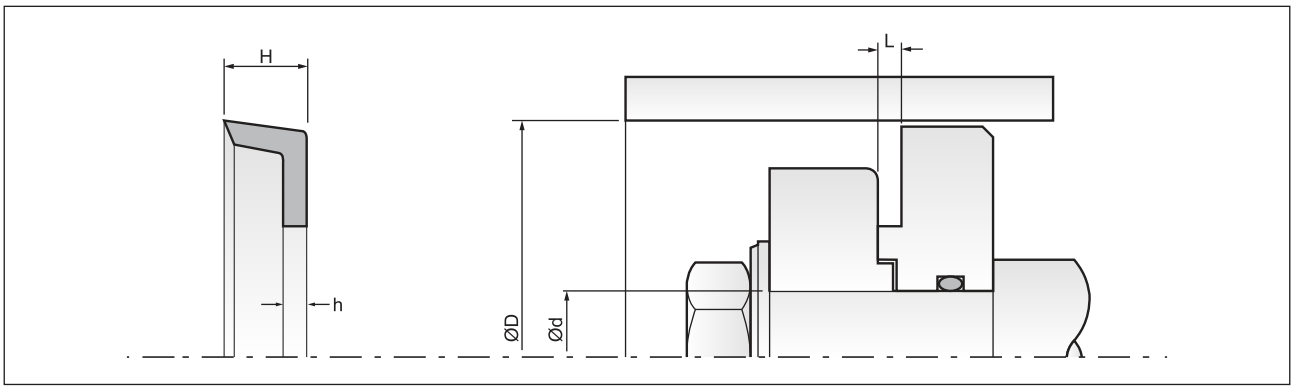

Part No.	D (H11)	d (h10)	H	h	L (+0.2)	Material	Mould No.
P020508314	120.65	50.80	15.87	3.96	3.96	NBR/FABRIC	CWD-435
P020958302	125.00	95.00	20.00	5.50	5.50	NBR/FABRIC	CWD-396
P021278303	127.00	0.00	19.05	4.76	4.76	NBR/FABRIC	CWD-283
P020258312	127.00	25.40	19.05	4.76	4.76	NBR/FABRIC	CWD-293
P020318307	127.00	31.75	19.05	4.76	4.76	NBR/FABRIC	CWD-352
P020638307	127.00	63.50	19.05	4.76	4.76	NBR/FABRIC	CWD-299
P020768303	128.00	76.20	14.00	3.10	3.10	NBR/FABRIC	CWD-400
P020128308	133.35	12.70	19.05	4.76	4.76	NBR/FABRIC	CWD-296
P020198308	139.70	19.05	19.05	4.76	4.76	NBR/FABRIC	CWD-382
P020318308	139.70	31.75	19.05	4.76	4.76	NBR/FABRIC	CWD-353
P020508312	139.70	50.80	19.05	4.76	4.76	NBR/FABRIC	CWD-327
P020381001	145.00	38.00	22.00	7.00	7.00	NBR/FABRIC	CWD-340
P020388310	146.05	38.10	20.57	6.35	6.35	NBR/FABRIC	CWD-370
P020388403	146.05	38.10	20.63	5.56	5.56	NBR/FABRIC	CWD-465
P020708303	150.00	70.00	20.00	5.00	5.00	NBR/FABRIC	CWD-462
P020708302	150.00	70.00	20.00	5.50	5.50	NBR/FABRIC	CWD-337
P021000802	150.00	100.00	18.00	7.00	7.00	NBR/FABRIC	CWD-384
P021208301	150.00	120.00	17.00	3.50	3.50	NBR/FABRIC	CWD-405
P020888305	150.50	88.00	21.00	4.00	4.00	NBR/FABRIC	CWE-468
P020738302	151.63	73.00	16.60	5.00	5.00	NBR/FABRIC	CWE-644
P020258319	152.00	25.00	17.50	4.00	4.00	NBR/FABRIC	CWE-502
P021528303	152.40	0.00	19.05	4.76	4.76	NBR/FABRIC	CWE-307
P020128318	152.40	12.70	19.05	4.76	4.76	NBR/FABRIC	CWE-396
P020258401	152.40	25.40	21.00	4.25	4.25	NBR/FABRIC	CWE-716
P020508311	152.40	50.80	19.05	4.76	4.76	NBR/FABRIC	CWE-338
P020638306	152.40	63.50	19.05	4.76	4.76	NBR/FABRIC	CWE-320
P020791901	152.40	79.37	19.05	4.75	4.75	CR/FABRIC	CWE-621
P020888303	152.40	88.90	19.05	4.76	4.76	NBR/FABRIC	CWE-330
P020888304	152.40	88.90	22.22	6.35	6.35	NBR/FABRIC	CWE-419
P020928301	152.40	92.07	19.05	3.17	3.17	NBR/FABRIC	CWE-523
P020988301	152.40	98.00	19.00	5.00	5.00	NBR/FABRIC	CWD-345
P021228301	153.00	122.00	14.00	3.17	3.17	NBR/FABRIC	CWE-465
P020751101	155.00	75.40	19.50	5.50	5.50	NBR/FABRIC	CWE-536
P020901002	158.80	90.00	27.00	5.00	5.00	NBR/FABRIC	CWE-553
P020858301	160.00	85.00	17.00	5.25	5.25	NBR/FABRIC	CWE-387
P020998301	160.00	99.00	15.00	5.50	5.50	NBR/FABRIC	CWE-312
P021108301	170.00	30.00	20.00	5.00	5.00	NBR/FABRIC	CWE-348
P021108303	170.00	110.00	20.50	5.50	5.50	NBR/FABRIC	CWE-526
P020701002	175.00	70.00	27.00	7.00	7.00	NBR/FABRIC	CWE-383
P020318309	177.80	31.75	19.05	4.76	4.76	NBR/FABRIC	CWE-397
P020508313	177.80	50.80	19.05	4.76	4.76	NBR/FABRIC	CWE-398
P021018305	177.80	101.60	19.05	4.76	4.76	NBR/FABRIC	CWE-399
P021390901	177.80	139.70	15.00	3.50	3.50	NBR/FABRIC	CWE-567
P020508301	180.00	50.00	20.00	5.00	5.00	NBR/FABRIC	CWE-379
P021000801	180.00	100.00	20.80	6.00	6.00	NBR/FABRIC	CWE-439
P021000601	180.00	100.50	21.70	6.00	6.00	NBR/FABRIC	CWE-638
P020418305	184.15	41.27	19.05	4.76	4.76	NBR/FABRIC	CWE-400
P020908302	200.00	90.00	20.00	5.00	5.00	NBR/FABRIC	CWE-615
P021698301	202.50	169.00	15.00	3.00	3.00	NBR/FABRIC	CWE-486
P022038302	203.20	0.00	25.40	4.76	4.76	NBR/FABRIC	CWE-664
P020258315	203.20	25.40	25.40	4.76	4.76	NBR/FABRIC	CWE-401
P020318305	203.20	31.75	25.40	4.76	4.76	NBR/FABRIC	CWE-331

Part No.	D (H11)	d (h10)	H	h	L (+0.2)	Material	Mould No.
P020388309	203.20	38.10	22.22	6.35	6.35	NBR/FABRIC	CWE-420
P021680701	203.20	168.27	14.28	3.17	3.17	NBR/FABRIC	CWE-647
P021638301	203.50	163.00	19.00	6.00	6.00	NBR/FABRIC	CWE-599
P021278304	205.96	127.18	21.08	6.35	6.35	NBR/FABRIC	CWE-663
P020698303	209.55	69.85	22.22	6.35	6.35	NBR/FABRIC	CWE-590
P021108302	210.00	110.00	20.00	6.00	6.00	NBR/FABRIC	CWE-444
P021908301	230.00	190.00	20.00	15.00	15.00	NBR/FABRIC	CWE-559
P020188303	250.00	18.00	25.00	5.00	5.00	NBR/FABRIC	CWE-591
P020388311	250.00	38.00	20.00	3.00	3.00	NBR/FABRIC	CWE-549
P02190A601	250.00	190.00	20.00	5.00	5.00	NBR/FABRIC	CWE-718
P022548301	254.00	0.00	31.75	6.35	6.35	NBR/FABRIC	CWE-622
P020258316	254.00	25.40	25.40	4.76	4.76	NBR/FABRIC	CWE-402
P022098301	254.00	209.55	17.45	5.53	5.53	NBR/FABRIC	CWE-545
P022168402	254.00	216.00	17.00	10.00	10.00	NBR/FABRIC	CWE-488
P021058301	256.00	105.00	32.00	5.00	5.00	NBR/FABRIC	CWE-564
P022098302	260.35	209.55	17.45	5.55	5.55	NBR/FABRIC	CWE-641
P020128313	279.40	12.70	25.40	4.74	4.74	NBR/FABRIC	CWE-370
P021798301	279.40	179.40	25.40	4.80	4.80	NBR/FABRIC	CWE-351
P022008301	280.00	200.00	28.00	6.00	6.00	NBR/FABRIC	CWE-512
P022030601	282.00	203.50	25.00	5.00	5.00	NBR/FABRIC	CWE-518
P022548302	304.80	254.00	22.70	12.70	12.70	NBR/FABRIC	CWE-619
P021320601	305.00	132.00	27.00	10.00	10.00	NBR/FABRIC	CWE-633
P022458402	310.00	245.00	29.00	4.50	4.50	NBR/FABRIC	CWE-462
P022418601	314.96	241.30	30.16	4.76	4.76	FKM/Fabric	CWE-680
P022308301	320.00	230.00	25.00	5.00	5.00	NBR/FABRIC	CWE-589
P022410601	355.00	241.30	32.00	6.50	6.50	NBR/FABRIC	CWE-614
P022658301	355.60	265.00	31.00	6.50	6.50	NBR/FABRIC	CWE-388
P02260701	355.60	266.00	20.00	6.00	6.00	NBR/FABRIC	CWE-618
P022670601	355.60	267.00	20.00	6.00	6.00	NBR/FABRIC	CWE-506
P022782201	355.60	278.00	23.00	6.00	6.00	CR/FABRIC	CWE-371
P022798301	355.60	279.40	25.40	5.58	5.58	NBR/FABRIC	CWE-542
P023040601	355.80	304.60	26.20	7.50	7.50	NBR/FABRIC	CWE-364
P022680601	356.00	268.00	24.50	9.00	9.00	NBR/FABRIC	CWE-554
P022810601	360.00	281.00	26.00	5.00	5.00	NBR/FABRIC	CWE-611
P022800601	400.00	280.00	28.50	11.00	11.00	NBR/FABRIC	CWE-639
P022951001	406.00	295.00	41.50	5.50	5.50	NBR/FABRIC	CWE-451
P023100601	406.00	310.00	28.50	5.50	5.50	NBR/FABRIC	CWE-582
P021261201	406.40	126.50	32.00	6.10	6.10	NBR/FABRIC	CWE-367
P023188401	406.40	318.28	25.40	6.00	6.00	NBR/FABRIC	CWE-699
P023578301	408.00	357.00	29.00	6.80	6.80	NBR/FABRIC	CWE-532
P023200601	450.00	320.00	28.00	11.00	11.00	NBR/FABRIC	CWE-640
P02350A601	455.00	350.00	25.00	6.00	6.00	NBR/FABRIC	CWE-688
P023948401	457.00	394.00	36.30	5.00	5.00	NBR/FABRIC	CWE-279
P023550601	457.20	355.60	31.75	6.35	6.35	NBR/FABRIC	CWE-605
P023568301	460.00	356.00	27.00	6.00	6.00	NBR/FABRIC	CWE-572
P024088401	508.00	408.00	23.00	7.00	7.00	NBR/FABRIC	CWE-495
P024308301	508.00	430.60	32.00	5.60	5.60	NBR/FABRIC	CWE-609
P024388401	508.00	438.15	28.00	4.00	4.00	NBR/FABRIC	CWE-454
P024450701	508.00	445.00	30.00	4.50	4.50	NBR/FABRIC	CWE-575
P024450702	510.00	445.00	32.00	7.00	7.00	NBR/FABRIC	CWE-584
P024108401	532.00	410.00	26.00	5.00	5.00	NBR/FABRIC	CWE-384
P024708301	540.00	470.00	30.00	4.00	4.00	NBR/FABRIC	CWE-715

Bold sizes are readily available in stock.
Other materials are available on request.

P02

Single Acting Piston Cup Seal

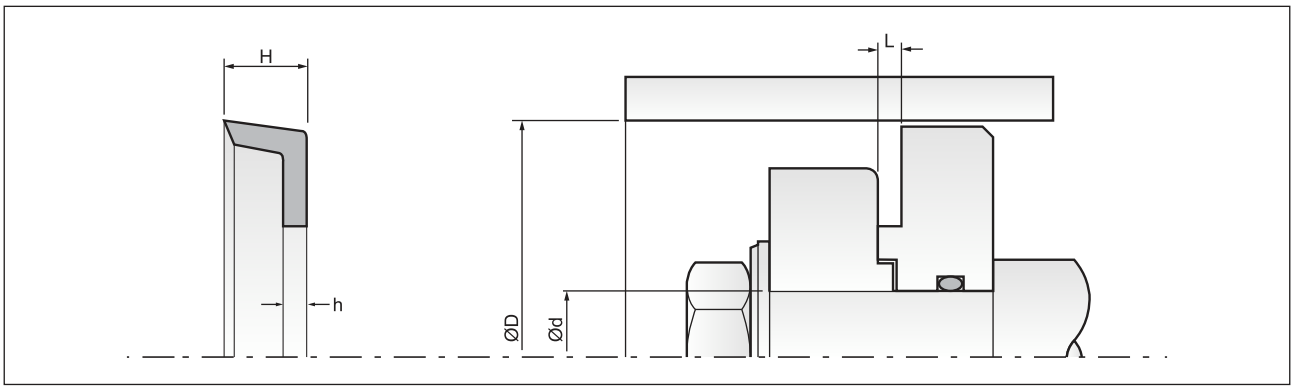

Part No.	D (H11)	d (h10)	H	h	L (+0.2)	Material	Mould No.
P024958301	558.80	495.30	21.00	6.00	6.00	NBR/FABRIC	CWE-496
P024958302	558.80	495.80	31.00	5.00	5.00	NBR/FABRIC	CWE-548
P024808301	560.00	480.00	30.00	6.00	6.00	NBR/FABRIC	CWE-499
P023108401	570.00	310.00	30.00	10.00	10.00	NBR/FABRIC	CWE-326
P025584301	662.69	584.20	26.99	4.76	4.76	NBR/FABRIC	CWE-708
P026238401	685.00	623.00	20.50	5.00	5.00	NBR/FABRIC	CWE-505
P025588301	690.11	558.80	25.40	4.76	4.76	NBR/FABRIC	CWE-631
P026850701	762.00	685.00	31.00	6.50	6.50	NBR/FABRIC	CWE-617

Part No.	D (H11)	d (h10)	H	h	L (+0.2)	Material	Mould No.
P026738301	766.31	673.10	25.40	4.76	4.76	NBR/FABRIC	CWE-632
P0270083001	800.00	700.00	35.00	10.00	10.00	NBR/FABRIC	CWE-675
P027498401	812.80	749.30	30.00	6.50	6.50	NBR/FABRIC	CWE-353
P027628302	838.20	762.00	33.00	5.00	5.00	NBR/FABRIC	CWE-529
P027808301	914.80	780.00	63.50	6.35	6.35	NBR/FABRIC	CWE-491
P028778401	965.00	877.00	38.00	6.00	6.00	NBR/FABRIC	CWE-596
P029990901	1150.10	1012.50	51.50	12.00	12.00	NBR/FABRIC	CWE-595

Bold sizes are readily available in stock.
Other materials are available on request.

P42

Single Acting Piston V Packing

DETAILS

P42 seal is robust V-Packing seal. Though it is suitable for split piston, it is extremely suitable for medium duty to heavy duty application. The P42 seal accepts low & high pressure, vigorous conditions & also any misalignment between sealing gaps. The seal is a combination of a female adaptor centre ring & male adaptor. The centre ring is the main seal being flexible enough to retain high & low pressures. The female adaptor supports the centre ring from getting extruded against high pressures. The male adaptor helps in retaining the centre ring profile & distributing the pressure equally. Besides, P43 (1+2+1) is available with 1 extra centre ring to adjust groove height.

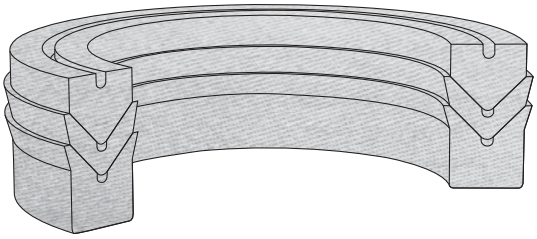

COMPATIBILITY

Mineral oils, bio oils, water soluble & water glycol fluids.

MATERIAL

Nitrile Rubber / Fabric 75/80 Shore A

APPLICATION

Medium to heavy duty single acting cylinder with split piston. Also suitable for double acting cylinders.

OPERATING CONDITIONS

Temperature Range	:	-20°C to + 100°C
Pressure	:	400 Bar
Speed	:	0.5 m/s

FEATURES

- Long life.
- Accepts misalignment & uneven surfaces.
- Any size upto 1500 mm diameter available.

SURFACE ROUGHNESS

Static	:	1.6 µmRa
Dynamic	:	0.4 µmRa

P42

Single Acting Piston V Packing

MAX SPARE LIMITED
QUALITY. PRECISION. SPEED.

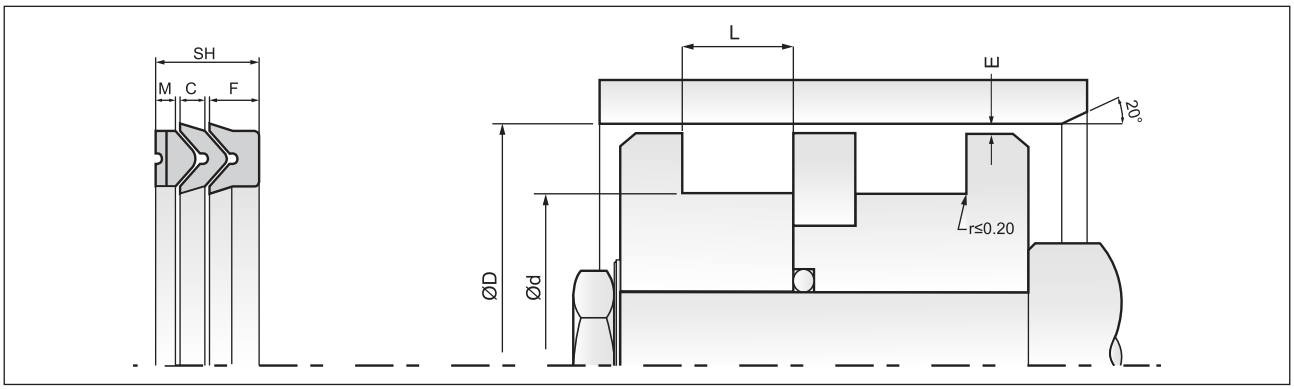

Part No.	D	d	SH (Stack Ht.)	F	C	M	Material	Mould No.
P420066501	18.00	6.50	11.50	5.75	2.87	2.87	FKM	SAT-2697
P420098301	21.03	9.92	12.70	6.34	3.17	3.17	NBR/FABRIC	SAT-2158
P420158301	25.00	15.00	8.90	4.45	2.22	2.22	NBR/FABRIC	SAT-1467
P420158301	25.00	15.00	8.90	4.45	2.22	2.22	NBR/FABRIC	SAT-2204
P420128305	25.40	12.70	9.52	5.00	2.30	2.30	NBR/FABRIC	SAT-431
P420168306	26.00	16.00	8.60	4.30	2.15	2.15	NBR/FABRIC	SAT-1461
P420128309	26.98	12.70	11.50	5.75	2.87	2.87	NBR/FABRIC	SAT-2159
P420141101	27.00	14.00	9.10	5.00	2.50	2.50	NBR	SAT-3643
P420168305	27.00	16.00	16.00	8.00	4.00	4.00	NBR/FABRIC	SAT-1080
P420158304	28.58	15.87	13.50	6.75	3.37	3.37	NBR	SAT-3497
P420188303	28.75	18.00	12.50	6.25	3.12	3.12	NBR/FABRIC	SAT-785
P420158303	30.00	15.80	19.00	9.50	4.75	4.75	NBR/FABRIC	SAT-1623
P420188304	30.00	18.00	14.00	7.00	3.50	3.50	NBR/FABRIC	SAT-2523
P420188301	30.00	18.00	20.00	10.00	5.00	5.00	NBR/FABRIC	SAT-2414
P420198304	31.75	19.05	9.52	4.76	2.38	2.38	NBR/FABRIC	SAT-662
P420160701	32.00	16.00	16.00	8.00	4.00	4.00	NBR/FABRIC	SAT-2921
P420208311	32.00	20.00	9.00	5.00	2.50	2.50	NBR/FABRIC	SAT-3189
P420208307	32.00	20.00	10.40	5.20	2.60	2.60	NBR/FABRIC	SAT-1912
P420198303	32.20	19.05	10.20	5.10	2.55	2.55	NBR/FABRIC	SAT-1234
P420258316	33.00	25.00	9.40	4.70	2.35	2.35	NBR/FABRIC	SAT-1456
P420228303	34.00	22.00	25.00	12.50	6.25	6.25	NBR/FABRIC	SAT-2353
P420208309	35.00	20.00	11.00	5.50	2.75	2.75	NBR/FABRIC	SAT-2304
P420258319	35.00	25.00	10.00	5.00	2.50	2.50	NBR/FABRIC	SAT-2453
P420288302	38.00	28.00	10.00	5.00	2.50	2.50	NBR/FABRIC	SAT-1310
P420288309	38.00	28.00	10.50	5.20	2.60	2.60	NBR/FABRIC	SAT-2452
P420288305	38.00	28.00	11.20	5.60	2.80	2.80	NBR/FABRIC	SAT-2222
P420258312	38.10	25.40	11.50	5.75	2.87	2.87	NBR/FABRIC	SAT-1172
P420251101	38.10	25.40	15.00	7.50	3.75	3.75	NBR	SAT-3715
P420208310	40.00	20.00	20.00	10.00	5.00	5.00	NBR/FABRIC	SAT-3098
P420258311	40.00	25.00	11.50	5.75	2.87	2.87	NBR/FABRIC	SAT-319
P420288303	40.00	28.00	10.50	5.20	2.60	2.60	NBR/FABRIC	SAT-2596
P420328302	40.00	32.00	6.50	3.25	1.62	1.62	NBR/FABRIC	SAT-3382
P420268301	42.00	26.00	24.00	12.00	6.00	6.00	NBR/FABRIC	SAT-4209
P420268302	42.00	26.00	25.00	12.50	6.25	6.25	NBR/FABRIC	SAT-4227
P420308301	42.00	30.00	11.00	5.50	2.75	2.75	NBR/FABRIC	SAT-1463
P420287801	42.85	28.57	23.40	11.70	5.85	5.85	NBR	SAT-2928
P420228301	43.00	22.00	22.50	11.25	5.62	5.62	NBR/FABRIC	SAT-1243
P420248301	44.00	24.00	17.00	8.50	4.25	4.25	NBR/FABRIC	SAT-1117
P420208308	44.40	20.00	20.00	10.00	5.00	5.00	NBR/FABRIC	SAT-1898
P420198305	44.45	19.05	25.40	12.70	6.35	6.35	NBR/FABRIC	SAT-3212
P42028K101	44.45	28.57	18.92	9.46	4.73	4.73	NYLON	SAT-3759
P420258318	45.00	25.00	11.00	5.50	2.75	2.75	NBR/FABRIC	SAT-2157
P420368310	45.00	36.00	15.00	7.50	3.75	3.75	NBR/FABRIC	SAT-1425
P420348401	46.00	34.00	11.90	5.95	2.97	2.97	NBR/FABRIC	SAT-1932
P420348301	46.00	34.00	12.50	6.25	3.12	3.12	NBR/FABRIC	SAT-3142
P420358307	46.00	35.00	12.00	6.00	3.00	3.00	NBR/FABRIC	SAT-2223
P42034K201	47.62	34.92	15.00	7.50	3.75	3.75	NBR/FABRIC	SAT-413
P420318301	47.80	31.80	14.00	7.00	3.50	3.50	NBR/FABRIC	SAT-1972
P420358310	48.00	35.00	20.00	10.00	5.00	5.00	NBR/FABRIC	SAT-752
P420258314	50.00	25.00	25.40	12.70	6.35	6.35	NBR/FABRIC	SAT-1364
P420328301	50.00	32.00	22.50	11.25	5.62	5.62	NBR/FABRIC	SAT-1485
P420358501	50.00	35.00	11.00	5.50	2.75	2.75	FKM/FABRIC	SAT-429

Vee pack height can be adjusted by increasing or reducing the numbers of centre rings (C). This calculation can be done by the height of 'C' shown in the table.
Bold sizes are readily available in stock.
Other materials are available on request.

P42

Single Acting Piston V Packing

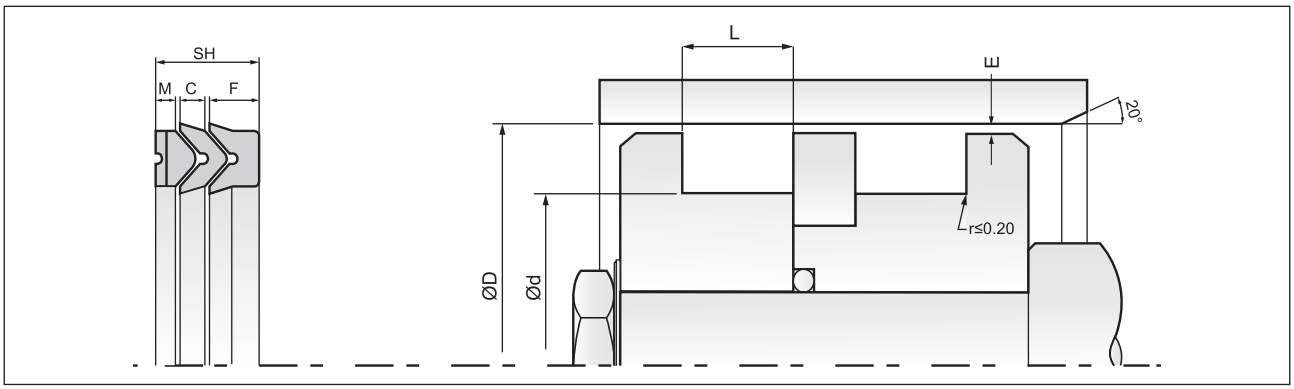

Part No.	D	d	SH (Stack Ht.)	F	C	M	Material	Mould No.
P420358313	50.00	35.00	11.50	5.75	2.87	2.87	NBR/FABRIC	SAT-2418
P420358302	50.00	35.00	18.75	9.37	4.68	4.68	NBR/FABRIC	SAT-683
P420408301	50.00	40.00	13.00	6.50	3.25	3.25	NBR/FABRIC	SAT-1457
P420408501	50.00	40.00	16.00	8.00	4.00	4.00	FKM/FABRIC	SAT-2765
P420350801	55.00	35.00	23.00	11.50	5.75	5.75	NBR/FABRIC	SAT-3907
P420458501	55.00	45.00	16.00	8.00	4.00	4.00	FKM/FABRIC	SAT-2733
P420458316	57.00	45.00	21.00	10.50	5.25	5.25	NBR/FABRIC	SAT-2606
P420448301	57.15	44.45	13.00	6.50	3.25	3.25	NBR/FABRIC	SAT-2443
P420458309	58.00	45.00	15.00	7.50	3.75	3.75	NBR/FABRIC	SAT-1007
P420458313	58.00	45.00	25.00	12.50	6.25	6.25	NBR/FABRIC	SAT-1612
P420408306	60.00	40.00	15.00	7.50	3.75	3.75	NBR/FABRIC	SAT-917
P420458302	60.00	45.00	14.82	7.40	3.70	3.70	NBR/FABRIC	SAT-2601
P420458314	60.00	45.00	22.50	11.25	5.62	5.62	NBR/FABRIC	SAT-2197
P420458312	60.00	45.00	23.50	11.75	5.87	5.87	NBR/FABRIC	SAT-1473
P420488312	61.00	48.00	13.00	6.50	3.25	3.25	NBR/FABRIC	SAT-2777
P420428301	61.89	42.06	19.05	9.50	4.75	4.75	NBR/FABRIC	SAT-2779
P420358315	62.00	35.00	28.00	14.00	7.00	7.00	NBR/FABRIC	SAT-3617
P420478401	63.00	47.00	12.80	6.40	3.20	3.20	NBR/FABRIC	SAT-4012
P420478305	63.00	47.00	18.40	9.20	4.60	4.60	NBR/FABRIC	SAT-3263
P420478304	63.00	47.70	13.50	6.75	3.37	3.37	NBR	SAT-3251
P420488302	63.00	48.00	11.70	5.85	2.92	2.92	NBR/FABRIC	SAT-2282
P420488313	63.00	48.00	11.80	5.90	2.95	2.95	NBR/FABRIC	SAT-3064
P420488307	63.00	48.00	12.00	6.00	3.00	3.00	NBR/FABRIC	SAT-1458
P420488303	63.00	48.00	12.50	6.25	3.12	3.12	NBR/FABRIC	SAT-175
P420488502	63.00	48.00	12.50	6.25	3.12	3.12	FKM/FABRIC	SAT-1182
P420487001	63.00	48.00	13.00	6.50	3.25	3.25	FKM/BFT	SAT-2522
P420488311	63.00	48.00	14.00	7.00	3.50	3.50	NBR/FABRIC	SAT-2425
P420458301	65.00	45.00	14.00	7.00	3.50	3.50	NBR	SAT-414
P420451001	65.00	45.00	16.00	8.00	4.00	4.00	NBR	SAT-3025
P420508318	65.00	50.00	14.00	7.00	3.50	3.50	NBR/FABRIC	SAT-1462
P420448401	66.67	44.45	15.87	7.93	3.96	3.96	NBR/FABRIC	SAT-3959
P420508317	66.68	50.80	11.18	5.59	2.79	2.79	NBR/FABRIC	SAT-1424
P420608507	69.85	60.33	15.24	7.93	3.81	3.81	FKM/FABRIC	SAT-1111
P420508502	70.00	50.00	14.60	7.30	3.65	3.65	FKM/FABRIC	SAT-1797
P420508322	70.00	50.00	14.80	7.40	3.70	3.70	NBR/FABRIC	SAT-2707
P420508302	70.00	50.00	30.00	15.00	7.50	7.50	NBR/FABRIC	SAT-4235
P420508315	70.00	50.00	38.00	19.00	9.50	9.50	NBR/FABRIC	SAT-1311
P420568303	70.00	56.00	20.00	10.00	5.00	5.00	NBR/FABRIC	SAT-1019
P420618301	73.81	61.91	20.50	10.25	5.12	5.12	NBR/FABRIC	SAT-2101
P420508323	75.00	50.00	12.50	6.25	3.12	3.12	NBR/FABRIC	SAT-2744
P420558303	75.00	55.00	39.50	19.75	9.87	9.87	NBR/FABRIC	SAT-159
P420608320	77.00	60.00	13.00	6.50	3.25	3.25	NBR/FABRIC	SAT-1426
P420638319	78.00	63.00	16.00	8.00	4.00	4.00	NBR/FABRIC	SAT-2831
P420638318	78.00	63.00	22.50	11.25	5.62	5.62	NBR/FABRIC	SAT-2692
P420598301	80.00	59.00	28.00	14.00	7.00	7.00	NBR/FABRIC	SAT-149
P420598303	80.00	59.75	15.10	7.55	3.77	3.77	NBR	SAT-3252
P420608315	80.00	60.00	10.00	5.00	2.50	2.50	NBR/FABRIC	SAT-1135
P420608305	80.00	60.00	14.60	7.30	3.65	3.65	NBR/FABRIC	SAT-257
P420608502	80.00	60.00	14.60	7.30	3.65	3.65	NBR/FABRIC	SAT-1181
P420608332	80.00	60.00	15.00	7.50	3.75	3.75	NBR/FABRIC	SAT-2806
P420608314	80.00	60.00	15.00	7.50	3.75	3.75	NBR/FABRIC	SAT-812
P420608338	80.00	60.00	15.20	7.60	3.80	3.80	NBR/FABRIC	SAT-182

Vee pack height can be adjusted by increasing or reducing the numbers of centre rings (C). This calculation can be done by the height of 'C' shown in the table.
Bold sizes are readily available in stock.
Other materials are available on request.

P42

Single Acting Piston V Packing

MAX SPARE LIMITED
QUALITY. PRECISION. SPEED.

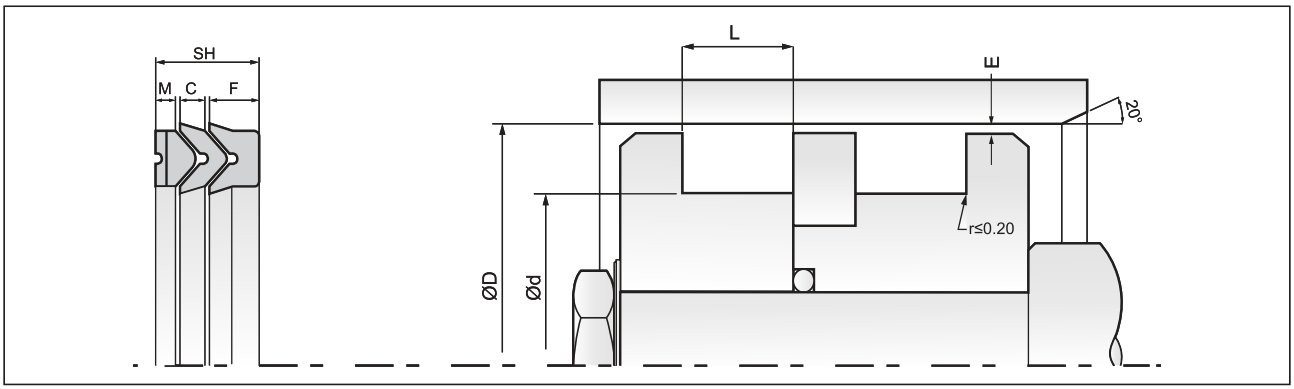

Part No.	D	d	SH (Stack Ht.)	F	C	M	Material	Mould No.
P420608334	80.00	60.00	17.00	8.50	4.25	4.25	NBR/FABRIC	SAT-3132
P420628302	80.00	62.00	22.50	11.25	5.62	5.62	NBR/FABRIC	SAT-1008
P420658301	80.00	65.00	11.00	5.50	2.75	2.75	NBR/FABRIC	SAT-1497
P420658504	80.00	65.00	12.00	6.00	3.00	3.00	FKM/FABRIC	SAT-2800
P42065D601	80.00	65.00	12.50	6.25	3.12	3.12	HNBR/FABRIC	SAT-1321
P420668601	80.00	66.00	12.50	6.25	3.12	3.12	FKM/FABRIC	SAT-4142
P420408307	82.00	40.00	21.00	10.50	5.25	5.25	NBR/FABRIC	SAT-3104
P420628303	82.00	62.00	20.00	10.00	5.00	5.00	NBR/FABRIC	SAT-3699
P420708307	83.00	70.00	16.68	8.34	4.17	4.17	NBR/FABRIC	SAT-2719
P420658304	85.00	65.00	25.50	12.70	6.35	6.35	NBR/FABRIC	SAT-2564
P420638314	88.00	63.00	15.00	7.50	3.75	3.75	NBR/FABRIC	SAT-309
P420708301	90.00	70.00	15.00	7.50	3.75	3.75	NBR/FABRIC	SAT-1993
P420658305	93.00	65.00	27.00	13.50	6.75	6.75	NBR/FABRIC	SAT-3258
P420468401	95.30	46.20	40.00	20.00	10.00	10.00	NBR/FABRIC	SAT-4124
P420768301	100.00	76.00	18.00	9.00	4.50	4.50	NBR/FABRIC	SAT-2828
P420808517	100.00	80.00	12.00	6.00	3.00	3.00	FKM/FABRIC	SAT-2714
P420808339	100.00	80.00	12.50	6.25	3.12	3.12	NBR/FABRIC	SAT-4356
P420808317	100.00	80.00	21.00	10.50	5.25	5.25	NBR/FABRIC	SAT-1368
P420808330	100.00	80.00	21.67	10.83	5.41	5.41	NBR/FABRIC	SAT-2773
P420808321	100.00	80.00	25.00	12.50	6.25	6.25	NBR/FABRIC	SAT-302
P420828306	100.00	82.00	14.00	7.00	3.50	3.50	NBR/FABRIC	SAT-1764
P420858302	100.00	85.00	22.00	11.00	5.50	5.50	NBR/FABRIC	SAT-2706
P420788301	101.60	78.00	21.20	10.60	5.30	5.30	NBR/FABRIC	SBT-2032
P420798501	101.60	79.37	22.22	11.11	5.55	5.55	FKM/FABRIC	SBT-1054
P420808511	101.60	80.00	23.00	11.50	5.75	5.75	FKM/FABRIC	SBT-977
P420888301	101.60	88.90	13.00	6.50	3.25	3.25	NBR/FABRIC	SBT-1952
P420828308	103.50	82.50	21.00	10.50	5.25	5.25	NBR/FABRIC	SBT-2729
P420858303	105.00	85.00	15.00	7.50	3.75	3.75	NBR/FABRIC	SBT-1981
P420908311	105.00	90.00	21.00	10.50	5.25	5.25	NBR/FABRIC	SBT-1768
P420828307	107.95	82.55	28.57	14.28	7.14	7.14	NBR/FABRIC	SBT-1946
P420708304	120.00	70.00	40.00	20.00	10.00	10.00	NBR/FABRIC	SBT-1146
P421008320	120.00	100.00	12.50	6.25	3.12	3.12	NBR/FABRIC	SBT-960
P421008328	120.00	100.00	15.00	7.50	3.75	3.75	NBR/FABRIC	SBT-657
P421008335	120.00	100.00	28.00	14.00	7.00	7.00	NBR/FABRIC	SBT-3028
P420908301	125.00	99.60	25.40	12.70	6.35	6.35	NBR/FABRIC	SBT-2442
P421008325	125.00	100.00	21.00	10.50	5.25	5.25	NBR/FABRIC	SBT-1854
P421008501	125.00	100.00	25.80	12.90	6.45	6.45	NBR/FABRIC	SBT-967
P421058401	125.00	105.00	17.00	8.50	4.25	4.25	NBR/FABRIC	SBT-3217
P421108401	125.00	110.00	22.00	11.00	5.50	5.50	NBR	SBT-3182
P421008327	126.00	100.00	25.00	12.50	6.25	6.25	NBR/FABRIC	SBT-1897
P420888302	127.00	88.90	38.10	19.05	9.52	9.52	NBR/FABRIC	SBT-3068
P421018304	127.00	101.60	23.50	11.75	5.87	5.87	NBR/FABRIC	SBT-1787
P421148301	127.00	114.00	25.00	12.50	6.25	6.25	NBR	SBT-2196
P421028601	127.20	102.20	26.00	13.00	6.50	6.50	FKM/FABRIC	SBT-3097
P421008332	129.50	100.00	32.50	16.25	8.12	8.12	NBR/FABRIC	SBT-2511
P421108315	134.00	110.00	12.00	7.00	2.40	1.70	NBR/FABRIC	SBT-2059
P421068301	135.00	106.00	22.00	11.00	5.50	5.50	NBR/FABRIC	SBT-2030
P421128301	138.00	112.00	21.50	10.75	5.37	5.37	NBR/FABRIC	SBT-2453
P421008330	140.00	100.00	25.00	12.50	6.25	6.25	FKM/FABRIC	SBT-1466
P421108306	140.00	110.00	20.00	10.00	5.00	5.00	NBR/FABRIC	SBT-2643
P421208310	140.00	120.00	25.00	12.50	6.25	6.25	NBR/FABRIC	SBT-1974
P421258309	142.50	125.00	20.00	10.00	5.00	5.00	NBR/FABRIC	SBT-3170

Vee pack height can be adjusted by increasing or reducing the numbers of centre rings (C). This calculation can be done by the height of 'C' shown in the table.
Bold sizes are readily available in stock.
Other materials are available on request.

P42

Single Acting Piston V Packing

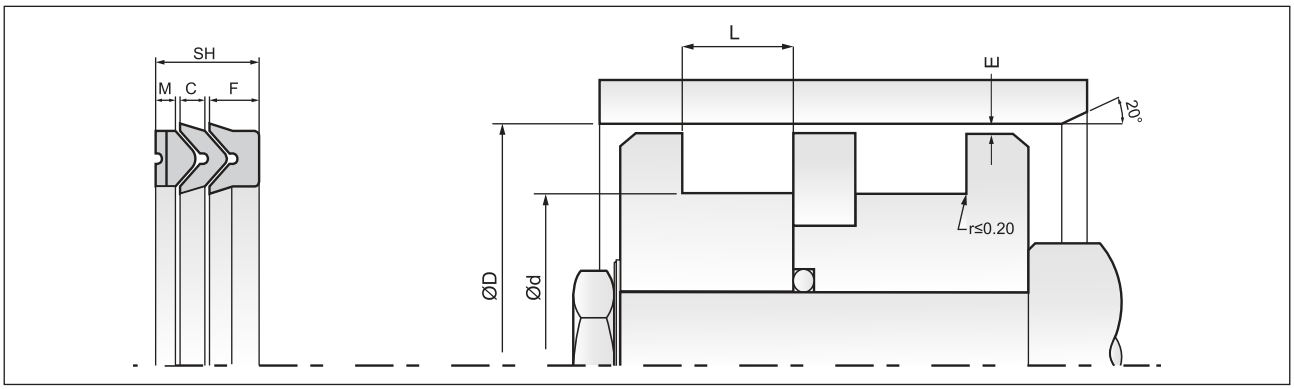

Part No.	D	d	SH (Stack Ht.)	F	C	M	Material	Mould No.
P421208308	145.00	120.00	26.30	13.15	6.57	6.57	NBR/FABRIC	SBT-1436
P421208306	150.00	120.00	40.00	20.00	10.00	10.00	NBR/FABRIC	SBT-749
P421258308	152.40	125.00	23.00	11.50	5.75	5.75	NBR/FABRIC	SBT-3096
P421308509	160.00	130.00	18.50	9.25	4.62	4.62	FKM/FABRIC	SBT-2154
P421308511	160.00	130.00	26.00	13.00	6.50	6.50	FKM/FABRIC	SBT-2255
P421306701	160.00	130.00	28.00	14.00	7.00	7.00	FKM	SBT-3017
P421308301	160.00	130.00	29.00	11.60	5.28	5.28	NBR/FABRIC	SBT-2169
P421352101	160.00	135.00	16.70	8.34	4.17	4.17	CR/FABRIC	SBT-1123
P421408502	160.00	140.00	29.00	14.50	7.25	7.25	NBR/FABRIC	SBT-1754
P421408305	165.00	140.00	22.00	11.00	5.50	5.50	NBR/FABRIC	SBT-2363
P421358401	166.00	135.00	20.00	10.00	5.00	5.00	NBR/FABRIC	SBT-2980
P421498301	180.00	149.00	25.00	12.50	6.25	6.25	NBR/FABRIC	SBT-2129
P421508314	180.00	150.00	23.80	11.90	5.95	5.95	NBR/FABRIC	SBT-1997
P421508315	180.00	150.00	30.50	15.25	7.62	7.62	FKM	SBT-2052
P421608303	180.00	160.00	25.00	12.50	6.25	6.25	NBR/FABRIC	SBT-2306
P421558301	182.00	155.00	22.00	11.00	5.50	5.50	NBR/FABRIC	SBT-1944
P421608501	186.00	160.00	29.00	14.50	7.25	7.25	FKM/FABRIC	SBT-1661
P421608301	190.00	160.00	24.00	12.00	6.00	6.00	NBR/FABRIC	SBT-1939
P421708504	200.00	170.00	32.50	16.25	8.12	8.12	FKM	SBT-2922
P421708502	200.00	170.00	33.50	16.75	8.37	8.37	FKM/FABRIC	SBT-1748
P421708508	200.00	170.00	37.50	18.75	9.37	9.37	FKM/FABRIC	SBT-2212
P421708319	200.00	170.00	48.00	24.00	12.00	12.00	NBR/FABRIC	SBT-1341
P421708326	204.00	170.00	15.00	7.50	3.75	3.75	NBR/FABRIC	SBT-2436
P421708321	204.00	170.00	28.50	14.25	7.12	7.12	NBR/FABRIC	SBT-1643
P421908501	220.00	190.00	33.60	16.80	8.40	8.40	FKM/FABRIC	SBT-1923
P422008307	220.00	200.00	23.80	11.90	5.95	5.95	NBR/FABRIC	SBT-3003
P421958303	225.00	195.00	35.00	17.50	8.75	8.75	NBR/FABRIC	SBT-127
P422208307	245.00	220.00	45.00	22.50	11.25	11.25	NBR/FABRIC	SBT-1316
P422218501	245.00	221.00	30.00	15.00	7.50	7.50	FKM/FABRIC	SBT-1943
P422168301	250.00	216.00	52.00	26.00	13.00	13.00	NBR/FABRIC	SBT-1903
P422188301	250.00	218.00	21.20	10.60	5.30	5.30	NBR/FABRIC	SBT-1836
P422208501	250.00	220.00	32.50	16.25	8.12	8.12	FKM/FABRIC	SBT-134
P422208309	250.00	220.00	33.50	16.75	8.37	8.37	NBR/FABRIC	SBT-1790
P422208505	250.00	220.00	37.50	18.75	9.37	9.37	FKM/FABRIC	SBT-1800
P422108301	254.00	210.00	35.09	17.54	8.77	8.77	NBR/FABRIC	SBT-1218
P422218301	254.00	221.00	20.00	10.00	5.00	5.00	NBR/FABRIC	SBT-2303
P422248301	254.00	224.00	32.00	16.00	8.00	8.00	NBR/FABRIC	SBT-2617
P422308301	260.00	230.00	33.50	16.75	8.37	8.37	NBR/FABRIC	SBT-952
P422308302	260.00	230.00	37.00	18.50	9.25	9.25	NBR/FABRIC	SBT-2452
P422418301	273.05	241.30	28.60	14.30	7.15	7.15	NBR/FABRIC	SBT-1591
P422498501	280.00	249.50	33.50	16.75	8.37	8.37	FKM/FABRIC	SBT-3094
P422508505	280.00	250.00	35.00	17.50	8.75	8.75	FKM/FABRIC	SBT-1329
P422518301	282.00	251.00	34.00	17.00	8.50	8.50	NBR/FABRIC	SBT-1559
P422678301	288.00	267.00	20.00	10.00	5.00	5.00	NBR/FABRIC	SBT-2043
P422688301	298.45	268.29	45.24	22.62	11.31	11.31	NBR/FABRIC	SBT-2564
P422708305	300.00	270.00	32.50	16.25	8.12	8.12	NBR/FABRIC	SBT-2611
P422708301	300.00	270.00	33.00	16.50	8.25	8.25	NBR/FABRIC	SBT-1368
P422748301	300.00	274.50	31.50	15.75	7.87	7.87	NBR/FABRIC	SBT-1900
P422758301	300.00	275.00	32.50	16.25	8.12	8.12	NBR/FABRIC	SBT-1953
P422668302	304.80	266.70	15.88	7.94	3.97	3.97	NBR/FABRIC	SCT-576
P422848301	304.80	284.00	33.40	16.70	8.35	8.35	NBR/FABRIC	SCT-704
P422808504	320.00	280.00	41.50	20.75	10.37	10.37	FKM/FABRIC	SCT-291

Vee pack height can be adjusted by increasing or reducing the numbers of centre rings (C). This calculation can be done by the height of 'C' shown in the table.
Bold sizes are readily available in stock.
Other materials are available on request.

P42

Single Acting Piston V Packing

MAX SPARE LIMITED
QUALITY. PRECISION. SPEED.

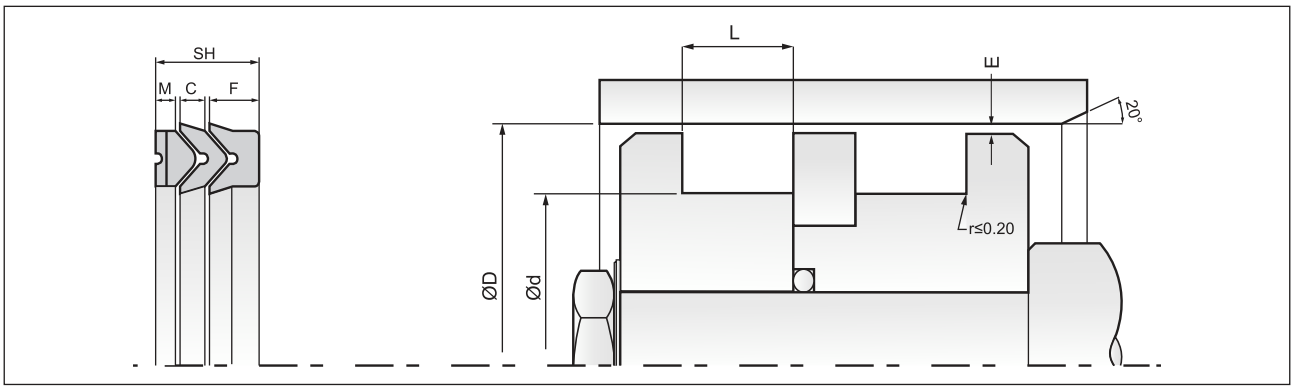

Part No.	D	d	SH (Stack Ht.)	F	C	M	Material	Mould No.
P422908602	320.70	290.00	51.00	25.50	12.75	12.75	FKM/FABRIC	SCT-1190
P422908604	320.80	290.00	21.00	10.50	5.25	5.25	FKM/FABRIC	SCT-1192
P422908603	321.00	290.00	43.50	21.75	10.87	10.87	FKM/FABRIC	SCT-1191
P423008306	327.00	300.00	35.50	17.75	8.87	8.87	NBR/FABRIC	SCT-599
P422958301	330.00	295.00	31.00	15.50	7.75	7.75	NBR/FABRIC	SCT-827
P423008309	330.00	300.00	25.00	12.50	6.25	6.25	NBR/FABRIC	SCT-1050
P422908309	335.00	290.00	30.00	15.00	7.50	7.50	NBR/FABRIC	SCT-1069
P423008308	335.00	300.00	25.00	12.50	6.25	6.25	NBR/FABRIC	SCT-1007
P423008305	340.00	300.00	51.80	25.90	12.95	12.95	NBR/FABRIC	SCT-484
P423048302	340.00	304.00	30.00	15.00	7.50	7.50	NBR/FABRIC	SCT-935
P423108301	350.00	310.00	40.00	20.00	10.00	10.00	NBR/FABRIC	SCT-748
P4232008501	350.00	320.00	35.00	17.50	8.75	8.75	FKM/FABRIC	SCT-570
P423158301	355.60	315.60	40.00	20.00	10.00	10.00	NBR/FABRIC	SCT-778
P4232008502	360.00	320.00	51.80	25.90	12.95	12.95	FKM/FABRIC	SCT-755
P423368301	360.00	336.00	24.00	12.00	6.00	6.00	NBR/FABRIC	SCT-1024
P423608303	392.00	360.00	44.00	22.00	11.00	11.00	NBR/FABRIC	SCT-871
P423608301	393.00	360.00	38.00	19.00	9.50	9.50	NBR/FABRIC	SCT-571
P423708302	415.00	370.00	40.00	20.00	10.00	10.00	NBR/FABRIC	SCT-712
P424198401	457.20	419.10	30.00	15.00	7.50	7.50	NBR/FABRIC	SCT-1089
P424808401	520.00	480.00	40.30	20.00	10.00	10.00	NBR/FABRIC	SCT-1208
P425608301	602.00	560.00	44.00	22.00	11.00	11.00	NBR/FABRIC	SCT-477
P426108401	650.00	610.00	40.00	20.00	10.00	10.00	NBR/FABRIC	SCT-1203
P426008301	655.00	600.00	50.00	25.00	12.50	12.50	NBR/FABRIC	SCT-572

Vee pack height can be adjusted by increasing or reducing the numbers of centre rings (C). This calculation can be done by the height of 'C' shown in the table.
Bold sizes are readily available in stock.
Other materials are available on request.

P43

Single Acting Piston V Packing

DETAILS

P43 seal is robust V-Packing seal. Though it is suitable for split piston it is extremely suitable for medium duty to heavy duty application. The P43 seal accepts low & high pressure, vigorous conditions & also any misalignment between sealing gaps. The seal is a combination of a female adaptor centre ring & male adaptor. The centre ring is the main seal being flexible enough to retain high & low pressures. The female adaptor supports the centre ring from getting extruded against high pressures. The male adaptor helps in retaining the centre ring profile & distributing the pressure equally.

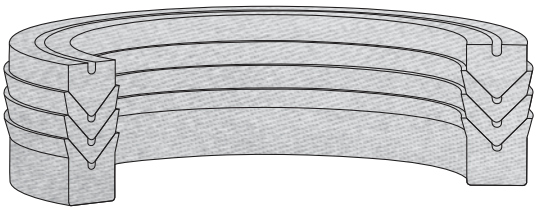

COMPATIBILITY

Mineral oils, bio oils, water soluble & water glycol fluids.

MATERIAL

Nitrile Rubber / Fabric 75/80 Shore A

APPLICATION

Medium to heavy duty single acting cylinder with split piston. Also suitable for double acting cylinders.

OPERATING CONDITIONS

Temperature Range	:	-20°C to + 100°C
Pressure	:	400 Bar
Speed	:	0.5 m/s

FEATURES

- Long life.
- Accepts misalignment & uneven surfaces.
- Any size upto 1500 mm diameter available.

SURFACE ROUGHNESS

Static	:	1.6 µmRa
Dynamic	:	0.4 µmRa

P43

Single Acting Piston V Packing

MAX SPARE LIMITED
QUALITY. PRECISION. SPEED.

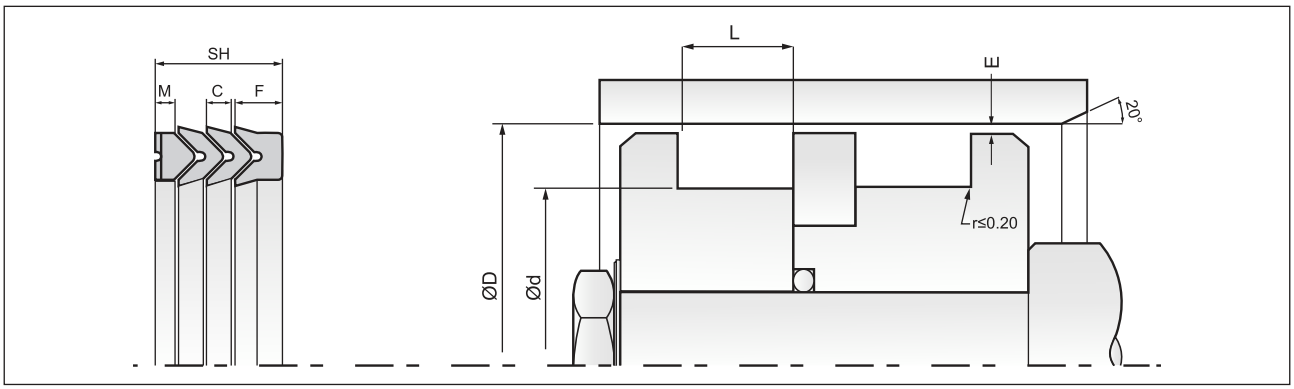

Part No.	D	d	SH (Stack Ht.)	F	C	M	Material	Mould No.
P430068301	16.00	6.00	12.00	4.80	2.40	2.40	NBR/FABRIC	SAT-3162
P430108301	18.00	10.00	15.00	6.00	3.00	3.00	NBR/FABRIC	SAT-1848
P430128301	20.63	12.70	14.20	5.68	2.84	2.84	NBR/FABRIC	SAT-3695
P430128302	23.81	12.70	14.20	5.68	2.84	2.84	NBR/FABRIC	SAT-3696
P430152102	25.40	15.87	16.00	6.40	3.20	3.20	CR/FABRIC	SAT-1839
P430108302	26.00	10.00	16.00	6.40	3.20	3.20	NBR/FABRIC	SAT-2298
P430168304	26.00	16.00	12.80	5.12	2.56	2.56	NBR/FABRIC	SAT-1731
P430188501	29.00	18.00	13.00	5.20	2.60	2.60	FKM/FABRIC	SAT-2608
P430188301	30.00	18.00	20.00	8.00	4.00	4.00	NBR/FABRIC	SAT-1849
P43022L501	35.00	22.00	14.37	5.74	2.87	2.87	PU	PPA-2365
P430258311	36.00	25.00	16.00	6.40	3.20	3.20	NBR/FABRIC	SAT-2716
P430258312	36.00	25.00	17.00	6.80	3.40	3.40	NBR/FABRIC	SAT-2641
P430258315	36.80	25.00	16.00	6.40	3.20	3.20	NBR/FABRIC	SAT-2696
P430258501	37.50	25.00	15.50	6.20	3.10	3.10	FKM/FABRIC	SAT-4257
P43058317	38.00	25.00	22.00	8.80	4.40	4.40	NBR/FABRIC	SAT-146
P430303301	38.00	30.00	20.00	8.00	4.00	4.00	EPDM/FABRIC	SAT-3390
P430286701	39.00	28.00	13.00	5.20	2.60	2.60	FKM/FABRIC	SAT-2613
P430228307	40.00	22.00	24.50	9.80	4.90	4.90	NBR/FABRIC	SAT-3845
P430258302	40.00	25.00	16.54	6.60	3.30	3.30	NBR/FABRIC	SAT-2553
P430303302	40.00	30.00	20.00	8.00	4.00	4.00	EPDM/FABRIC	SAT-3616
P430228303	41.00	22.00	25.00	10.00	5.00	5.00	NBR/FABRIC	SAT-1235
P430288501	41.27	28.57	16.25	6.50	3.25	3.25	FKM/FABRIC	SAT-2127
P430228306	42.00	22.00	27.00	10.80	5.40	5.40	NBR/FABRIC	SAT-3084
P430288310	42.00	28.00	22.00	8.80	4.40	4.40	NBR/FABRIC	SAT-197
P430288313	43.00	28.00	21.00	8.40	4.20	4.20	NBR/FABRIC	SAT-3123
P43030M101	43.00	30.00	22.58	9.00	4.50	4.50	HNBR/FABRIC	SAT-3489
P43030S401	43.00	30.00	22.58	9.00	4.50	4.50	HNBR/FABRIC	SAT-3996
P430318501	44.45	31.75	16.28	6.50	3.25	3.25	FKM/FABRIC	SAT-2138
P430308305	45.00	30.00	25.50	10.20	5.10	5.10	NBR/FABRIC	SAT-2599
P430328302	45.00	32.00	18.50	7.40	3.70	3.70	NBR/FABRIC	SAT-2784
P430358313	48.00	35.00	22.00	8.80	4.40	4.40	NBR/FABRIC	SAT-2675
P430358320	48.00	35.00	32.00	12.80	6.40	6.40	NBR/FABRIC	SAT-3379
P43036D601	48.00	36.00	24.00	9.60	4.80	4.80	HNBR/FABRIC	SAT-144
P430308304	50.00	30.00	24.48	9.80	4.90	4.90	NBR/FABRIC	SAT-2280
P430308502	50.00	30.00	25.00	10.00	5.00	5.00	FKM/FABRIC	SAT-2986
P430358302	50.00	35.00	14.00	5.60	2.80	2.80	NBR/FABRIC	SAT-2655
P430368309	50.00	36.00	22.50	9.00	4.50	4.50	NBR/FABRIC	SAT-747
P430428301	50.00	42.00	8.50	3.40	1.70	1.70	NBR/FABRIC	SAT-1941
P430348305	50.80	34.92	22.00	8.80	4.40	4.40	NBR/FABRIC	SAT-861
P430358321	51.00	35.00	16.00	6.40	3.20	3.20	NBR/FABRIC	SAT-3397
P430358312	51.00	35.00	20.00	8.00	4.00	4.00	NBR/FABRIC	SAT-2456
P430358314	52.00	35.00	25.00	10.00	5.00	5.00	NBR/FABRIC	SAT-196
P430408307	52.00	40.00	20.00	8.00	4.00	4.00	NBR/FABRIC	SAT-2407
P430378302	53.00	37.00	29.00	11.60	5.80	5.80	NBR/FABRIC	SAT-291
P430398301	53.00	39.00	17.50	7.00	3.50	3.50	NBR/FABRIC	SAT-2808
P43040S401	53.00	40.00	22.58	9.00	4.50	4.50	HNBR/FABRIC	SAT-3997
P430352101	54.00	35.00	24.70	9.88	4.94	4.94	CR/FABRIC	SAT-3848
P430428501	54.00	42.00	16.50	6.60	3.30	3.30	FKM/FABRIC	SAT-3534
P430408502	55.00	40.00	19.50	7.80	3.90	3.90	FKM/FABRIC	SAT-2569
P430408309	56.00	40.00	15.00	6.00	3.00	3.00	NBR/FABRIC	SAT-2849
P430408310	56.00	40.00	24.00	9.60	4.80	4.80	NBR/FABRIC	SAT-2901
P430408306	56.00	40.00	27.00	10.80	5.40	5.40	NBR/FABRIC	SAT-188

Vee pack height can be adjusted by increasing or reducing the numbers of centre rings (C). This calculation can be done by the height of 'C' shown in the table.
Bold sizes are readily available in stock.
Other materials are available on request.

P43

Single Acting Piston V Packing

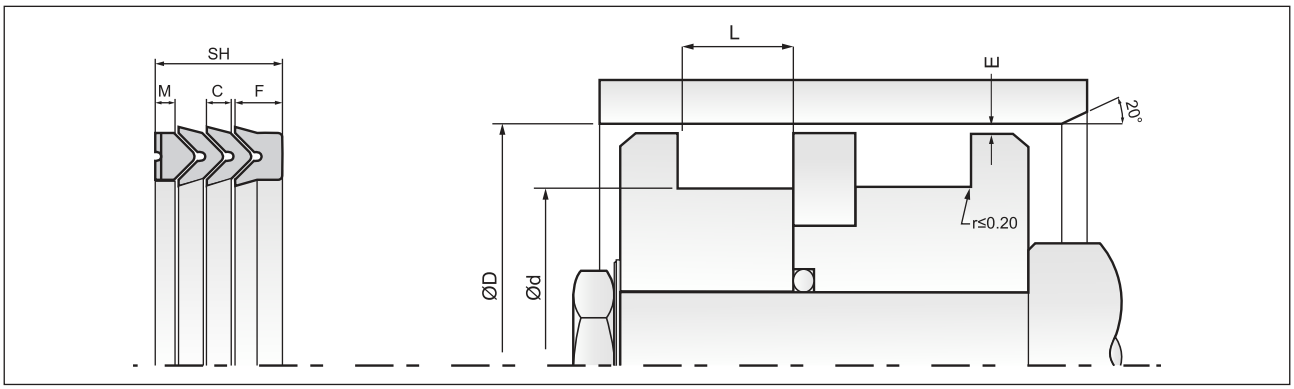

Part No.	D	d	SH (Stack Ht.)	F	C	M	Material	Mould No.
P430458317	57.00	45.00	20.00	8.00	4.00	4.00	NBR/FABRIC	SAT-1981
P430284801	57.15	28.57	25.40	10.20	5.10	5.10	HNBR/FABRIC	SAT-4221
P430318401	57.15	31.75	26.16	10.46	5.23	5.23	NBR/FABRIC	SAT-4090
P430388303	57.15	38.10	25.40	10.20	5.10	5.10	NBR/FABRIC	SAT-3988
P430448401	57.53	44.45	16.25	6.50	3.25	3.25	NBR/FABRIC	SAT-4011
P43045S401	58.00	45.00	22.58	9.00	4.50	4.50	HNBR/FABRIC	SAT-3998
P43040K202	60.00	40.00	22.50	9.00	4.50	4.50	PU	PPA-3310
P430458402	60.00	45.00	20.00	8.00	4.00	4.00	NBR/FABRIC	SAT-4358
P430458326	60.00	45.00	22.50	9.00	4.50	4.50	NBR/FABRIC	SAT-3970
P430458321	60.00	45.00	25.00	10.00	5.00	5.00	NBR/FABRIC	SAT-2661
P430458401	61.00	45.00	17.60	7.00	3.50	3.50	NBR/FABRIC	SAT-4129
P430446401	61.11	44.45	15.78	6.31	3.15	3.15	FKM/FABRIC	SAT-2950
P430488302	63.00	48.00	17.50	7.00	3.50	3.50	NBR/FABRIC	SAT-2365
P430508302	63.00	50.00	16.25	6.50	3.25	3.25	NBR/FABRIC	SAT-1319
P43050S401	63.00	50.00	22.58	9.00	4.50	4.50	HNBR/FABRIC	SAT-3999
P430503302	63.50	50.80	25.40	10.20	5.10	5.10	EPDM/FABRIC	SAT-2308
P43050K101	63.88	50.80	16.25	6.50	3.25	3.25	NBR/FABRIC	SAT-4031
P430351101	65.00	35.00	39.50	15.80	7.90	7.90	NBR/FABRIC	SAT-1967
P43035A601	65.00	35.00	40.00	16.00	8.00	8.00	NBR/FABRIC	SAT-4166
P430458322	65.00	45.00	22.50	9.00	4.50	4.50	NBR/FABRIC	SAT-2664
P430458314	65.00	45.00	23.34	9.33	4.66	4.66	NBR/FABRIC	SAT-1472
P430458327	65.00	45.00	25.00	10.00	5.00	5.00	NBR/FABRIC	SAT-4222
P430508501	65.00	50.00	22.50	9.00	4.50	4.50	FKM/FABRIC	SAT-1798
P430508306	66.00	50.00	28.00	11.20	5.60	5.60	NBR/FABRIC	SAT-1574
P43055S401	68.00	55.00	22.58	9.00	4.50	4.50	HNBR/FABRIC	SAT-4000
P430578502	69.85	57.15	16.28	6.50	3.25	3.25	FKM/FABRIC	SAT-2125
P430458318	70.00	45.00	28.00	11.20	5.60	5.60	NBR/FABRIC	SAT-1996
P430508317	70.00	50.00	18.50	7.40	3.70	3.70	NBR/FABRIC	SAT-3164
P430508316	70.00	50.00	25.00	10.00	5.00	5.00	NBR/FABRIC	SAT-2674
P430508321	70.00	50.00	40.00	16.00	8.00	8.00	NBR/FABRIC	SAT-3955
P430546901	70.00	54.00	17.50	7.00	3.50	3.50	NBR/FABRIC	SAT-3902
P430608313	70.00	60.00	13.00	5.20	2.60	2.60	NBR/FABRIC	SAT-2622
P430568309	71.00	56.00	16.50	6.60	3.30	3.30	NBR/FABRIC	SAT-2663
P430568306	71.00	56.00	23.00	9.20	4.60	4.60	NBR/FABRIC	SAT-1312
P430551001	75.00	55.00	26.00	10.40	5.20	5.20	NBR	SAT-3228
P43056K201	75.00	56.00	24.00	9.60	4.80	4.80	NBR/FABRIC	SAT-1052
P430638302	75.50	63.50	16.00	6.40	3.20	3.20	NBR/FABRIC	SAT-1479
P430558310	76.00	55.00	20.00	8.00	4.00	4.00	NBR/FABRIC	SAT-3900
P430568502	76.00	56.00	17.00	6.80	3.40	3.40	FKM/FABRIC	SAT-2568
P430568501	76.00	56.00	25.00	10.00	5.00	5.00	FKM/FABRIC	SAT-2570
P430578501	76.20	57.15	28.58	11.40	5.70	5.70	FKM/FABRIC	SAT-1883
P430638322	76.20	63.50	25.00	10.00	5.00	5.00	NBR/FABRIC	SAT-3041
P430628401	76.70	62.23	16.25	6.50	3.25	3.25	NBR/FABRIC	SAT-4293
P430608322	78.00	60.00	26.00	10.40	5.20	5.20	NBR/FABRIC	SAT-3846
P430638324	78.00	63.00	17.00	6.80	3.40	3.40	NBR/FABRIC	SAT-3472
P430638323	79.40	63.00	20.00	8.00	4.00	4.00	NBR/FABRIC	SAT-2323
P430508315	80.00	50.00	30.00	12.00	6.00	6.00	NBR/FABRIC	SAT-2611
P430568311	80.00	56.00	33.00	13.20	6.60	6.60	NBR/FABRIC	SAT-187
P430608502	80.00	60.00	15.20	6.00	3.00	3.00	FKM/FABRIC	SAT-1569
P430606601	80.00	60.00	15.20	6.00	3.00	3.00	FKM	SAT-4028
P430608310	80.00	60.00	15.50	6.20	3.10	3.10	NBR/FABRIC	SAT-1874
P430608305	80.00	60.00	25.00	10.00	5.00	5.00	NBR/FABRIC	SAT-199

Vee pack height can be adjusted by increasing or reducing the numbers of centre rings (C). This calculation can be done by the height of 'C' shown in the table.
Bold sizes are readily available in stock.
Other materials are available on request.

P43

Single Acting Piston V Packing

MAX SPARE LIMITED
QUALITY. PRECISION. SPEED.

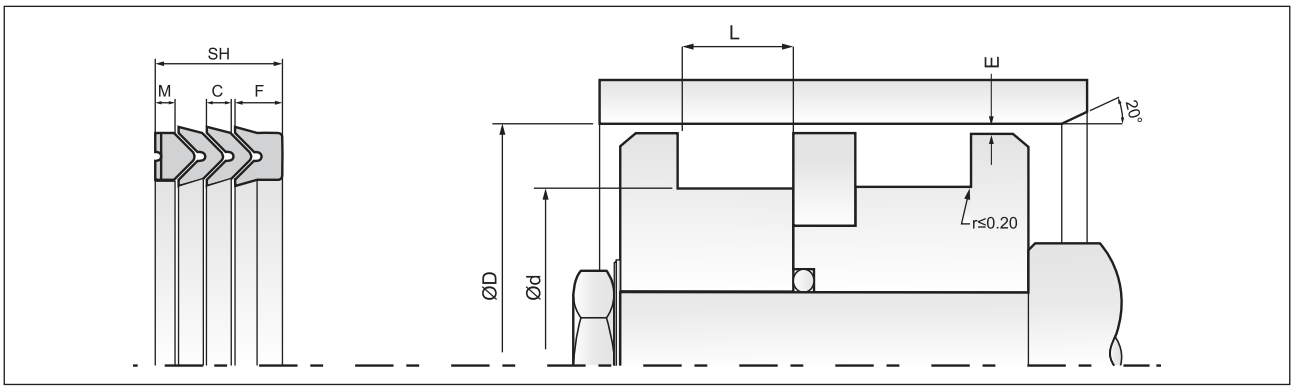

Part No.	D	d	SH (Stack Ht.)	F	C	M	Material	Mould No.
P430607801	80.00	60.00	28.00	11.20	5.60	5.60	NBR/FABRIC	SAT-1074
P430658502	80.00	65.00	16.70	6.68	3.34	3.34	FKM/FABRIC	SAT-3533
P430658303	80.00	65.00	21.70	8.68	4.34	4.34	NBR/FABRIC	SAT-1891
P430628301	82.00	62.00	40.00	16.00	8.00	8.00	NBR/FABRIC	SAT-1516
P430508304	82.55	50.80	35.30	14.20	7.10	7.10	NBR/FABRIC	SAT-2460
P43057K601	82.55	57.15	34.90	13.96	6.98	6.98	FKM/FABRIC	SAT-3160
P430608320	85.00	60.00	30.00	12.00	6.00	6.00	NBR/FABRIC	SAT-3048
P430708314	85.00	70.00	13.00	5.20	2.60	2.60	NBR/FABRIC	SAT-2480
P430708310	85.00	70.00	13.40	5.36	2.68	2.68	NBR/FABRIC	SAT-1453
P430708317	85.00	70.00	16.50	6.60	3.30	3.30	NBR/FABRIC	SAT-2660
P430668302	85.72	66.67	23.80	9.52	4.76	4.76	NBR/FABRIC	SAT-1103
P430708312	87.00	70.00	13.40	5.36	2.68	2.68	NBR/FABRIC	SAT-1755
P430697701	88.90	69.85	28.80	11.52	5.76	5.76	FKM/FABRIC	SAT-2268
P430768303	88.90	76.20	26.00	10.40	5.20	5.20	NBR/FABRIC	SAT-3036
P430768305	88.90	76.20	32.00	12.80	6.40	6.40	NBR/FABRIC	SAT-336
P430768304	88.90	76.20	32.00	12.80	6.40	6.40	NBR/FABRIC	SAT-1664
P430768401	89.40	76.20	16.25	6.50	3.25	3.25	NBR/FABRIC	SAT-4109
P430708511	90.00	70.00	22.00	8.80	4.40	4.40	FKM/FABRIC	SAT-2715
P430708504	90.00	70.00	25.00	10.00	5.00	5.00	FKM/FABRIC	SAT-1706
P430708320	90.00	70.00	35.00	14.00	7.00	7.00	NBR/FABRIC	SAT-3577
P430708318	91.00	70.00	26.50	10.60	5.30	5.30	NBR/FABRIC	SAT-3116
P43070K202	91.00	70.00	28.00	11.20	5.60	5.60	NBR/FABRIC	SAT-969
P430798501	92.07	79.37	14.24	5.69	2.84	2.84	FKM/FABRIC	SAT-3135
P430798502	92.07	79.37	16.28	6.50	3.25	3.25	FKM/FABRIC	SAT-3141
P430798505	92.07	79.37	17.65	7.00	3.50	3.50	FKM/FABRIC	SAT-3917
P430756601	94.00	75.00	25.00	10.00	5.00	5.00	FKM	SAT-3765
P430708323	95.00	70.00	32.00	12.80	6.40	6.40	NBR/FABRIC	SAT-2102
P430758302	95.00	75.00	25.00	10.00	5.00	5.00	NBR/FABRIC	SAT-3396
P430808323	95.00	80.00	16.50	6.60	3.30	3.30	NBR/FABRIC	SAT-2662
P430578305	95.25	57.15	49.21	19.68	9.84	9.84	NBR/FABRIC	SAT-3450
P430768302	98.00	76.00	24.00	9.60	4.80	4.80	NBR/FABRIC	SAT-185
P430798503	98.42	79.37	30.22	12.00	6.00	6.00	FKM/FABRIC	SAT-3183
P430508301	100.00	50.00	37.00	14.80	7.40	7.40	NBR/FABRIC	SAT-1165
P430808509	100.00	80.00	20.60	8.24	4.12	4.12	FKM/FABRIC	SAT-930
P430808505	100.00	80.00	21.00	8.40	4.20	4.20	FKM/FABRIC	SAT-1794
P430808310	100.00	80.00	30.00	12.00	6.00	6.00	NBR/FABRIC	SAT-2811
P430858501	100.00	85.00	22.50	9.00	4.50	4.50	FKM/FABRIC	SAT-3325
P430858301	100.00	85.00	25.00	10.00	5.00	5.00	NBR/FABRIC	SAT-2943
P430888311	101.60	88.90	14.17	5.66	2.83	2.83	NBR/FABRIC	SBT-1779
P43088K101	102.10	88.90	16.25	6.50	3.25	3.25	NBR/FABRIC	SBT-3010
P430798301	104.77	79.37	28.57	11.40	5.70	5.70	NBR/FABRIC	SBT-1202
P430808329	105.00	80.00	27.00	10.80	5.40	5.40	NBR/FABRIC	SBT-2681
P430908320	105.00	90.00	22.50	9.00	4.50	4.50	NBR/FABRIC	SBT-1993
P430908319	105.00	90.00	25.00	10.00	5.00	5.00	NBR/FABRIC	SBT-1902
P430888401	108.45	88.90	25.40	10.20	5.10	5.10	NBR/FABRIC	SBT-2989
P430858302	110.00	85.00	32.00	12.80	6.40	6.40	NBR/FABRIC	SBT-2362
P430928501	111.12	92.07	30.22	12.00	6.00	6.00	FKM/FABRIC	SBT-2312
P430988301	114.30	98.30	21.60	8.64	4.32	4.32	NBR/FABRIC	SBT-2730
P431008325	115.00	100.00	21.09	8.40	4.20	4.20	NBR/FABRIC	SBT-843
P431018309	117.47	101.60	29.97	11.96	5.98	5.98	NBR/FABRIC	SBT-1128
P430908501	120.00	90.00	37.50	15.00	7.50	7.50	FKM/FABRIC	SBT-1751
P431008321	120.00	100.00	23.00	9.20	4.60	4.60	NBR/FABRIC	SBT-1741

Vee pack height can be adjusted by increasing or reducing the numbers of centre rings (C). This calculation can be done by the height of 'C' shown in the table.
Bold sizes are readily available in stock.
Other materials are available on request.

P43

Single Acting Piston V Packing

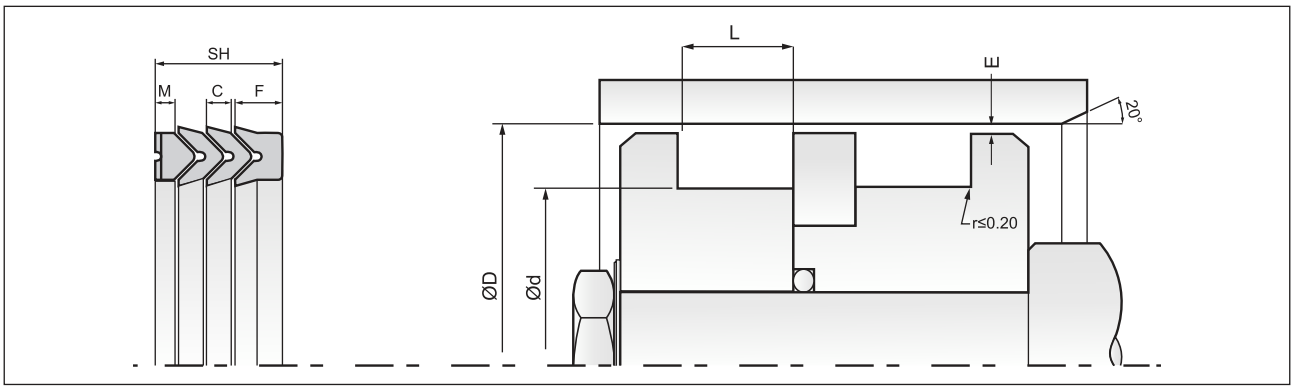

Part No.	D	d	SH (Stack Ht.)	F	C	M	Material	Mould No.
P431008516	125.00	100.00	25.50	10.20	5.10	5.10	FKM/FABRIC	SBT-2454
P43100K101	125.00	100.00	30.00	12.00	6.00	6.00	NYLON	PPA-3018
P431008323	125.00	100.00	34.00	13.60	6.80	6.80	NBR/FABRIC	SBT-1210
P431038302	125.00	103.00	26.30	10.52	5.26	5.26	NBR/FABRIC	SBT-1213
P431008509	127.00	100.00	32.00	12.80	6.40	6.40	FKM/FABRIC	SBT-1399
P431038301	130.00	103.00	17.00	6.80	3.40	3.40	NBR/FABRIC	SBT-1157
P431018308	133.35	101.60	38.00	15.20	7.60	7.60	NBR/FABRIC	SBT-1087
P431108318	135.00	110.00	34.00	13.60	6.80	6.80	NBR/FABRIC	SBT-996
P431108317	135.00	110.00	37.00	14.80	7.40	7.40	NBR/FABRIC	SBT-1378
P431078401	139.70	107.95	46.83	18.73	9.36	9.36	NBR/FABRIC	SBT-3070
P431158302	140.00	115.00	26.00	10.40	5.20	5.20	NBR/FABRIC	SBT-1039
P431158305	140.00	115.00	50.00	20.00	10.00	10.00	NBR/FABRIC	SBT-2625
P431208502	140.00	120.00	34.00	13.60	6.80	6.80	FKM	SBT-2038
P431238301	140.00	123.30	25.00	10.00	5.00	5.00	NBR/FABRIC	SBT-2291
P431258502	145.00	125.00	20.00	8.00	4.00	4.00	FKM/FABRIC	SBT-1564
P431278601	146.05	127.00	25.40	10.20	5.10	5.10	FKM/FABRIC	SBT-2967
P431208307	150.00	120.00	36.67	14.66	7.33	7.33	NBR/FABRIC	SBT-2023
P431258307	150.00	125.00	40.00	16.00	8.00	8.00	NBR/FABRIC	SBT-2211
P431278301	152.00	127.00	29.00	11.60	5.80	5.80	NBR/FABRIC	SBT-939
P431278302	152.40	127.00	33.02	13.20	6.60	6.60	NBR/FABRIC	SBT-2008
P431268301	154.00	126.00	23.00	9.20	4.60	4.60	NBR/FABRIC	SBT-1684
P431258305	155.00	125.00	37.00	14.80	7.40	7.40	NBR/FABRIC	SBT-2067
P431308309	158.00	130.00	25.00	10.00	5.00	5.00	NBR/FABRIC	SBT-1167
P431308313	160.00	130.00	27.50	11.00	5.50	5.50	NBR/FABRIC	SBT-1285
P431308503	160.00	130.00	35.00	14.00	7.00	7.00	FKM/FABRIC	SBT-363
P431308315	160.00	130.00	48.70	19.48	9.74	9.74	NBR/FABRIC	SBT-2707
P431358309	160.00	135.00	39.00	15.60	7.80	7.80	NBR/FABRIC	SBT-2343
P431358309	160.00	135.00	39.00	15.60	7.80	7.80	NBR/FABRIC	PPA-948
P431408505	160.00	140.00	23.75	9.50	4.75	4.75	FKM/FABRIC	SBT-2525
P431428302	162.00	142.00	25.00	10.00	5.00	5.00	NBR/FABRIC	SBT-1133
P431408316	165.00	140.00	42.50	17.00	8.50	8.50	FKM/FABRIC	SBT-1966
P431408321	165.00	140.00	50.00	20.00	10.00	10.00	NBR/FABRIC	SBT-1040
P431408311	170.00	140.00	35.00	14.00	7.00	7.00	NBR/FABRIC	SBT-1446
P431458304	170.00	145.00	36.00	14.40	7.20	7.20	NBR/FABRIC	SBT-1985
P431458303	175.00	145.00	35.00	14.00	7.00	7.00	NBR/FABRIC	SBT-521
P431468301	177.80	146.05	31.75	12.70	6.35	6.35	NBR/FABRIC	SBT-1571
P431528301	177.80	152.40	25.40	10.20	5.10	5.10	NBR/FABRIC	SBT-2382
P431508312	178.00	150.00	28.00	11.20	5.60	5.60	NBR/FABRIC	SBT-1926
P431508309	180.00	150.00	25.00	10.00	5.00	5.00	NBR/FABRIC	SBT-756
P431508308	180.00	150.00	27.72	11.10	5.54	5.54	NBR/FABRIC	SBT-1975
P431588501	190.50	158.75	38.10	15.24	7.62	7.62	FKM/FABRIC	SBT-1224
P431588301	192.00	158.00	33.00	13.20	6.60	6.60	NBR/FABRIC	SBT-2631
P431708307	195.00	170.00	24.00	9.60	4.80	4.80	NBR/FABRIC	SBT-2034
P431608302	200.00	160.00	40.00	16.00	8.00	8.00	NBR/FABRIC	SBT-2205
P431708311	200.00	170.00	29.90	11.96	5.98	5.98	NBR/FABRIC	SBT-3030
P431708308	200.00	170.00	35.50	14.20	7.10	7.10	FKM/FABRIC	SBT-1337
P431708304	200.00	170.00	38.00	15.20	7.60	7.60	NBR/FABRIC	SBT-568
P431708306	200.00	170.00	40.00	16.00	8.00	8.00	NBR/FABRIC	SBT-1852
P431758305	200.00	175.00	28.00	11.20	5.60	5.60	NBR/FABRIC	SBT-2194
P43172K201	201.50	172.00	36.15	14.46	7.23	7.23	NBR/FABRIC	SBT-1201
P431708301	202.00	170.00	38.00	15.20	7.60	7.60	NBR/FABRIC	SBT-1029
P431758303	202.00	175.00	35.00	14.00	7.00	7.00	NBR/FABRIC	SBT-1630

Vee pack height can be adjusted by increasing or reducing the numbers of centre rings (C). This calculation can be done by the height of 'C' shown in the table.
Bold sizes are readily available in stock.
Other materials are available on request.

P43

Single Acting Piston V Packing

MAX SPARE LIMITED
QUALITY. PRECISION. SPEED.

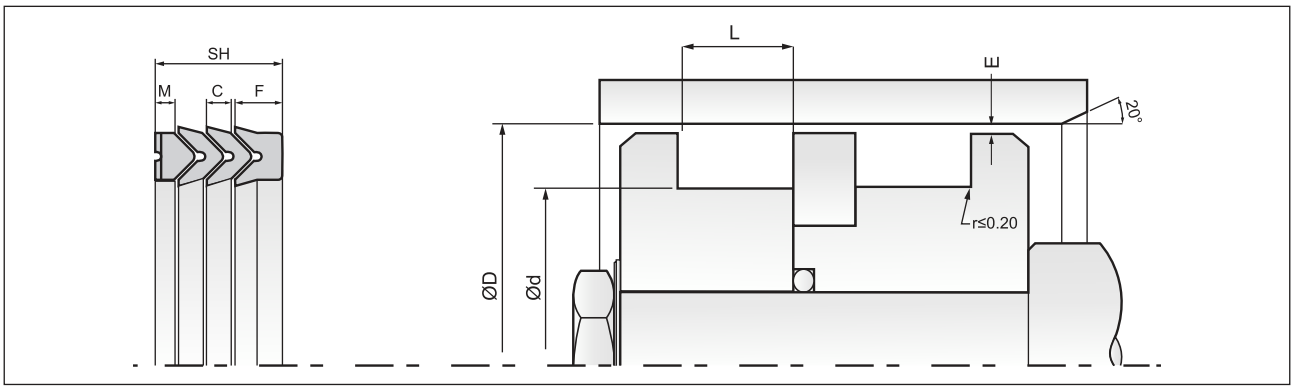

Part No.	D	d	SH (Stack Ht.)	F	C	M	Material	Mould No.
P431778303	203.90	177.80	26.50	10.60	5.30	5.30	NBR/FABRIC	SBT-166
P431758304	206.00	175.90	43.00	17.20	8.60	8.60	NBR/FABRIC	SBT-1830
P431758306	208.00	175.00	40.00	16.00	8.00	8.00	NBR/FABRIC	SBT-2479
P431808312	210.00	180.00	31.50	12.60	6.30	6.30	NBR/FABRIC	SBT-1977
P431808305	210.00	180.00	37.00	14.80	7.40	7.40	NBR/FABRIC	SBT-2009
P431808307	210.00	180.00	43.00	17.20	8.60	8.60	NBR/FABRIC	SBT-1468
P431828301	215.00	182.00	43.00	17.20	8.60	8.60	NBR/FABRIC	SBT-943
P431858303	215.00	185.00	41.00	16.40	8.20	8.20	NBR/FABRIC	SBT-1867
P431868301	215.00	186.00	43.00	17.20	8.60	8.60	NBR/FABRIC	SBT-944
P431908301	220.00	190.00	35.00	14.00	7.00	7.00	NBR/FABRIC	SBT-1303
P431901201	220.00	190.00	40.00	16.00	8.00	8.00	NBR/FABRIC	SBT-2401
P432008310	220.00	200.00	20.00	8.00	4.00	4.00	NBR/FABRIC	SBT-3004
P432008305	230.00	200.00	40.00	16.00	8.00	8.00	NBR/FABRIC	SBT-129
P432108304	240.00	210.00	42.00	16.80	8.40	8.40	NBR/FABRIC	SBT-1050
P432158302	247.00	215.00	52.00	20.80	10.40	10.40	NBR/FABRIC	SBT-1805
P432198301	250.00	219.00	38.50	15.40	7.70	7.70	NBR/FABRIC	SBT-2073
P432208602	250.00	220.00	32.50	13.00	6.50	6.50	FKM/FABRIC	SBT-3208
P432208307	250.00	220.00	33.50	13.40	6.70	6.70	NBR/FABRIC	SBT-1991
P432208310	250.00	220.00	45.00	18.00	9.00	9.00	NBR/FABRIC	SBT-2516
P432158301	252.00	215.50	36.00	14.40	7.20	7.20	NBR/FABRIC	SBT-1517
P432208313	252.10	220.00	43.34	17.33	8.66	8.66	NBR/FABRIC	SBT-2949
P432288303	260.34	228.60	40.42	16.20	8.10	8.10	NBR/FABRIC	SBT-2044
P432278301	262.00	227.00	35.00	14.00	7.00	7.00	NBR/FABRIC	SBT-2380
P432288301	266.70	228.60	38.10	15.24	7.62	7.62	NBR/FABRIC	SBT-807
P432408303	275.00	240.00	28.00	11.20	5.60	5.60	NBR/FABRIC	SBT-3029
P432508504	280.00	250.00	27.44	11.00	5.50	5.50	FKM/FABRIC	SBT-181
P432508502	280.00	250.00	35.00	14.00	7.00	7.00	FKM/FABRIC	SBT-980
P432548304	285.00	254.50	38.50	15.40	7.70	7.70	NBR/FABRIC	SBT-1640
P432698301	300.00	269.66	44.98	18.00	9.00	9.00	NBR/FABRIC	SBT-1362
P432708301	300.00	270.00	38.00	15.20	7.60	7.60	NBR/FABRIC	SCT-799
P432708306	300.00	270.00	43.20	17.28	8.64	8.64	NBR/FABRIC	SBT-2992
P432708302	300.00	270.00	57.50	23.00	11.50	11.50	NBR/FABRIC	SBT-650
P432748301	304.00	274.00	42.00	16.80	8.40	8.40	NBR/FABRIC	SCT-1039
P432758301	304.80	275.59	34.29	13.70	6.85	6.85	NBR/FABRIC	SCT-501
P432708304	310.00	270.00	50.00	20.00	10.00	10.00	NBR/FABRIC	SCT-215
P432806601	310.00	280.00	50.00	20.00	10.00	10.00	FKM/FABRIC	SCT-792
P432858302	315.00	285.00	35.00	14.00	7.00	7.00	NBR/FABRIC	SCT-941
P432858301	315.50	285.00	35.50	14.20	7.10	7.10	NBR/FABRIC	SCT-915
P432908601	320.00	290.00	35.00	14.00	7.00	7.00	FKM/FABRIC	SCT-1155
P432908507	320.00	290.00	38.70	15.48	7.74	7.74	FKM/FABRIC	SCT-448
P432908304	320.00	290.00	39.50	15.80	7.90	7.90	NBR/FABRIC	SCT-908
P432908506	320.50	290.00	32.50	13.00	6.50	6.50	FKM/FABRIC	SCT-993
P433058301	345.00	305.00	55.00	22.00	11.00	11.00	NBR/FABRIC	SCT-1146
P433248301	356.00	324.00	44.50	17.80	8.90	8.90	NBR/FABRIC	SCT-1012
P433258301	356.00	325.00	22.00	8.80	4.40	4.40	NBR/FABRIC	SCT-1070
P433308501	360.00	330.00	43.20	17.28	8.64	8.64	FKM/FABRIC	SCT-523
P433301201	360.00	330.00	43.90	17.56	8.78	8.78	NBR/FABRIC	SCT-1001
P433358301	365.00	335.00	42.00	16.80	8.40	8.40	NBR/FABRIC	SCT-844
P433228301	367.00	322.00	40.00	16.00	8.00	8.00	NBR/FABRIC	SCT-857
P433600601	400.00	360.00	57.00	22.80	11.40	11.40	NBR/FABRIC	SCT-899
P433606901	406.40	360.00	52.00	20.80	10.40	10.40	FKM/FABRIC	SCT-522
P43380K202	407.65	380.00	50.00	20.00	10.00	10.00	NBR/FABRIC	SCT-419

Vee pack height can be adjusted by increasing or reducing the numbers of centre rings (C). This calculation can be done by the height of 'C' shown in the table.
Bold sizes are readily available in stock.
Other materials are available on request.

P43

Single Acting Piston V Packing

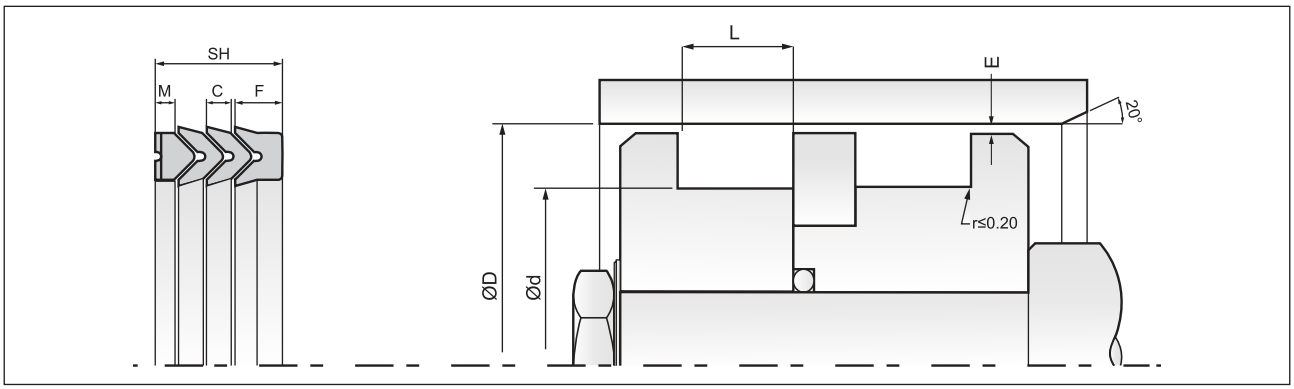

Part No.	D	d	SH (Stack Ht.)	F	C	M	Material	Mould No.
P433808303	420.00	380.00	47.00	18.80	9.40	9.40	NBR/FABRIC	SCT-954
P433908301	430.00	390.00	64.04	24.00	12.00	12.00	NBR/FABRIC	SCT-926
P434001201	430.00	400.00	43.20	17.28	8.64	8.64	NBR/FABRIC	SCT-1022
P434008303	433.00	400.00	37.00	14.80	7.40	7.40	NBR/FABRIC	SCT-716
P433928301	435.00	392.00	35.00	14.00	7.00	7.00	NBR/FABRIC	SCT-537
P434108301	445.00	410.00	42.50	17.00	8.50	8.50	NBR/FABRIC	SCT-989
P43410M101	450.00	410.00	50.00	20.00	10.00	10.00	HNBR	SCT-1058
P434158301	450.00	415.00	41.50	16.60	8.30	8.30	NBR/FABRIC	SCT-907
P434168501	450.00	416.00	50.00	20.00	10.00	10.00	FKM/FABRIC	SCT-533
P434108307	452.00	410.00	51.50	20.60	10.30	10.30	NBR/FABRIC	SCT-1114
P434258301	465.00	425.00	80.00	32.00	16.00	16.00	NBR/FABRIC	SCT-910
P434578301	495.30	457.20	38.10	15.24	7.62	7.62	NBR/FABRIC	SCT-564
P434628301	495.70	462.70	43.00	17.20	8.60	8.60	NBR/FABRIC	SCT-862
P434808305	520.00	480.00	57.50	23.00	11.50	11.50	NBR/FABRIC	SCT-1043
P434808302	550.00	480.00	50.00	20.00	10.00	10.00	NBR/FABRIC	SCT-555
P435458301	602.00	545.00	65.00	26.00	13.00	13.00	NBR/FABRIC	SCT-636
P436208401	660.00	620.00	37.43	14.97	7.48	7.48	NBR/FABRIC	SCT-346
P436801201	720.00	680.00	57.50	23.00	11.50	11.50	NBR/FABRIC	SCT-1130
P437208301	770.00	720.00	60.00	24.00	12.00	12.00	NBR/FABRIC	SCT-147
P438508301	900.00	850.00	57.50	23.00	11.50	11.50	NBR/FABRIC	SCT-416
P439998301	1210.00	1150.00	75.00	30.00	15.00	15.00	NBR/FABRIC	SCT-492

Vee pack height can be adjusted by increasing or reducing the numbers of centre rings (C). This calculation can be done by the height of 'C' shown in the table.
Bold sizes are readily available in stock.
Other materials are available on request.

ROD SEALS

MAX SPARE LIMITED
QUALITY. PRECISION. SPEED.

MAX TYPE	PRODUCT NAME	SEAL PROFILE	APPLICATION	PRESSURE (max) bar	TEMPERATURE	SPEED m/s	PAGE NO
S19	U SEAL		SINGLE ACTING	400	-30°C TO +100°C	1.0	115
S20	U SEAL		SINGLE ACTING	400	-30°C TO +100°C	1.0	133
S21	U SEAL		SINGLE ACTING	400	-30°C TO +100°C	1.0	147
S23	U SEAL		SINGLE ACTING	400	-30°C TO +100°C	1.0	149
S33	U SEAL		SINGLE ACTING	450	-30°C TO +100°C	1.0	151
S28	U SEAL		SINGLE ACTING	700	-30°C TO +100°C	1.0	153
S29	U SEAL		SINGLE ACTING	700	-30°C TO +100°C	1.0	155
S32	U SEAL		SINGLE ACTING	700	-30°C TO +100°C	0.5	157
S46	FLUID SEAL		SINGLE ACTING	400	-30°C TO +100°C	0.5	161
S15	STEP SEAL		SINGLE ACTING	400	-30°C TO +100°C	10.0	171
S16	STEP SEAL		SINGLE ACTING	400	-30°C TO +100°C	10.0	175
S59	CHEVRON PACK		SINGLE ACTING	400	-30°C TO +100°C	0.5	177
S60	CHEVRON PACK		SINGLE ACTING	400	-30°C TO +100°C	0.5	203

S19

Single Acting Rod Seal

DETAILS

S19 seal is a flexible seal suitable for sealing piston rod. The additional O-ring profile at the bottom provides as a back-up to the main sealing lip, providing lubrication, abrasion resistance & remains unaffected with varying pressures. Also available in nitrile (NBR) up to 160 BAR besides Polyurethane for 400 BAR. Due to excellent wear resistance properties of polyurethane, the life expected is 3 times that of NBR.

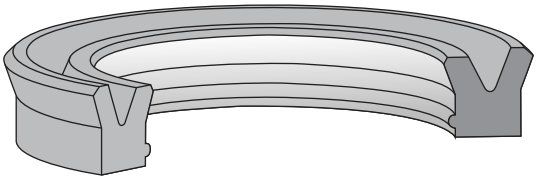

COMPATIBILITY

Mineral oils, bio oils, water soluble & water glycol fluids

MATERIAL

Polyurethane 92 Shore A
Nitrile Rubber 80/85 Shore A

APPLICATION

- Light to medium duty hydraulic cylinders.
- Can also be used in conjunction with S15 style rod seals for heavy duty applications.
- Mining equipment.
- Hydraulic presses.

OPERATING CONDITIONS

Temperature Range	:	-30°C to + 100°C
Pressure	:	PU - 400 Bar
		NBR - 160 Bar
Speed	:	PU - 1.0 m/s
		NBR - 0.5 m/s

FEATURES

- Simple installation.
- Long service life.
- An O-ring profile at bottom improves sealing & serves as a good back-up to the main sealing lip.
- It wipes off small traces of oil that passes the sealing lip with every stroke.

SURFACE ROUGHNESS

Static	:	1.6 µmRa
Dynamic	:	0.4 µmRa

INSTALLATION & ASSEMBLY

Careful fitting is a prerequisite for the correct functioning of the seal. Pl. refer to page no. 26 for guidelines.

PERMISSIBLE EXTRUSION GAP	E max (mm)
150 Bar	0.60
250 Bar	0.50
400 Bar	0.40

S19

Single Acting Rod Seal

MAX SPARE LIMITED
QUALITY. PRECISION. SPEED.

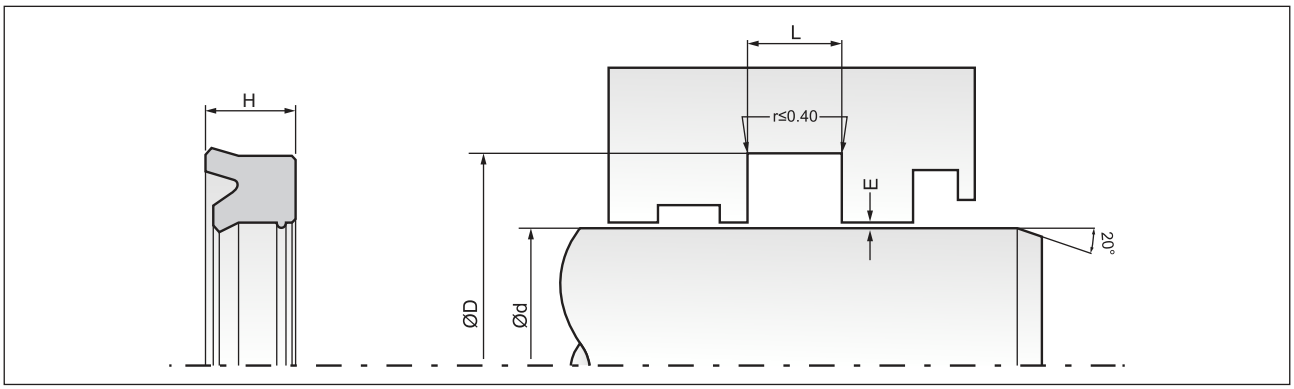

Part No.	d (f8)	D (H9)	L (+0.2)	H	Material	Mould No.
S190031101	3.00	7.50	5.00	4.50	NBR	SUA-1992
S19004L503	4.00	7.50	5.00	4.50	PU	PUA-594
S190046701	4.00	10.00	5.50	5.00	FKM	SUA-2234
S190041101	4.00	12.00	6.50	6.00	NBR	SUA-763
S19004L501	4.00	12.00	6.50	6.00	PU	PUA-323
S19004L502	4.50	10.00	6.50	6.00	PU	PUA-404
S19005L501	5.00	15.00	10.00	9.00	PU	PUA-800
S19006L505	6.00	10.00	4.50	4.00	PU	PUA-933
S190062201	6.00	12.00	4.50	4.00	CR	SUA-1204
S19006L503	6.00	12.00	6.00	5.50	PU	PUA-785
S19006L502	6.00	12.00	6.50	6.00	PU	PUA-617
S19006L504	6.00	12.00	9.00	8.00	PU	PUA-802
S190061101	6.00	13.00	5.00	4.50	NBR	SUA-1124
S19006L501	**6.00**	**14.00**	**6.00**	**5.50**	**PU**	**PUA-130**
S19007L502	7.50	12.50	4.10	3.60	PU	PUA-925
S19007L501	7.50	13.00	3.50	3.00	PU	PUA-417
S190081105	8.00	13.00	3.50	3.00	NBR	SUA-1462
S19008L506	8.00	14.00	3.70	3.20	PU	PUA-416
S19008L504	8.00	14.00	4.50	4.00	PU	PUA-420
S190086401	8.00	14.00	4.50	4.00	FKM	SUA-2448
S19008L509	8.00	14.00	9.00	8.00	PU	PUA-801
S19008CF01	8.00	15.00	6.43	5.93	PU	PUA-873
S19008L505	8.00	15.00	6.50	6.00	PU	PUA-418
S19008L503	8.00	16.00	5.70	5.20	PU	PUA-283
S19008L502	**8.00**	**16.00**	**6.20**	**5.70**	**PU**	**PUA-275**
S19008L502	8.00	16.00	6.20	5.70	PU	PUA-606
S190081107	8.00	16.00	6.20	5.70	NBR	SUA-1876
S19008L510	8.00	16.00	6.30	5.80	PU	PUA-934
S190081104	8.00	18.00	9.00	8.00	NBR	SUA-772
S19009L502	9.40	20.00	5.50	5.00	PU	PUA-502
S19009L503	9.52	15.87	6.00	5.50	PU	PUA-838
S19009L501	9.52	19.05	6.85	6.35	PU	PUA-385
S19010L508	10.00	14.00	3.50	3.00	PU	PUA-419
S190101003	10.00	14.00	3.50	3.00	NBR	SUA-2363
S19010L509	10.00	15.00	4.10	3.60	PU	PUA-436
S19010L507	10.00	15.00	4.50	4.00	PU	PUA-401
S19010512	10.00	16.00	5.00	4.50	PU	PUA-723
S19010L504	10.00	16.00	5.80	5.30	PU	PUA-343
S19010L506	10.00	16.00	6.00	5.50	PU	PUA-394
S190106601	10.00	16.00	6.00	5.50	FKM	SUA-2236
S19010L511	10.00	16.00	6.50	6.00	PU	PUA-669
S19010L510	10.00	16.00	9.00	8.00	PU	PUA-589
S19010Q202	10.00	17.00	5.00	4.50	PU	PUA-825
S190101001	10.00	17.00	6.80	6.30	NBR	SUA-1597
S190106601	10.00	18.00	5.80	5.30	FKM	SUA-2103
S19010L501	**10.00**	**18.00**	**6.00**	**5.50**	**PU**	**PUA-227**
S190101004	10.00	19.00	7.50	7.00	NBR	SUA-2501
S190106701	10.00	20.00	5.50	5.00	FKM	SUA-2396
S19104501	10.00	20.00	6.50	6.00	VMQ	SUA-1855
S19010L513	10.00	20.00	7.00	6.50	PU	PUA-860
S190106702	10.00	20.00	7.80	7.30	FKM	SUA-2441
S19010L503	10.00	20.00	9.00	8.00	PU	PUA-341

Part No.	d (f8)	D (H9)	L (+0.2)	H	Material	Mould No.
S19010L502	10.00	22.00	7.50	7.00	PU	PUA-280
S19010L502	10.00	22.00	7.50	7.00	PU	PUA-499
S19011L502	11.00	17.00	7.00	6.50	PU	PUA-813
S19011L501	11.00	18.00	4.00	3.50	PU	PUA-311
S190116601	11.50	20.00	6.20	5.70	FKM	SUA-2348
S190114501	11.70	20.00	6.20	5.70	VMQ	SUA-2046
S190121104	12.00	16.00	3.50	3.00	NBR	SUA-1465
S19012L517	12.00	16.00	4.50	4.00	PU	PUA-477
S19012L516	12.00	17.00	4.20	3.70	PU	PUA-448
S19012L525	12.00	17.00	5.00	4.50	PU	PUA-641
S19012L513	12.00	18.00	3.50	3.00	PU	PUA-428
S19012L507	12.00	18.00	4.10	3.60	PU	PUA-285
S19012L526	12.00	18.00	4.50	4.00	PU	PUA-654
S19012L508	12.00	18.00	6.20	5.70	PU	PUA-321
S190126602	12.00	18.00	6.50	6.00	FKM	SUA-2052
S19012CF01	12.00	18.00	6.80	6.30	PU	PUA-872
S19012L512	12.00	19.00	4.50	4.00	PU	PUA-383
S190123401	12.00	19.00	5.00	4.50	EPDM	SUA-2176
S19012L527	12.00	19.00	5.20	4.70	PU	PUA-803
S19012L515	12.00	19.00	5.50	5.00	PU	PUA-432
S190126603	12.00	20.00	6.00	5.50	FKM	SUA-2095
S190121003	12.00	20.00	6.00	5.50	NBR	SUA-2364
S190121001	12.00	20.00	6.20	5.70	NBR	SUA-1374
S19012L505	**12.00**	**20.00**	**6.20**	**5.70**	**PU**	**PUA-273**
S19012L505	12.00	20.00	6.20	5.70	PU	PUA-609
S19012L501	12.00	20.00	6.30	5.80	PU	PUA-513
S190126601	12.00	20.00	6.80	6.30	FKM	SUA-1750
S19012L510	12.00	20.00	10.00	9.00	PU	PUA-342
S19012V301	12.00	22.00	5.50	5.00	NBR	SUA-2320
S190126702	12.00	22.00	6.50	6.00	FKM	SUA-2495
S19012L506	12.00	22.00	7.50	7.00	PU	PUA-281
S19012L506	12.00	22.00	7.50	7.00	PU	PUA-330
S19012L503	**12.00**	**22.00**	**7.80**	**7.30**	**PU**	**PUA-276**
S19012L523	12.00	22.00	11.00	10.00	PU	PUA-616
S19012L511	12.00	22.00	11.40	10.40	PU	PUA-348
S19015L502	12.00	23.00	6.50	6.00	PU	PUA-430
S19012L519	12.00	23.30	6.20	5.70	PU	PUA-503
S19012BF01	12.00	25.00	7.50	7.00	VMQ	SUA-2190
S19012V201	12.00	25.00	7.50	7.00	NBR	SUA-2146
S19012L520	12.50	22.50	5.50	5.00	PU	PUA-517
S19012L528	12.50	22.50	9.50	8.50	PU	PUA-922
S190121105	12.70	18.00	6.50	6.00	NBR	SUA-101
S19012L524	12.70	19.05	5.24	4.74	PU	PUA-640
S190126605	12.70	19.05	5.50	5.00	FKM	SUA-2214
S19012L522	12.70	19.05	6.85	6.35	PU	PUA-615
S19012L521	12.70	25.40	6.85	6.35	PU	PUB-1185
S190121103	12.70	25.40	6.85	6.35	NBR	SUB-2367
S19013L502	13.00	19.00	4.50	4.00	PU	PUA-415
S19013L501	13.00	19.00	6.50	6.00	PU	PUA-395
S19014L508	14.00	19.00	2.70	2.20	PU	PUA-501
S19014L505	14.00	19.00	4.50	4.00	PU	PUA-384
S190146702	14.00	19.00	5.00	4.50	FKM	SUA-1370

Bold sizes are readily available in stock.
Other materials are available on request.

S19

Single Acting Rod Seal

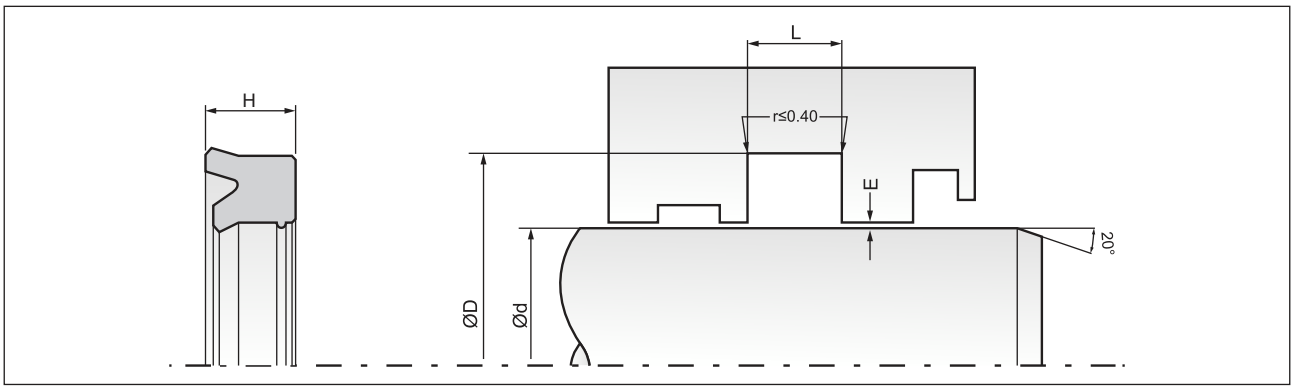

Part No.	d (f8)	D (H9)	L (+0.2)	H	Material	Mould No.
S190141001	14.00	19.00	5.00	4.50	NBR	SUA-1984
S19014L506	14.00	20.00	4.50	4.00	PU	PUA-461
S19014L510	14.00	20.00	7.80	7.30	PU	PUA-721
S190144501	14.00	20.00	7.80	7.30	VMQ	SUA-2003
S190146401	14.00	20.00	7.80	7.30	FKM	SUA-2122
S19014L502	**14.00**	**21.00**	**5.50**	**5.00**	**PU**	**PUA-279**
S19014Q201	14.00	22.00	5.50	5.00	PU	PUA-826
S190141002	14.00	22.00	5.50	5.00	NBR	SUA-2178
S19014L504	14.00	22.00	6.00	5.50	PU	PUA-349
S190141101	14.00	22.00	6.00	5.50	NBR	SUA-2128
S19014L509	14.00	22.00	6.30	5.80	PU	PUA-514
S19014L503	14.00	22.00	6.80	6.30	PU	PUA-340
S19014L507	14.00	22.00	7.50	7.00	PU	PUA-492
S19014L401	14.00	23.00	5.50	5.00	PU	PUA-725
S19014L513	14.00	24.00	7.00	6.50	PU	PUA-938
S19014L501	**14.00**	**24.00**	**7.80**	**7.30**	**PU**	**PUA-277**
S19015L505	15.00	19.00	3.50	3.00	PU	PUA-789
S190151001	15.00	21.50	5.00	4.50	NBR	SUA-1598
S19015L502	15.00	23.00	6.50	6.00	PU	PUA-465
S190156601	15.50	21.00	4.00	3.50	FKM	SUA-1859
S190151101	15.50	21.00	4.00	3.50	NBR	SUA-2379
S19015R301	15.87	22.22	3.67	3.17	PU	PUA-564
S19015L506	15.87	22.22	5.24	4.74	PU	PUA-827
S19015R302	15.87	22.22	5.26	4.76	PU	PUA-575
S19015L504	15.87	22.22	5.26	4.76	PU	PUA-600
S19015L501	15.87	22.22	6.85	6.35	PU	PUA-157
S19016L520.	16.00	20.60	4.10	3.60	PU	PUA-856
S190161004	16.00	21.00	7.50	7.00	NBR	SUA-1785
S19016L507	16.00	22.00	4.00	3.50	PU	PUA-353
S19016L508	16.00	22.00	4.50	4.00	PU	PUA-163
S19016L501	**16.00**	**22.00**	**5.00**	**4.50**	**PU**	**PUA-115**
S19016L501	16.00	22.00	5.00	4.50	PU	PUA-681
S19016L520	16.00	22.00	5.50	5.00	PU	PUA-230
S190161001	16.00	22.00	5.50	5.00	NBR	SUA-1170
S19016L402	16.00	23.00	4.50	4.00	PU	PUA-522
S19016L503	**16.00**	**23.00**	**5.50**	**5.00**	**PU**	**PUA-173**
S19016L503	16.00	23.00	5.50	5.00	PU	PUA-745
S19016L517	16.00	23.50	5.50	5.00	PU	PUA-593
S19016L516	16.00	23.50	6.10	5.60	PU	PUA-247
S190166601	16.00	24.00	4.50	4.00	FKM	SUA-2030
S19016L515	16.00	24.00	5.50	5.00	PU	PUA-572
S190161103	16.00	24.00	5.50	5.00	NBR	SUA-1223
S19016L511	16.00	24.00	5.50	5.00	PU	PUB-944
S19016L513	16.00	24.00	5.80	5.30	PU	PUA-518
S19016L502	**16.00**	**24.00**	**6.20**	**5.70**	**PU**	**PUA-220**
S19016L401	16.00	24.00	6.20	5.70	PU	PUA-519
S19016R302	16.00	24.00	6.20	5.70	PU	PUA-541
S19016L21	16.00	24.00	6.50	6.00	PU	PUA-714
S190161005	16.00	24.00	6.80	6.30	NBR	SUA-1932
S19016L519	16.00	24.00	6.80	6.30	PU	PUA-652
S19016L522	16.00	24.00	10.00	9.00	PU	PUA-734
S19016L521	16.00	24.50	6.30	5.80	PU	PUA-865

Part No.	d (f8)	D (H9)	L (+0.2)	H	Material	Mould No.
S19016L510	16.00	25.00	5.50	5.00	PU	PUA-425
S190166701	16.00	25.00	6.50	6.00	FKM	SUA-1949
S19016U101	16.00	25.00	7.80	7.30	FKM	SUA-1640
S19016L514	16.00	25.00	7.80	7.30	PU	PUA-560
S190166602	16.00	26.00	5.50	5.00	FKM	SUB-3522
S19016L504	**16.00**	**26.00**	**7.80**	**7.30**	**PU**	**PUB-165**
S190167701	16.00	26.00	7.80	7.30	FKM	SUB-3949
S19016L509	16.00	26.00	9.00	8.00	PU	PUB-737
S19016L506	16.00	26.00	11.40	10.40	PU	PUB-666
S19017L501	17.00	23.00	4.50	4.00	PU	PUA-421
S19018L512	18.00	24.00	4.50	4.00	PU	PUA-241
S19018L502	**18.00**	**24.00**	**5.30**	**4.80**	**PU**	**PUA-114**
S19018L502	18.00	24.00	5.30	4.80	PU	PUA-689
S190186601	18.00	25.00	5.50	5.00	FKM	SUA-1860
S190181006	18.00	25.00	5.50	5.00	NBR	SUA-1962
S19018L508	**18.00**	**25.00**	**5.50**	**5.00**	**PU**	**PUA-105**
S190181004	18.00	25.00	6.10	5.60	NBR	SUA-1959
S19018L513	18.00	25.00	6.50	6.00	PU	PUA-396
S190181001	18.00	25.00	6.70	6.20	NBR	SUA-1722
S19018L514	18.00	26.00	5.50	5.00	PU	PUB-842
S19018L509	18.00	26.00	6.00	5.50	PU	PUB-487
S190181005	18.00	26.00	6.10	5.60	NBR	SUB-3273
S19018L506	**18.00**	**26.00**	**6.20**	**5.70**	**PU**	**PUB-279**
S19018L517	18.00	26.00	6.30	5.80	PU	PUB-1949
S190181009	18.00	26.00	9.00	8.00	NBR	SUB-4208
S19018CF01	18.00	27.00	6.50	6.00	PU	PUB-1806
S190181002	18.00	28.00	5.90	5.40	NBR	SUB-2948
S190181003	18.00	28.00	6.50	6.00	NBR	SUB-3197
S19018L515	18.00	28.00	7.50	7.00	PU	PUB-1070
S19018L510	**18.00**	**28.00**	**7.80**	**7.30**	**PU**	**PUB-516**
S19018L510	18.00	28.00	7.80	7.30	PU	PUB-1703
S190186701	18.00	28.00	7.80	7.30	FKM	SUB-3903
S190186602	18.00	28.00	9.00	8.00	FKM	SUB-3558
S19018L503	**18.00**	**28.00**	**9.00**	**8.00**	**PU**	**PUB-101**
S190181008	18.00	28.00	9.00	8.00	NBR	SUB-3919
S19018L511	18.00	29.00	6.00	5.50	PU	PUB-607
S19018L505	18.00	38.00	6.90	6.40	PU	PUB-923
S19019L514	19.00	25.00	4.50	4.00	PU	PUA-558
S19019L503	**19.00**	**25.00**	**6.50**	**6.00**	**PU**	**PUA-274**
S19019L513	19.00	25.40	3.70	3.20	PU	PUB-1146
S19019L504	19.00	27.00	5.50	5.00	PU	PUB-576
S190191001	19.00	28.00	6.00	5.50	NBR	SUB-2400
S19019L507	19.00	28.00	6.00	5.50	PU	PUB-820
S19019L512	19.00	28.00	6.30	5.80	PU	PUB-1127
S19190901	19.00	29.00	5.90	5.40	NBR	SUB-3613
S190191004	19.00	29.00	6.50	6.00	NBR	SUB-3090
S19019L502	**19.00**	**30.00**	**7.50**	**7.00**	**PU**	**PUB-495**
S19019U301	19.00	30.00	7.80	7.30	FKM	SUB-3730
S19019L511	19.00	32.00	9.00	8.00	PU	PUB-896
S19019L515	19.00	32.00	10.00	9.00	PU	PUB-1481
S19019L505	19.00	32.00	13.00	12.00	PU	PUB-729
S190191003	19.00	32.00	13.00	12.00	NBR	SUB-3089

Bold sizes are readily available in stock.
Other materials are available on request.

S19

Single Acting Rod Seal

MAX SPARE LIMITED
QUALITY. PRECISION. SPEED.

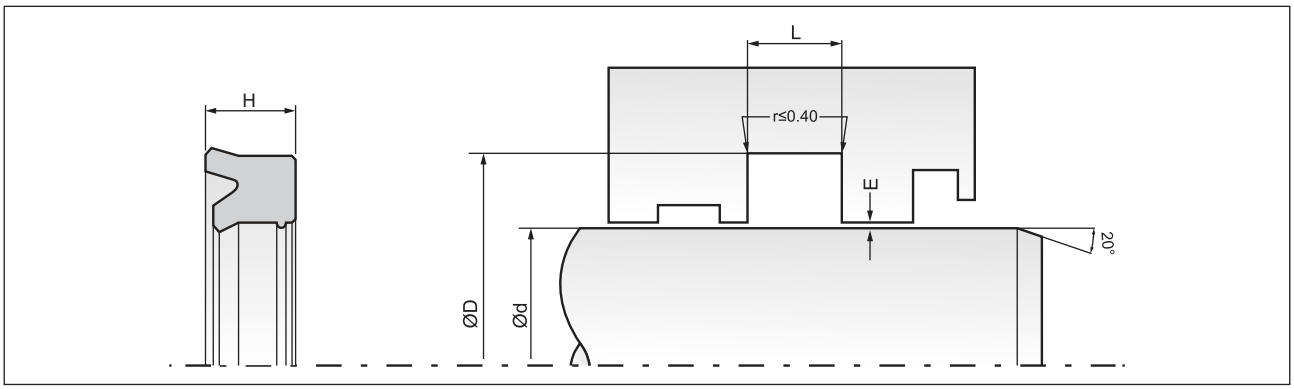

Part No.	d (f8)	D (H9)	L (+0.2)	H	Material	Mould No.
S19019R301	19.05	25.40	3.67	3.17	PU	PUB-1217
S190196701	19.05	25.40	7.10	6.60	FKM	SUB-2471
S190206602	20.00	26.00	4.00	3.50	FKM	SUB-1516
S19020L505	20.00	26.00	4.20	3.70	PU	PUB-652
S19020L505	20.00	26.00	4.50	4.00	PU	PUB-724
S190206612	20.00	26.00	5.30	4.80	FKM	SUB-3524
S19020L526	20.00	26.00	5.50	5.00	PU	PUB-1377
S19020L509	20.00	26.00	5.70	5.20	PU	PUB-632
S19020L501	20.00	26.00	6.00	5.50	PU	PUB-628
S190201106	20.00	26.00	6.00	5.50	NBR	SUB-2678
S1902011105	20.00	26.00	6.50	6.00	NBR	SUB-2391
S19020L512	20.00	27.00	6.50	6.00	PU	PUB-735
S19020L531	20.00	28.00	5.50	5.00	PU	PUB-1455
S190206613	20.00	28.00	6.00	5.50	FKM	SUB-3724
S19020L502	**20.00**	**28.00**	**6.20**	**5.70**	**PU**	**PUB-113**
S190201102	20.00	28.00	6.20	5.70	NBR	SUB-1449
S190206703	20.00	28.00	6.20	5.70	FKM	SUB-2681
S19020L518	20.00	28.00	6.30	5.80	PU	PUB-920
S19020L525	20.00	28.00	6.50	6.00	PU	PUB-1376
S19020L533	20.00	28.00	6.50	6.00	PU	PUB-1836
S19020L506	**20.00**	**28.00**	**6.80**	**6.30**	**PU**	**PUB-477**
S190201002	20.00	28.00	6.80	6.30	NBR	SUB-3196
S19020L530	20.00	28.00	9.00	8.00	PU	PUB-1456
S19020Q201	20.00	29.00	5.70	5.20	PU	PUB-1745
S19020L513	20.00	30.00	5.50	5.00	PU	PUB-738
S190206702	20.00	30.00	6.20	5.70	FKM	SUB-2487
S190206608	20.00	30.00	6.20	5.70	FKM	SUB-3100
S19020L504	**20.00**	**30.00**	**6.20**	**5.70**	**PU**	**PUB-497**
S19020L514	20.00	30.00	6.50	6.00	PU	PUB-739
S19020L528	20.00	30.00	6.50	6.00	PU	PUB-1457
S190201103	20.00	30.00	6.80	6.30	NBR	SUB-1760
S190206614	20.00	30.00	7.20	6.70	FKM	SUB-3798
S190201004	20.00	30.00	7.30	6.80	NBR	SUB-4000
S190201104	20.00	30.00	7.50	7.00	NBR	SUB-2354
S19020L503	**20.00**	**30.00**	**7.80**	**7.30**	**PU**	**PUB-517**
S19020L503	20.00	30.00	7.80	7.30	PU	PUB-1169
S19020L503.	20.00	30.00	7.80	7.30	PU	PUB-1807
S190206606	20.00	30.00	7.90	7.40	FKM	SUB-2714
S19020L532	20.00	30.00	8.00	7.50	PU	PUB-1637
S190206607	20.00	30.00	9.00	8.00	FKM	SUB-3095
S19020L519	20.00	30.00	9.00	8.00	PU	PUB-1056
S19020L529	20.00	30.00	9.00	8.00	PU	PUB-131
S19020L507	**20.00**	**30.00**	**11.00**	**10.00**	**PU**	**PUB-496**
S190206603	20.00	30.00	11.00	10.00	FKM	SUB-2168
S19020L536	20.00	31.00	13.00	12.00	PU	PUB-1936
S190206604	20.00	31.50	9.20	8.20	FKM	SUB-2369
S19020L520	20.00	32.00	5.50	5.00	PU	PUB-1110
S19020L521	20.00	32.00	7.50	7.00	PU	PUB-1111
S190206605	20.00	32.00	7.50	7.00	FKM	SUB-2623
S190201108	20.00	32.00	7.50	7.00	NBR	SUB-4218
S19020L523	20.00	32.00	7.80	7.30	PU	PUB-1112
S19020L516	20.00	32.00	9.00	8.00	PU	PUB-854

Part No.	d (f8)	D (H9)	L (+0.2)	H	Material	Mould No.
S19020L508	20.00	33.00	11.00	10.00	PU	PUB-563
S190206615	20.00	35.00	7.80	7.30	FKM	SUB-4037
S19020L511	20.00	35.00	11.00	10.00	PU	PUB-730
S19020L534	20.63	24.63	6.40	5.90	PU	PUA-901
S190216601	21.50	30.00	6.50	6.00	FKM	SUB-3387
S19022L513	22.00	28.00	4.50	4.00	PU	PUB-1375
S190226610	22.00	28.00	4.50	4.00	FKM	SUB-4041
S190226607	22.00	28.00	5.50	5.00	FKM	SUB-3311
S190226611	22.00	28.00	9.00	8.00	FKM	SUB-4151
S19022L502	**22.00**	**29.00**	**5.50**	**5.00**	**PU**	**PUB-132**
S190226601	22.00	29.00	5.50	5.00	FKM	SUB-2549
S19022L505	22.00	29.00	6.50	6.00	PU	PUB-661
S190226608	22.00	30.00	6.00	5.50	FKM	SUB-3519
S19022L501	**22.00**	**30.00**	**6.20**	**5.70**	**PU**	**PUB-153**
S190226604	22.00	30.00	6.20	5.70	FKM	SUB-2842
S19022L509	22.00	30.00	6.50	6.00	PU	PUB-473
S190221001	22.00	30.00	6.80	6.30	NBR	SUB-2878
S190226602	22.00	30.00	6.80	6.30	FKM	SUB-2624
S19022L506	22.00	30.00	7.00	6.50	PU	PUB-741
S19022L511	22.00	30.00	7.50	7.00	PU	PUB-1109
S19022L510	22.00	30.00	9.00	8.00	PU	PUB-853
S19022L516	22.00	30.00	9.00	8.00	PU	PUB-1452
S190226703	22.00	30.00	9.00	8.00	FKM	SUB-3245
S190226612	22.00	31.00	7.80	7.30	FKM	SUB-4197
S19022L514	22.00	32.00	6.50	6.00	PU	PUB-1454
S19022L507	22.00	32.00	6.50	6.00	PU	PUB-742
S190221002	22.00	32.00	7.00	6.50	NBR	SUB-3251
S19022L517	22.00	32.00	7.50	7.00	PU	PUB-1451
S19022R301	22.00	32.00	7.50	7.00	PU	PUB-891
S19022L504	**22.00**	**32.00**	**7.80**	**7.30**	**PU**	**PUB-404**
S190221107	22.00	32.00	7.80	7.30	NBR	SUB-2496
S190226704	22.00	32.00	7.80	7.30	FKM	SUB-3414
S19022L504	22.00	32.00	7.80	7.30	PU	PUB-1767
S19022L519	22.00	32.00	9.00	8.00	PU	PUB-1699
S19022L515	22.00	32.00	9.00	8.00	PU	PUB-1453
S19022L508	22.00	32.00	9.00	8.00	PU	PUB-743
S190226705	22.00	32.00	9.00	8.00	FKM	SUB-3853
S19022L518	22.00	32.00	11.00	10.00	PU	PUB-1608
S190226603	22.00	32.50	4.50	4.00	FKM	SUB-2688
S190226609	22.00	33.00	5.50	5.00	FKM	SUB-3895
S190221003	22.00	35.00	11.00	10.00	NBR	SUB-3999
S19022R303	22.22	28.57	5.26	4.76	PU	PUB-1220
S19022C401	22.22	28.57	5.42	4.92	XNBR	SUB-4138
S19022L512	22.22	28.57	7.48	6.98	PU	PUB-1353
S19023L501	23.00	30.00	4.00	3.50	PU	PUB-1327
S19024L501	24.00	30.00	4.50	4.00	PU	PUB-740
S19024L504	24.00	34.00	5.50	5.00	PU	PUB-1548
S190246602	24.00	40.00	11.00	10.00	FKM	SUB-3260
S190246601	24.80	35.50	7.00	6.50	FKM	SUB-3174
S19024L502	24.89	31.00	5.50	5.00	PU	PUB-836
S19024L503	24.89	31.35	5.50	5.00	PU	PUB-849
S19025L537	25.00	31.00	4.50	4.00	PU	PUB-1374

Bold sizes are readily available in stock.
Other materials are available on request.

S19

Single Acting Rod Seal

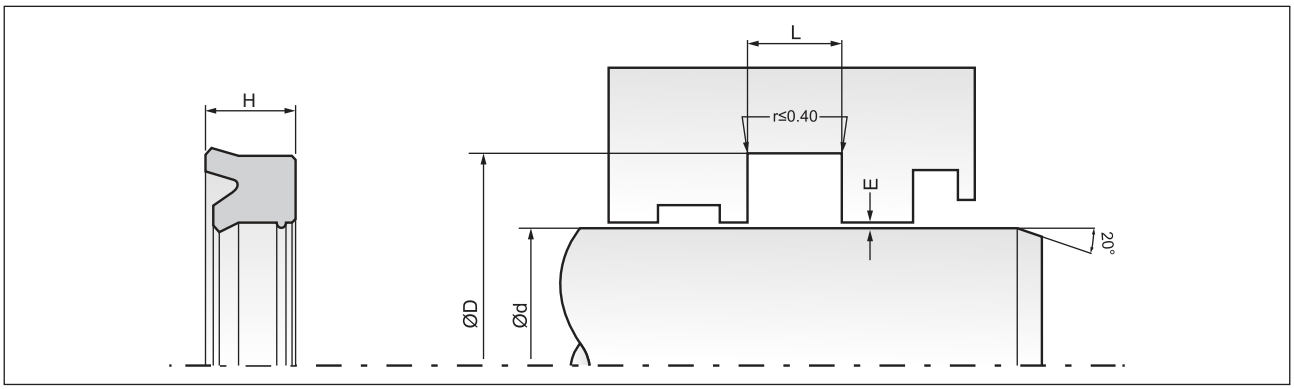

Part No.	d (f8)	D (H9)	L (+0.2)	H	Material	Mould No.
S19025L552	25.00	31.00	5.50	5.00	PU	PUB-1863
S19025L532	25.00	31.00	10.00	9.00	PU	PUB-1160
S19025L535	25.00	32.00	4.50	4.00	PU	PUB-1354
S19025L517	25.00	32.00	6.50	6.00	PU	PUB-744
S19025L554	25.00	32.50	7.50	7.00	PU	PUB-1935
S190256608	25.00	33.00	5.50	5.00	FKM	SUB-2683
S19025L514	25.00	33.00	5.50	5.00	PU	PUB-1378
S190253501	25.00	33.00	5.50	5.00	EPDM	SUB-2847
S19025L551	25.00	33.00	5.50	5.00	PU	PUB-1832
S19025L503	25.00	33.00	5.90	5.40	PU	PUB-158
S19025L503	25.00	33.00	5.90	5.40	PU	PUB-942
S19025L553	25.00	33.00	6.00	5.50	PU	PUB-1874
S19025L505	**25.00**	**33.00**	**6.20**	**5.70**	**PU**	**PUB-478**
S19025L512	25.00	33.00	6.30	5.80	PU	PUB-645
S190256602	25.00	33.00	6.30	5.80	FKM	SUB-2121
S19025L515	**25.00**	**33.00**	**6.50**	**6.00**	**PU**	**PUB-726**
S190256601	25.00	33.00	6.50	6.00	FKM	SUB-1671
S190255920	25.00	33.00	6.80	6.30	PU	PUB-361
S19025L550	25.00	33.00	6.80	6.30	PU	PUB-1810
S190256616	25.00	33.00	6.80	6.30	FKM	SUB-3478
S19025L531	25.00	33.00	7.00	6.50	PU	PUB-1159
S19025L546	25.00	33.00	7.50	7.00	PU	PUB-1628
S19025L506	**25.00**	**33.00**	**7.80**	**7.30**	**PU**	**PUB-435**
S19025L528	25.00	33.00	9.00	8.00	PU	PUB-1047
S19025L516	25.00	33.00	9.00	8.00	PU	PUB-745
S190256606	25.00	33.00	9.00	8.00	FKM	SUB-2612
S190251102	25.00	33.00	10.00	9.00	NBR	SUB-2605
S19025L542	25.00	33.00	11.00	10.00	PU	PUB-1458
S190256609	25.00	34.00	7.00	6.50	FKM	SUB-2805
S19025L529	25.00	35.00	5.50	5.00	PU	PUB-1071
S19025L501	**25.00**	**35.00**	**6.20**	**5.70**	**PU**	**PUB-149**
S190256607	25.00	35.00	6.20	5.70	FKM	SUB-2672
S19025L533	25.00	35.00	6.50	6.00	PU	PUB-748
S190256613	25.00	35.00	6.50	6.00	FKM	SUB-3004
S190256610	25.00	35.00	7.00	6.50	FKM	SUB-2806
S19025L521	25.00	35.00	7.50	7.00	PU	PUB-749
S190256705	25.00	35.00	7.50	7.00	FKM	SUB-2262
S19025L502	**25.00**	**35.00**	**7.80**	**7.30**	**PU**	**PUB-389**
S190256603	25.00	35.00	7.80	7.30	FKM	SUB-2251
S190253401	25.00	35.00	7.80	7.30	EPDM	SUB-3811
S19025L523	25.00	35.00	7.90	7.40	PU	PUB-803
S190256703	25.00	35.00	8.00	7.50	FKM	SUB-2111
S190256706	25.00	35.00	8.00	7.50	FKM	SUB-3121
S19025L540	25.00	35.00	9.00	8.00	PU	PUB-1450
S190256702	25.00	35.00	9.00	8.00	FKM	SUB-1960
S19025L504	**25.00**	**35.00**	**9.00**	**8.00**	**PU**	**PUB-408**
S190251103	25.00	35.00	9.00	8.00	NBR	SUB-2820
S19025L541	25.00	35.00	11.00	10.00	PU	PUB-1449
S19025L507	**25.00**	**35.00**	**11.00**	**10.00**	**PU**	**PUB-1415**
S190251006	25.00	35.50	8.00	7.50	NBR	SUB-3109
S19025L548	25.00	36.00	6.00	5.50	PU	PUB-1652
S190251002	25.00	36.00	9.00	8.00	NBR	SUB-1492

Part No.	d (f8)	D (H9)	L (+0.2)	H	Material	Mould No.
S19025L525	25.00	36.00	10.00	9.00	PU	PUB-829
S19025L549	25.00	37.00	6.50	6.00	PU	PUB-1705
S19025Q201	25.00	38.00	6.85	6.35	PU	PUB-1748
S190251004	25.00	38.00	6.90	6.40	NBR	SUB-2949
S19025L534	**25.00**	**38.00**	**7.50**	**7.00**	**PU**	**PUB-1307**
S190251104	25.00	38.00	7.80	7.30	NBR	SUB-3286
S190256615	25.00	38.00	11.00	10.00	FKM	SUB-3453
S19025L518	25.00	38.00	11.00	10.00	PU	PUB-755
S19025L530	25.00	40.00	11.00	10.00	PU	PUB-759
S190251009	25.00	40.00	11.00	10.00	NBR	SUB-3694
S190256619	25.00	40.50	13.00	12.00	FKM	SUB-3767
S19025L522	25.00	45.00	11.00	10.00	PU	PUB-766
S190256708	25.00	58.00	7.30	6.80	FKM	SUC-2319
S19025R301	25.40	31.75	3.67	3.17	PU	PUB-1218
S19025L511	25.40	31.75	5.26	4.76	PU	PUB-617
S19025L536	25.40	31.75	6.85	6.35	PU	PUB-1380
S190256711	25.40	31.75	6.85	6.35	FKM	SUB-4190
S19025L509	25.40	31.75	7.00	6.50	PU	PUB-219
S190256621	25.40	33.34	5.26	4.76	FKM	SUB-3931
S190256620	25.40	33.40	6.00	5.50	FKM	SUB-3918
S190256611	25.40	33.45	6.30	5.80	FKM	SUB-2898
S190251003	25.40	33.50	5.00	4.50	NBR	SUB-1649
S190250801	25.40	36.11	9.90	8.90	NBR	SUB-1914
S19025L547	25.40	37.50	7.50	7.00	PU	PUB-1650
S19025L524	25.40	38.00	7.00	6.50	PU	PUB-821
S190256605	25.40	38.10	9.00	8.00	FKM	SUB-2559
S19025L557	25.40	38.10	10.60	9.60	PU	PUB-2031
S19025L556	25.40	38.10	11.00	10.00	PU	PUB-1979
S19026L501	**26.00**	**33.00**	**9.00**	**8.00**	**PU**	**PUB-499**
S190261101	26.00	34.00	5.50	5.00	NBR	SUB-2677
S190266701	26.00	36.00	9.00	8.00	FKM	SUB-3229
S19026L504	26.00	42.00	13.00	12.00	PU	PUB-1956
S19026L502	26.97	33.32	6.85	6.35	PU	PUB-1117
S19027L501	27.00	40.00	7.50	7.00	PU	PUB-1086
S19028L513	28.00	34.00	4.70	4.24	PU	PUB-746
S19028L512	28.00	34.00	6.00	5.50	PU	PUB-747
S190286702	28.00	35.00	6.50	6.00	FKM	SUB-2180
S19028L521	28.00	35.00	6.50	6.00	PU	PUB-1303
S19028L505	28.00	35.50	5.50	5.00	PU	PUB-489
S190286709	28.00	36.00	5.00	4.50	FKM	SUB-3898
S190286708	28.00	36.00	5.50	5.00	FKM	SUB-3562
S19028L518	28.00	36.00	5.50	5.00	PU	PUB-1006
S190286607	28.00	36.00	6.00	5.50	FKM	SUB-3523
S19028L519	28.00	36.00	6.20	5.70	PU	PUB-1068
S190286704	28.00	36.00	6.20	5.70	FKM	SUB-2682
S19028L526	28.00	36.00	6.30	5.80	PU	PUB-1381
S19028L517	28.00	36.00	6.50	6.00	PU	PUB-1017
S190286707	28.00	36.00	6.50	6.00	FKM	SUB-3419
S190281102	28.00	36.00	6.50	6.00	NBR	SUB-3294
S19028L517	**28.00**	**36.00**	**6.50**	**6.00**	**PU**	**PUB-957**
S19028L508	28.00	36.00	6.90	6.40	PU	PUB-655
S19028L503	**28.00**	**36.00**	**7.80**	**7.30**	**PU**	**PUB-500**

Bold sizes are readily available in stock.
Other materials are available on request.

S19

Single Acting Rod Seal

MAX SPARE LIMITED
QUALITY. PRECISION. SPEED.

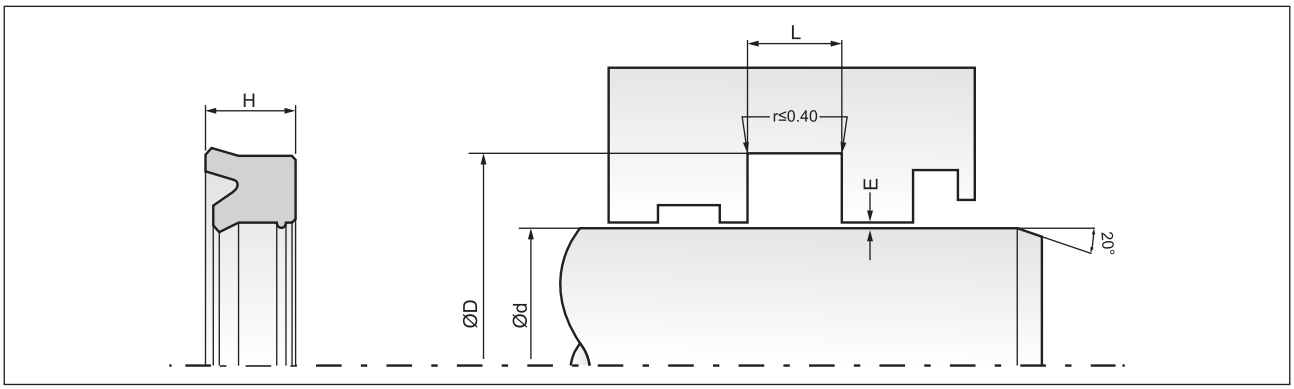

Part No.	d (f8)	D (H9)	L (+0.2)	H	Material	Mould No.
S190286602	28.00	36.00	7.80	7.30	FKM	SUB-2803
S19028L514	28.00	36.00	9.00	8.00	PU	PUB-750
S190286701	28.00	36.00	11.00	10.00	FKM	SUB-2070
S190286705	28.00	37.80	6.50	6.00	FKM	SUB-2737
S19028L506	28.00	38.00	4.50	4.00	PU	PUB-566
S19028L527	28.00	38.00	6.30	5.80	PU	PUB-1382
S190286610	28.00	38.00	6.50	6.00	FKM	SUB-4078
S190281103	28.00	38.00	7.50	7.00	NBR	SUB-3427
S19028L525	28.00	38.00	7.50	7.00	PU	PUB-1379
S19028L501	**28.00**	**38.00**	**7.80**	**7.30**	**PU**	**PUB-148**
S19028L501	28.00	38.00	7.80	7.30	PU	PUB-1171
S190286703	28.00	38.00	7.80	7.30	FKM	SUB-2495
S19028L530	28.00	38.00	8.70	7.70	PU	PUB-1707
S190286706	28.00	38.00	9.00	8.00	FKM	SUB-3191
S190281001	28.00	38.00	9.00	8.00	NBR	SUB-3287
S19028L516	28.00	38.00	9.00	8.00	PU	PUB-756
S19028L528	28.00	38.00	11.00	10.00	PU	PUB-1459
S190286601	28.00	38.70	4.70	4.20	FKM	SUB-2606
S19028Q201	28.00	40.00	6.80	6.30	PU	PUB-1746
S19028L522	28.00	40.00	7.50	7.00	PU	PUB-1314
S190286603	28.00	40.00	7.50	7.00	FKM	SUB-2834
S19028L507	28.00	40.00	9.00	8.00	PU	PUB-703
S19028L507	28.00	40.00	9.00	8.00	PU	PUB-618
S19028L531	28.00	40.00	10.50	9.50	PU	PUB-1881
S19028L515	28.00	40.00	11.00	10.00	PU	PUB-760
S19028L510	28.00	40.00	23.00	22.00	PU	PUB-660
S19028L523	28.00	41.00	11.00	10.00	PU	PUB-1317
S190281101	28.00	43.00	23.50	22.50	NBR	SUB-2896
S19028R303	28.57	38.10	6.85	6.35	PU	PUB-1221
S19028L511	28.57	44.45	11.00	10.00	PU	PUB-676
S19030L533	30.00	37.00	3.50	3.00	PU	PUB-1972
S19030L511	30.00	37.00	6.50	6.00	PU	PUB-751
S19030L512	30.00	37.00	9.00	8.00	PU	PUB-752
S19030L513	30.00	37.00	11.00	10.00	PU	PUB-753
S19030L531	30.00	37.30	3.70	3.20	PU	PUB-1808
S190306606	30.00	38.00	6.20	5.70	FKM	SUB-3083
S19030L514	30.00	38.00	6.50	6.00	PU	PUB-754
S190301114	30.00	38.00	7.50	7.00	NBR	SUB-2039
S19030L528	30.00	38.00	7.50	7.00	PU	PUB-1383
S190306704	30.00	38.00	7.50	7.00	FKM	SUB-3839
S19030L503	**30.00**	**38.00**	**9.00**	**8.00**	**PU**	**PUB-501**
S190306601	30.00	38.00	9.00	8.00	FKM	SUB-1824
S19030L515	30.00	38.00	11.00	10.00	PU	PUB-757
S19030L524	30.00	40.00	4.50	4.00	PU	PUB-1101
S19030L510	30.00	40.00	5.50	5.00	PU	PUB-736
S19030L527	30.00	40.00	6.20	5.70	PU	PUB-1284
S19030L525	30.00	40.00	6.50	6.00	PU	PUB-761
S190306701	30.00	40.00	6.50	6.00	FKM	SUB-1669
S190301115	30.00	40.00	6.50	6.00	NBR	SUB-2453
S19030L504	**30.00**	**40.00**	**7.00**	**6.50**	**PU**	**PUB-476**
S190301103	30.00	40.00	7.00	6.50	NBR	SUB-3359
S190306602	30.00	40.00	7.50	7.00	FKM	SUB-3436

Part No.	d (f8)	D (H9)	L (+0.2)	H	Material	Mould No.
S19030L519	30.00	40.00	7.50	7.00	PU	PUB-852
S19030L501	**30.00**	**40.00**	**7.80**	**7.30**	**PU**	**PUB-146**
S190306604	30.00	40.00	7.80	7.30	FKM	SUB-2807
S19030L532	30.00	40.00	7.80	7.30	PU	PUB-1963
S190306608	30.00	40.00	9.00	8.00	FKM	SUB-3469
S19030L505	**30.00**	**40.00**	**9.00**	**8.00**	**PU**	**PUB-677**
S19030L502	**30.00**	**40.00**	**11.00**	**10.00**	**PU**	**PUB-126**
S19030L523	30.00	40.00	11.00	10.00	PU	PUB-1045
S190306605	30.00	40.00	11.00	10.00	FKM	SUB-3093
S190301102	30.00	40.00	11.00	10.00	NBR	SUB-604
S19030L521	30.00	41.00	4.70	4.20	PU	PUB-845
S19030L518	30.00	42.00	7.50	7.00	PU	PUB-764
S19030L529	30.00	42.00	11.00	10.00	PU	PUB-1462
S190306607	30.00	42.00	11.00	10.00	FKM	SUB-3366
S19030L520	30.00	43.00	11.00	10.00	PU	PUB-851
S19030L517	30.00	43.00	14.00	13.00	PU	PUB-767
S190301117	30.00	45.00	7.50	7.00	NBR	SUB-3897
S190308901	30.00	45.00	9.00	8.00	PU	PUB-524
S19030L509	**30.00**	**45.00**	**11.00**	**10.00**	**PU**	**PUB-638**
S190301112	30.00	45.00	11.00	10.00	NBR	SUB-1843
S19030L530	30.00	45.00	12.00	11.00	PU	PUB-1772
S19030L522	30.00	50.00	11.00	10.00	PU	PUB-916
S190306702	30.00	57.00	7.50	7.00	FKM	SUC-2019
S19031L301	31.75	38.10	5.26	4.76	AFLAS	SUB-3356
S19031L501	31.75	38.10	6.50	6.00	PU	PUB-758
S19031L503	31.75	41.27	7.48	6.98	PU	PUB-1329
S19031L505	31.75	41.28	8.94	7.94	PU	PUB-1461
S19031L506	31.75	44.45	10.52	9.52	PU	PUB-1629
S190311001	31.75	44.50	7.50	7.00	NBR	SUB-3010
S19032L533	32.00	38.00	4.50	4.00	PU	PUB-1373
S190326604	32.00	40.00	5.50	5.00	FKM	SUB-2995
S19032L514	32.00	40.00	5.50	5.00	PU	PUB-765
S19032L513	**32.00**	**40.00**	**6.20**	**5.70**	**PU**	**PUB-728**
S19032L513	32.00	40.00	6.20	5.70	PU	PUB-1299
S190326701	32.00	40.00	6.20	5.70	FKM	SUB-3418
S19032L532	32.00	40.00	6.50	6.00	PU	PUB-762
S19032L530	32.00	40.00	7.00	6.50	PU	PUB-196
S19032L512	32.00	40.00	7.00	6.50	PU	PUB-1061
S190326706	32.00	40.00	7.00	6.50	FKM	SUB-4183
S19032L538	32.00	40.00	7.00	6.50	PU	PUB-1873
S19032L534	32.00	40.00	7.50	7.00	PU	PUB-1387
S190326601	32.00	40.00	9.00	8.00	FKM	SUB-1759
S19B032L516	32.00	40.00	9.00	8.00	PU	PUB-763
S190326705	32.00	42.00	4.50	4.00	FKM	SUB-3628
S19032L504	**32.00**	**42.00**	**6.20**	**5.70**	**PU**	**PUB-502**
S190326703	32.00	42.00	6.20	5.70	FKM	SUB-3416
S19032L532	32.00	42.00	6.50	6.00	PU	PUB-1384
S19032L523	32.00	42.00	6.80	6.30	PU	PUB-847
S190321001	32.00	42.00	7.50	7.00	NBR	SUB-2482
S190326602	32.00	42.00	7.50	7.00	FKM	SUB-2483
S19032L537	32.00	42.00	7.50	7.00	PU	PUB-1834
S19032L502	**32.00**	**42.00**	**7.80**	**7.30**	**PU**	**PUB-145**

Bold sizes are readily available in stock.
Other materials are available on request.

S19

Single Acting Rod Seal

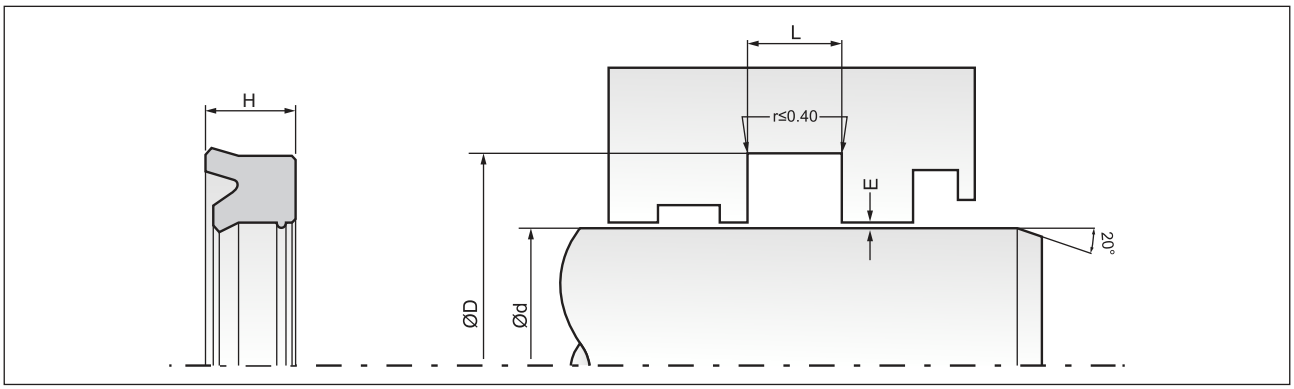

Part No.	d (f8)	D (H9)	L (+0.2)	H	Material	Mould No.
S19032L502	32.00	42.00	7.80	7.30	PU	PUB-1355
S190321002	32.00	42.00	7.80	7.30	NBR	SUB-3801
S190326704	32.00	42.00	7.80	7.30	FKM	SUB-3415
S19032L521	32.00	42.00	8.00	7.50	PU	PUB-799
S19032Q201	32.00	42.00	8.00	7.50	PU	PUB-1747
S19032L505	32.00	42.00	8.80	7.80	PU	PUB-926
S19032L524	32.00	42.00	9.00	8.00	PU	PUB-846
S19032R301	32.00	42.00	9.00	8.00	PU	PUB-890
S19032L501	**32.00**	**42.00**	**11.00**	**10.00**	**PU**	**PUB-416**
S190326702	32.00	42.00	11.00	10.00	FKM	SUB-3417
S19032L527	32.00	42.00	12.50	11.50	PU	PUB-893
S190326606	32.00	44.00	6.50	6.00	FKM	SUB-4215
S19032L517	32.00	44.00	11.00	10.00	PU	PUB-772
S190326605	32.00	45.00	9.00	8.00	FKM	SUB-3848
S19032L535	32.00	45.00	11.00	10.00	PU	PUB-1561
S190326603	32.00	45.00	11.00	10.00	FKM	SUB-2731
S19032L520	32.00	45.00	11.00	10.00	PU	PUB-775
S19032L525	32.00	46.00	11.00	10.00	PU	PUB-844
S19032L503	**32.00**	**47.00**	**11.00**	**10.00**	**PU**	**PUB-111**
S19032L536	32.00	47.00	13.00	12.00	PU	PUB-1815
S19032L526	32.00	48.00	11.00	10.00	PU	PUB-843
S19032L522	32.00	48.00	14.00	13.00	PU	PUB-841
S19032L518	32.00	50.00	11.00	10.00	PU	PUB-784
S19032L518	32.00	50.00	11.00	10.00	PU	PUB-1291
S19032L519	32.00	52.00	11.00	10.00	PU	PUC-578
S19033L501	33.00	43.00	11.00	10.00	PU	PUB-907
S190336601	33.42	44.71	9.00	8.00	FKM	SUB-2851
S19034L503	34.00	43.00	6.00	5.50	PU	PUB-894
S19034L504	34.00	43.00	6.30	5.80	PU	PUB-1126
S19034L506	34.00	45.00	6.50	6.00	PU	PUB-1590
S190346602	34.00	45.00	11.00	10.00	FKM	SUB-3005
S19034L502	34.00	50.00	13.00	12.00	PU	PUB-785
S190345901	34.11	46.02	8.95	7.95	PU	PUB-1607
S190346701	34.50	43.20	5.00	4.50	FKM	SUB-4040
S19034L505	34.50	45.00	6.50	6.00	PU	PUB-1523
S190346601	34.92	43.25	5.26	4.76	FKM	SUB-1085
S19034R301	34.92	44.45	8.93	7.93	PU	PUB-1219
S19034R302	34.92	47.62	8.93	7.93	PU	PUB-1222
S19034L508	34.92	50.80	12.11	11.11	PU	PUC-1230
S19035L510	35.00	41.00	6.50	6.00	PU	PUB-768
S19035L521	35.00	42.00	6.50	6.00	PU	PUB-848
S19035L511	35.00	42.00	7.50	7.00	PU	PUB-769
S190351004	35.00	43.00	6.10	5.60	NBR	SUB-3834
S190356612	35.00	43.00	6.20	5.70	FKM	SUB-3407
S19035L505	35.00	43.00	6.20	5.70	PU	PUB-475
S19035L509	35.00	43.00	6.50	6.00	PU	PUB-770
S19035C301	35.00	43.00	7.00	6.50	XNBR	SUB-2862
S19035L523	35.00	43.00	7.50	7.00	PU	PUB-1386
S19035L515	35.00	43.00	9.00	8.00	PU	PUB-771
S190356710	35.00	43.00	11.00	10.00	FKM	SUB-3847
S190356705	35.00	44.00	5.50	5.00	FKM	SUB-115
S190356605	35.00	44.00	6.70	6.20	FKM	SUB-2554

Part No.	d (f8)	D (H9)	L (+0.2)	H	Material	Mould No.
S19035L520	35.00	44.00	11.00	10.00	PU	PUB-850
S190356706	35.00	45.00	4.50	4.00	FKM	SUB-2927
S190351003	35.00	45.00	6.20	5.70	NBR	SUB-3833
S190356613	35.00	45.00	6.20	5.70	FKM	SUB-3406
S190351102	35.00	45.00	6.50	6.00	NBR	SUB-3433
S19035L531	35.00	45.00	6.50	6.00	PU	PUB-1838
S190356608	35.00	45.00	6.50	6.00	FKM	SUB-105
S19035L512	35.00	45.00	6.50	6.00	PU	PUB-776
S19035L513	35.00	45.00	7.50	7.00	PU	PUB-777
S19035L532	35.00	45.00	7.50	7.00	PU	PUB-1835
S190356709	35.00	45.00	7.50	7.00	FKM	SUB-3322
S19035L502	35.00	45.00	7.80	7.30	PU	PUB-715
S19035L502	**35.00**	**45.00**	**7.80**	**7.30**	**PU**	**PUB-164**
S190356704	35.00	45.00	7.80	7.30	FKM	SUB-2691
S190353401	35.00	45.00	7.80	7.30	EPDM	SUB-3882
S19035L538	35.00	45.00	7.80	7.30	PU	PUB-1948
S19035L514	35.00	45.00	9.00	8.00	PU	PUB-778
S19035L529	35.00	45.00	10.50	9.50	PU	PUB-1653
S19035L524	35.00	45.00	11.00	10.00	PU	PUB-1038
S19035L506	**35.00**	**45.00**	**11.00**	**10.00**	**PU**	**PUB-503**
S190356702	35.00	45.00	11.00	10.00	FKM	SUB-3420
S19035L536	35.00	45.00	12.00	11.00	PU	PUB-1882
S190356703	35.00	46.00	4.50	4.00	FKM	SUB-2259
S190356708	35.00	46.00	6.50	6.00	FKM	SUB-3301
S19035L526	35.00	46.00	7.30	6.80	PU	PUB-1230
S19035L503	**35.00**	**46.00**	**7.80**	**7.30**	**PU**	**PUB-150**
S19035L537	35.00	47.00	4.50	4.00	NBR	PUB-1955
S190356601	35.00	47.00	6.70	6.20	FKM	SUB-1594
S19035L516	35.00	47.00	11.00	10.00	PU	PUB-781
S190351101	35.00	47.50	6.20	5.70	NBR	SUB-2887
S19035L539	35.00	47.50	11.50	10.50	PU	PUB-1971
S19035L519	35.00	48.00	7.00	6.50	PU	PUB-822
S19035L508	35.00	48.00	11.00	10.00	PU	PUB-667
S190354501	35.00	50.00	7.50	7.00	NBR	SUB-3042
S190356602	35.00	50.00	9.00	8.00	FKM	SUB-2287
S190356606	35.00	50.00	11.00	10.00	FKM	SUB-2673
S19035L507	**35.00**	**50.00**	**11.00**	**10.00**	**PU**	**PUB-504**
S19035L533	35.00	50.00	11.00	10.00	PU	PUB-1837
S190351006	35.00	50.00	11.00	10.00	NBR	SUB-4064
S19035L517	35.00	51.00	11.00	10.00	PU	PUC-576
S19035L530	35.00	52.00	11.00	10.00	PU	PUC-1258
S19035L518	35.00	55.00	11.00	10.00	PU	PUC-579
S190356604	35.47	45.50	7.80	7.30	FKM	SUB-2553
S19035L527	35.50	45.00	6.20	5.70	PU	PUB-1552
S19035L528	35.50	45.00	7.00	6.50	PU	PUB-1603
S190366607	36.00	43.00	7.00	6.50	FKM	SUB-2782
S19036Q201	36.00	43.50	11.20	10.20	PU	PUB-1437
S190366605	36.00	44.00	5.50	5.00	FKM	SUB-2632
S19036L524	36.00	44.00	5.80	5.30	PU	PUB-1799
S19036L508	**36.00**	**44.00**	**6.20**	**5.70**	**PU**	**PUB-506**
S19036L503	36.00	44.00	6.50	6.00	PU	PUB-368
S190366705	36.00	44.00	6.50	6.00	FKM	SUB-3446

Bold sizes are readily available in stock.
Other materials are available on request.

S19

Single Acting Rod Seal

MAX SPARE LIMITED
QUALITY. PRECISION. SPEED.

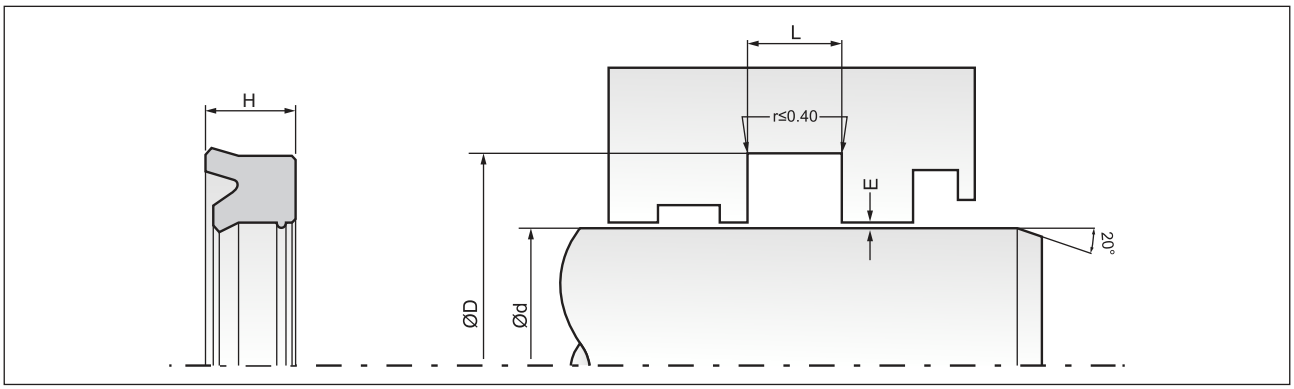

Part No.	d (f8)	D (H9)	L (+0.2)	H	Material	Mould No.
S19036341	36.00	44.00	6.50	6.00	EPDM	SUB-3927
S19036L506	**36.00**	**44.00**	**6.80**	**6.30**	**PU**	**PUB-505**
S190366709	36.00	44.00	8.60	7.60	FKM	SUB-3916
S19036L513	36.00	44.00	9.00	8.00	PU	PUB-773
S190366708	36.00	44.00	10.00	9.00	FKM	SUB-3880
S19036L514	36.00	44.00	11.00	10.00	PU	PUB-774
S190366604	36.00	44.00	11.00	10.00	FKM	SUB-2176
S190366704	36.00	45.00	5.50	5.00	FKM	SUB-3343
S19036L515	36.00	45.00	6.50	6.00	PU	PUB-779
S190366702	36.00	45.00	6.50	6.00	FKM	SUB-2656
S190366712	36.00	45.00	7.50	7.00	FKM	SUB-4042
S190366707	36.00	45.00	9.20	8.20	FKM	SUB-3667
S190366613	36.00	46.00	6.30	5.80	FKM	SUB-3538
S190366614	36.00	46.00	6.50	6.00	FKM	SUB-3641
S19036L520	36.00	46.00	6.50	6.00	PU	PUB-1539
S19036L525	36.00	46.00	7.50	7.00	PU	PUB-1833
S19036L502	36.00	46.00	7.80	7.30	PU	PUB-716
S190366603	36.00	46.00	7.80	7.30	FKM	SUB-2151
S19036L502	**36.00**	**46.00**	**7.80**	**7.30**	**PU**	**PUB-147**
S19036L522	36.00	46.00	8.80	7.80	PU	PUB-1631
S19036L523	36.00	46.00	9.00	8.00	PU	PUB-1710
S190366602	36.00	46.00	9.00	8.00	FKM	SUB-1976
S19036L518	36.00	46.00	9.00	8.00	PU	PUB-1385
S190361001	36.00	46.00	9.00	8.00	NBR	SUB-2841
S19036L516	36.00	46.00	9.50	8.50	PU	PUB-1197
S19036L512	**36.00**	**46.00**	**11.00**	**10.00**	**PU**	**PUB-701**
S190366711	36.00	46.00	11.00	10.00	FKM	SUB-1872
S19036L510	36.00	46.00	12.00	11.00	PU	PUB-584
S190366608	36.00	46.00	12.00	11.00	FKM	SUB-2854
S190366710	36.00	46.70	7.80	7.30	FKM	SUB-4029
S190368901	36.00	47.00	10.00	9.00	PU	PUB-190
S190366613	36.00	48.00	9.50	8.50	FKM	SUB-3532
S190361005	36.00	50.00	11.00	10.00	NBR	SUB-3388
S190368902	36.00	50.00	12.00	11.00	PU	PUB-1075
S19036L521	36.00	50.00	12.50	11.50	PU	PUB-1599
S19036L519	36.00	51.00	11.00	10.00	PU	PUC-948
S190368703	36.00	51.00	12.00	11.00	PU	PUC-1346
S190368701	36.12	45.64	8.00	7.50	PU	PUB-1316
S19037L504	37.00	47.00	10.00	9.00	PU	PUB-1960
S19037L503	37.00	47.00	11.00	10.00	PU	PUB-1532
S19037L501	37.80	50.00	8.00	7.50	PU	PUB-978
S19038L523	38.00	44.00	7.80	7.30	PU	PUB-1826
S19038L513	38.00	45.00	6.50	6.00	PU	PUB-1033
S19038L504	38.00	46.00	6.50	6.00	PU	PUB-780
S19038L510	38.00	47.00	6.50	6.00	PU	PUB-971
S19038L506	38.00	48.00	6.50	6.00	PU	PUB-783
S190386701	38.00	48.00	7.50	7.00	FKM	SUB-2432
S19038L502	38.00	48.00	7.80	7.30	PU	PUB-211
S19038L513	38.00	48.00	9.00	8.00	PU	PUB-1051
S19038L513	38.00	48.00	9.00	8.00	PU	PUB-1122
S19038L505	38.00	48.00	9.00	8.00	PU	PUB-782
S19038L518	38.00	48.00	10.00	9.00	PU	PUB-1390

Part No.	d (f8)	D (H9)	L (+0.2)	H	Material	Mould No.
S19038L5001	38.00	50.00	6.50	6.00	PU	PUB-1460
S19038L511	38.00	50.00	8.00	7.50	PU	PUB-1018
S19038L516	38.00	50.00	9.00	8.00	PU	PUB-1416
S190381101	38.00	50.00	11.00	10.00	NBR	SUB-2086
S19038L508	38.00	50.00	11.00	10.00	PU	PUB-786
S190388702	38.00	51.00	10.50	9.50	PU	PUC-1114
S19038L509	38.00	51.00	11.00	10.00	PU	PUC-577
S190386602	38.00	54.00	11.00	10.00	FKM	SUC-1870
S19038L517	38.00	54.00	13.00	12.00	PU	PUC-864
S19038L507	38.00	55.00	11.00	10.00	PU	PUC-580
S19038L519	38.10	44.45	6.85	6.35	PU	PUB-1389
S19038L503	38.10	47.62	6.85	6.35	PU	PUB-704
S19038L503	38.10	47.62	6.85	6.35	PU	PUB-619
S19038L522	38.10	47.62	6.85	6.35	PU	PUB-1719
S19038L520	38.10	47.63	10.53	9.53	PU	PUB-1388
S19038L515	**38.10**	**50.80**	**10.52**	**9.52**	**PU**	**PUC-282**
S19038L515	**38.10**	**50.80**	**10.52**	**9.52**	**PU**	**PUC-1242**
S190388701	38.10	51.58	10.50	9.50	PU	PUC-897
S190386603	38.10	53.97	7.43	6.93	FKM	SUC-2242
S190406705	40.00	47.00	5.50	5.00	FKM	SUB-2929
S190401001	40.00	47.00	6.50	6.00	NBR	SUB-1813
S190406606	40.00	47.00	6.50	6.00	FKM	SUB-3097
S19040L503	40.00	48.00	6.20	5.70	PU	PUB-1089
S19040L503	**40.00**	**48.00**	**6.20**	**5.70**	**PU**	**PUB-507**
S19040L542	40.00	48.00	6.20	5.70	PU	PUB-1831
S19040L543	40.00	48.00	6.50	6.00	PU	PUB-1830
S19040L511	40.00	48.00	6.50	6.00	PU	PUB-792
S19040L525	40.00	48.00	6.80	6.30	PU	PUB-1272
S19040L514	40.00	48.00	9.00	8.00	PU	PUB-834
S190406601	40.00	48.00	10.00	9.00	FKM	SUB-1942
S19040L520	40.00	48.00	10.00	9.00	PU	PUB-1007
S19040L515	40.00	48.00	11.00	10.00	PU	PUB-835
S190406608	40.00	48.00	11.40	10.40	FKM	SUB-3521
S190406613	40.00	49.00	6.20	5.70	FKM	SUB-4212
S190406607	40.00	49.00	7.50	7.00	FKM	SUB-3516
S19040L523	40.00	50.00	5.50	5.00	PU	PUB-1072
S190406702	40.00	50.00	6.50	6.00	FKM	SUB-1670
S19040L510	**40.00**	**50.00**	**6.50**	**6.00**	**PU**	**PUB-787**
S19040K302	40.00	50.00	6.50	6.00	HYT-HYTREL	PUB-1709
S19040CF01	40.00	50.00	6.70	6.20	PU	PUB-1871
S19040L538	40.00	50.00	7.00	6.50	PU	PUB-1654
S190406609	40.00	50.00	7.00	6.50	FKM	SUB-3729
S19040L544	40.00	50.00	7.50	7.00	PU	PUB-1828
S19040L524	40.00	50.00	7.50	7.00	PU	PUB-1102
S19040L509	40.00	50.00	7.50	7.00	PU	PUB-633
S19040L512	40.00	50.00	7.70	7.20	PU	PUB-798
S19040L528	40.00	50.00	7.70	7.20	PU	PUB-1366
S19040K301	40.00	50.00	7.80	7.30	HYT-2	PUB-709
S19040L501	40.00	50.00	7.80	7.30	PU	PUB-698
S190406701	40.00	50.00	7.80	7.30	FKM	SUB-1509
S19040L501	**40.00**	**50.00**	**7.80**	**7.30**	**PU**	**PUB-134**
S190401003	40.00	50.00	7.80	7.30	NBR	SUB-2642

Bold sizes are readily available in stock.
Other materials are available on request.

S19

Single Acting Rod Seal

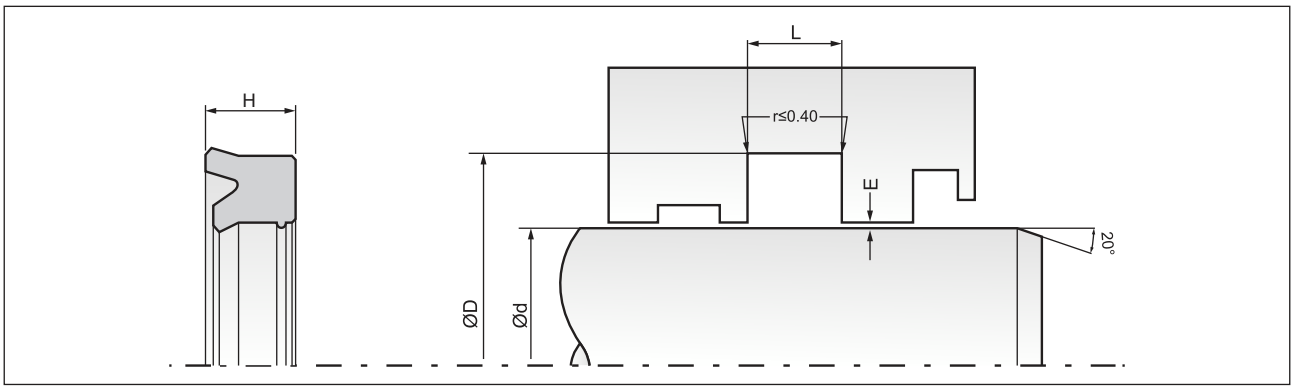

Part No.	d (f8)	D (H9)	L (+0.2)	H	Material	Mould No.
S19040L545	40.00	50.00	7.80	7.30	PU	PUB-1829
S19040L547	40.00	50.00	7.80	7.30	PU	PUB-1964
S190400901	40.00	50.00	7.90	7.40	NBR	SUB-3175
S190406605	40.00	50.00	9.00	8.00	FKM	SUB-3094
S19040L522	40.00	50.00	9.00	8.00	PU	PUB-833
S19040L507	40.00	50.00	9.00	8.00	PU	PUB-545
S190401105	40.00	50.00	9.00	8.00	NBR	SUB-4200
S19040L530	40.00	50.00	10.00	9.00	PU	PUB-1392
S19040L521	40.00	50.00	11.00	10.00	PU	PUB-1022
S19040L521	40.00	50.00	11.00	10.00	PU	PUB-1053
S19040L502	**40.00**	**50.00**	**11.00**	**10.00**	**PU**	**PUB-369**
S190403501	40.00	50.00	11.00	10.00	EPDM	SUB-2187
S190406603	40.00	50.00	11.00	10.00	FKM	SUB-2566
S19040L502	40.00	50.00	11.00	10.00	PU	PUB-1405
S19040L535	40.00	50.00	11.50	10.50	PU	PUB-1655
S19040L505	40.00	52.00	9.00	8.00	PU	PUC-394
S19040L513	40.00	52.00	11.00	10.00	PU	PUC-626
S19040L532	40.00	54.00	10.40	9.40	PU	PUC-935
S19040L516	40.00	55.00	9.00	8.00	PU	PUC-662
S19040L517	40.00	55.00	11.00	10.00	PU	PUC-661
S19040L546	40.00	55.00	11.00	10.00	PU	PUC-1302
S19040L536	40.00	55.00	11.50	10.50	PU	PUC-1137
S190406704	40.00	55.00	12.30	11.30	FKM	SUC-1603
S19040L506	**40.00**	**55.00**	**12.30**	**11.30**	**PU**	**PUC-405**
S19040L531	40.00	55.00	12.50	11.50	PU	PUC-951
S19040L537	40.00	55.00	13.50	12.50	PU	PUC-1136
S19040L540	40.00	55.00	14.00	13.00	PU	PUC-1207
S190406610	40.00	56.00	11.00	10.00	FKM	SUC-2594
S19040L526	40.00	56.00	11.50	10.50	PU	PUC-872
S190401104	40.00	60.00	11.00	10.00	NBR	SUC-2721
S19040L529	40.00	60.00	12.50	11.50	PU	PUC-950
S19040L518	40.00	60.00	13.00	12.00	PU	PUC-663
S19040L539	40.00	60.00	14.00	13.00	PU	PUC-1196
S19041L501	41.27	50.80	10.52	9.52	PU	PUC-1254
S19041R301	41.27	57.15	10.52	9.52	PU	PUC-836
S19042L502	42.00	50.00	6.20	5.70	PU	PUB-1391
S19042L504	42.00	50.00	6.50	6.00	PU	PUB-1630
S190426601	42.00	50.00	9.00	8.00	FKM	SUB-3534
S19042L501	42.00	50.00	9.00	8.00	PU	PUB-1297
S19042L501	**42.00**	**50.00**	**9.00**	**8.00**	**PU**	**PUB-508**
S19042R301	42.00	52.00	7.80	7.30	PU	PUC-846
S19044L506	44.00	53.52	7.80	7.30	PU	PUC-821
S19044L502	44.00	54.00	6.50	6.00	PU	PUC-627
S190446601	44.00	56.00	9.00	8.00	NBR	SUC-2197
S190441101	44.45	53.97	5.26	4.76	NBR	SUC-2507
S19044L505	44.45	53.97	9.00	8.00	PU	PUC-766
S19044L508	44.45	53.98	10.53	9.53	PU	PUC-949
S19044L501	44.45	55.56	10.52	9.52	PU	PUC-553
S19044L504	44.45	57.15	10.52	9.52	PU	PUC-239
S19044L510	44.45	57.15	10.80	9.80	PU	PUC-1448
S19044L509	44.45	57.93	10.70	9.70	PU	PUC-1203
S19044L503	44.50	54.50	7.50	7.00	PU	PUC-665

Part No.	d (f8)	D (H9)	L (+0.2)	H	Material	Mould No.
S19044L507	44.50	57.50	8.00	7.50	PU	PUC-883
S190456711	45.00	52.00	13.00	12.00	FKM	SUC-2053
S19045L534	45.00	53.00	5.80	5.30	PU	PUC-1277
S19045L523	45.00	53.00	6.10	5.60	PU	PUC-959
S19045L509	**45.00**	**53.00**	**6.20**	**5.70**	**PU**	**PUC-285**
S19045L509	45.00	53.00	6.20	5.70	PU	PUC-881
S190456713	45.00	53.00	6.20	5.70	FKM	SUC-2282
S190451105	45.00	53.00	6.50	6.00	NBR	SUC-2290
S190456610	45.00	53.00	6.50	6.00	FKM	SUC-1990
S19045L533	45.00	53.00	7.50	7.00	PU	PUC-1199
S190456623	45.00	53.00	7.50	7.00	FKM	SUC-2635
S19045L510	**45.00**	**53.00**	**9.00**	**8.00**	**PU**	**PUC-406**
S190456605	45.00	53.00	9.00	8.00	FKM	SUC-1047
S19045L528	45.00	53.00	11.00	10.00	PU	PUC-1066
S190456622	45.00	53.00	11.00	10.00	FKM	SUC-2550
S190456718	45.00	53.00	14.00	13.00	FKM	SUC-2595
S190456625	45.00	54.00	11.00	10.00	FKM	SUC-2775
S190456715	45.00	55.00	5.50	5.00	FKM	SUC-2311
S19045L507	45.00	55.00	6.00	5.50	PU	PUC-1140
S190451103	45.00	55.00	6.50	6.00	NBR	SUC-1910
S190456704	45.00	55.00	6.50	6.00	FKM	SUC-1827
S19045L516	45.00	55.00	6.50	6.00	PU	PUC-630
S190456621	45.00	55.00	6.50	6.00	FKM	SUC-2549
S19045L517	45.00	55.00	7.50	7.00	PU	PUC-629
S190456709	45.00	55.00	7.50	7.00	FKM	SUC-1951
S19045L514	45.00	55.00	7.80	7.30	PU	PUC-595
S19045L504	45.00	55.00	7.80	7.30	PU	PUC-568
S19045L504	**45.00**	**55.00**	**7.80**	**7.30**	**PU**	**PUC-123**
S190456602	45.00	55.00	7.80	7.30	FKM	SUC-997
S190451101	45.00	55.00	7.80	7.30	NBR	SUC-2144
S19045L536	45.00	55.00	7.80	7.30	PU	PUC-1366
S19045R305	45.00	55.00	9.00	8.00	PU	PUC-1075
S190451104	45.00	55.00	9.00	8.00	NBR	SUC-2145
S19045L518	**45.00**	**55.00**	**9.00**	**8.00**	**PU**	**PUC-628**
S19045L519	45.00	55.00	9.00	8.00	PU	PUC-775
S190456703	45.00	55.00	9.00	8.00	FKM	SUC-1554
S19045L518	45.00	55.00	9.00	8.00	PU	PUC-885
S190451006	45.00	55.00	9.90	8.90	NBR	SUC-2789
S19045L505	45.00	55.00	10.50	9.50	PU	PUC-1139
S19045L535	45.00	55.00	11.00	10.00	PU	PUC-1303
S19045L501	**45.00**	**55.00**	**11.00**	**10.00**	**PU**	**PUC-165**
S19045R301	45.00	55.00	11.00	10.00	PU	PUC-597
S190451102	45.00	55.00	11.00	10.00	NBR	SUC-1437
S190456606	45.00	55.00	11.00	10.00	FKM	SUC-1350
S190456608	45.00	55.00	11.50	10.50	FKM	SUC-1938
S190456619	45.00	55.00	12.00	11.00	FKM	SUC-2469
S19045L508	**45.00**	**55.00**	**12.50**	**11.50**	**PU**	**PUC-407**
S190456710	45.00	55.00	13.00	12.00	FKM	SUC-2013
S190456601	45.00	55.50	7.50	7.00	FKM	SUC-1387
S19045L515	45.00	56.00	7.70	7.20	PU	PUC-620
S19045L529	45.00	56.00	8.00	7.50	PU	PUC-1096
S190456614	45.00	56.00	9.00	8.00	FKM	SUC-2246

Bold sizes are readily available in stock.
Other materials are available on request.

S19

Single Acting Rod Seal

MAX SPARE LIMITED
QUALITY. PRECISION. SPEED.

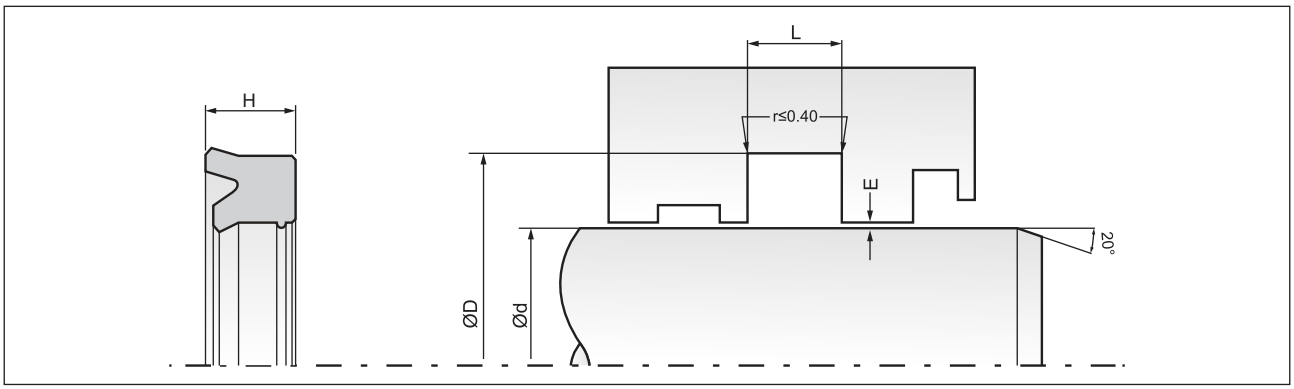

Part No.	d (f8)	D (H9)	L (+0.2)	H	Material	Mould No.
S19045L530	45.00	57.00	10.50	9.50	PU	PUC-1138
S19045L527	45.00	57.00	11.00	10.00	PU	PUC-1028
S19045L538	45.00	58.00	7.50	7.00	PU	PUC-1381
S19045L524	45.00	58.00	10.50	9.50	PU	PUC-936
S190456706	45.00	60.00	6.50	6.00	FKM	SUC-374
S190456616	45.00	60.00	7.00	6.50	FKM	SUC-2316
S190456712	45.00	60.00	9.00	8.00	FKM	SUC-2172
S19045L513	45.00	60.00	9.00	8.00	PU	PUC-542
S190456607	45.00	60.00	11.00	10.00	FKM	SUC-117
S190456702	45.00	60.00	11.00	10.00	FKM	SUC-1501
S19045L503	45.00	60.00	11.00	10.00	PU	PUC-129
S19045L531	45.00	60.00	11.50	10.50	PU	PUC-1142
S190456723	45.00	60.00	12.00	11.00	FKM	SUC-2785
S19045L506	**45.00**	**60.00**	**12.40**	**11.40**	**PU**	**PUC-205**
S190456609	45.00	60.00	12.40	11.40	FKM	SUC-1944
S19045L506	45.00	60.00	12.40	11.40	PU	PUC-1031
S190456708	45.00	60.00	12.50	11.50	FKM	SUC-1919
S190456722	45.00	60.00	13.00	12.00	FKM	SUC-2705
S190456707	45.00	60.00	13.50	12.50	FKM	SUC-1856
S19045L537	45.00	62.00	7.50	7.00	PU	PUC-1374
S190456624	45.00	62.00	9.50	8.50	FKM	SUC-2642
S190456617	45.00	62.00	11.00	10.00	FKM	SUC-2429
S19045L522	45.00	63.00	13.00	12.00	PU	PUC-926
S190456618	45.00	65.00	11.00	10.00	FKM	SUC-2428
S19045R304	45.00	65.00	13.00	12.00	PU	PUC-509
S190456720	45.00	65.00	13.50	12.50	FKM	SUC-2636
S19045L532	45.00	65.00	14.00	13.00	PU	PUC-1195
S19056L518	45.00	71.00	13.50	12.50	PU	PUC-1332
S190456615	45.80	60.00	9.00	8.00	FKM	SUC-2302
S19047L501	47.00	57.00	6.50	6.00	PU	PUC-632
S19047L502	47.00	57.00	9.00	8.00	PU	PUC-631
S19047L504	47.00	57.00	11.00	10.00	PU	PUC-633
S19047L503	47.00	62.00	9.00	8.00	PU	PUC-634
S19047L505	47.00	62.00	13.00	12.00	PU	PUC-660
S190476601	47.50	63.00	12.00	11.00	FKM	SUC-1926
S19048L501	48.00	58.00	6.50	6.00	PU	PUC-637
S19048L506	48.00	58.00	8.00	7.50	PU	PUC-1105
S19048L502	48.00	58.00	9.00	8.00	PU	PUC-635
S19048L503	48.00	58.00	11.00	10.00	PU	PUC-636
S19048L504	48.00	60.00	6.50	6.00	PU	PUC-901
S190486701	48.00	60.00	11.00	10.00	FKM	SUC-2706
S190486601	48.00	70.00	11.00	10.00	FKM	SUC-1927
S19049L501	49.50	60.50	6.50	6.00	PU	PUC-1021
S19049L502	49.50	65.00	11.00	10.00	PU	PUC-1154
S190506705	50.00	55.80	11.30	10.30	FKM	SUC-1991
S190503401	50.00	58.00	5.50	5.00	EPDM	SUC-2141
S19050L509	50.00	58.00	6.50	6.00	PU	PUC-640
S19050L510	50.00	58.00	9.00	8.00	PU	PUC-639
S19050L526	50.00	58.00	9.00	8.00	PU	PUC-880
S19050L511	50.00	58.00	11.00	10.00	PU	PUC-638
S190506609	50.00	58.00	11.40	10.40	FKM	SUC-2344
S19050L504	**50.00**	**58.00**	**12.50**	**11.50**	**PU**	**PUC-408**

Part No.	d (f8)	D (H9)	L (+0.2)	H	Material	Mould No.
S19050R303	50.00	60.00	5.50	5.00	PU	PUC-815
S19050L521	50.00	60.00	6.20	5.70	PU	PUC-779
S190506802	50.00	60.00	6.20	5.70	FKM/PTFE	SUC-2092
S190506603	50.00	60.00	6.50	6.00	FKM	SUC-1234
S19050L512	**50.00**	**60.00**	**6.50**	**6.00**	**PU**	**PUC-642**
S190501101	50.00	60.00	6.50	6.00	NBR	SUC-2291
S19050L512	**50.00**	**60.00**	**6.50**	**6.00**	**PU**	**PUC-1243**
S19050L535	50.00	60.00	7.00	6.50	PU	PUC-1040
S19050L541	50.00	60.00	7.50	7.00	PU	PUC-1304
S19050L506	50.00	60.00	7.50	7.00	PU	PUC-560
S19050L506	50.00	60.00	7.50	7.00	PU	PUC-355
S19050L501	50.00	60.00	7.80	7.30	PU	PUC-561
S19050L501	**50.00**	**60.00**	**7.80**	**7.30**	**PU**	**PUC-116**
S190506602	50.00	60.00	7.80	7.30	FKM	SUC-1200
S19050L542	50.00	60.00	7.80	7.30	PU	PUC-1306
S190501001	50.00	60.00	7.80	7.30	NBR	SUC-2380
S19050L508	50.00	60.00	8.00	7.50	PU	PUC-596
S19050R301	50.00	60.00	8.00	7.50	PU	PUC-682
S19050L530	50.00	60.00	8.00	7.50	PU	PUC-954
S19050L543	50.00	60.00	8.00	7.50	PU	PUC-1307
S190506604	50.00	60.00	9.00	8.00	FKM	SUC-1643
S19050L513	50.00	60.00	9.00	8.00	PU	PUC-641
S19050L503	50.00	60.00	11.00	10.00	PU	PUC-801
S19050L503	**50.00**	**60.00**	**11.00**	**10.00**	**PU**	**PUC-142**
S190506610	50.00	60.00	11.00	10.00	FKM	SUC-2360
S19050L537	50.00	60.00	12.50	11.50	PU	PUC-1141
S19050L524	50.00	60.00	13.00	12.00	PU	PUC-837
S190506706	50.00	62.00	11.00	10.00	FKM	SUC-2084
S19050L547	50.00	63.00	10.70	9.70	PU	PUC-1341
S190506704	50.00	63.00	11.00	10.00	FKM	SUC-1784
S19050L538	50.00	63.00	11.50	10.50	PU	PUC-1143
S190506714	50.00	65.00	7.50	7.00	FKM	SUC-2743
S19050L531	50.00	65.00	10.00	9.00	PU	PUC-955
S19050L544	50.00	65.00	11.00	10.00	PU	PUC-1308
S190506702	50.00	65.00	11.00	10.00	FKM	SUC-1611
S19050L502	**50.00**	**65.00**	**11.00**	**10.00**	**PU**	**PUC-486**
S19050R304	50.00	65.00	11.00	10.00	PU	PUC-814
S190506701	50.00	65.00	12.40	11.40	FKM	SUC-1316
S19050L505	**50.00**	**65.00**	**12.40**	**11.40**	**PU**	**PUC-409**
S19050L545	50.00	65.00	12.40	11.40	PU	PUC-1309
S19050L529	50.00	65.00	12.50	11.50	PU	PUC-960
S190506608	50.00	65.00	13.00	12.00	FKM	SUC-2060
S190506611	50.00	65.00	13.50	12.50	FKM	SUC-2650
S19050L532	50.00	65.00	14.00	13.00	PU	PUC-977
S19050L519	50.00	66.00	12.00	11.00	PU	PUC-774
S190506605	50.00	70.00	11.00	10.00	FKM	SUC-1897
S190508702	50.00	70.00	12.40	11.40	PU	PUC-1049
S19050L534	50.00	70.00	13.00	12.00	PU	PUC-1005
S19050L514	**50.00**	**70.00**	**13.00**	**12.00**	**PU**	**PUC-668**
S19050L523	50.00	75.00	13.00	12.00	PU	PUC-782
S190506713	50.80	60.32	7.50	7.00	FKM	SUC-2443
S19506601	50.80	63.00	6.50	6.00	FKM	SUC-1150

Bold sizes are readily available in stock.
Other materials are available on request.

S19

Single Acting Rod Seal

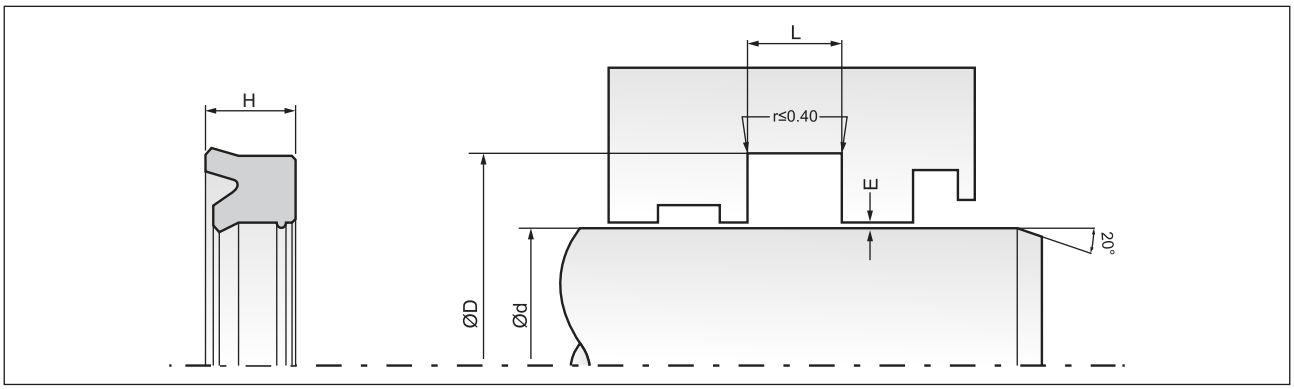

Part No.	d (f8)	D (H9)	L (+0.2)	H	Material	Mould No.
S19050L507	50.80	63.50	9.73	8.73	PU	PUC-522
S190506607	50.80	63.50	10.52	9.52	FKM	SUC-1972
S19050L515	50.80	63.50	10.52	9.52	PU	PUC-688
S19050L539	50.80	63.50	10.52	9.52	PU	PUC-1223
S19050L540	50.80	63.50	12.11	11.11	PU	PUC-1231
S19050L520	50.80	65.02	10.52	9.52	PU	PUC-776
S190518901	51.40	63.00	15.80	14.80	PU	PUC-689
S190518701	51.60	65.08	10.50	9.50	PU	PUC-899
S190521001	52.00	62.00	11.00	10.00	NBR	SUC-2580
S19052L501	52.00	64.00	10.50	9.50	PU	PUC-942
S19052L502	52.00	68.00	11.50	10.50	PU	PUC-1144
S19053L502	53.00	63.00	8.00	7.50	PU	PUC-1064
S19053L503	53.00	65.00	6.50	6.00	PU	PUC-1286
S19053L501	53.97	63.50	7.80	7.30	PU	PUC-820
S190546601	54.00	70.00	9.00	8.00	FKM	SUC-2458
S19055L517	55.00	63.00	12.40	11.40	PU	PUC-961
S190556601	55.00	63.00	13.00	12.00	FKM	SUC-2064
S19055L520	55.00	65.00	6.50	6.00	PU	PUC-953
S190556703	55.00	65.00	6.50	6.00	FKM	SUC-1721
S19055L507	55.00	65.00	6.50	6.00	PU	PUC-545
S19055L509	55.00	65.00	7.50	7.00	PU	PUC-646
S19055L525	55.00	65.00	7.50	7.00	PU	PUC-1305
S19055L506	**55.00**	**65.00**	**7.80**	**7.30**	**PU**	**PUC-474**
S19055L508	55.00	65.00	9.00	8.00	PU	PUC-647
S19055L510	55.00	65.00	11.00	10.00	PU	PUC-645
S190556603	55.00	65.00	11.00	10.00	FKM	SUC-2164
S19055L522	55.00	65.00	11.00	10.00	PU	PUC-1102
S190552001	55.00	65.00	11.00	10.00	CR	SUC-2732
S19055L512	55.00	67.00	11.00	10.00	PU	PUC-644
S19055L501	**55.00**	**68.00**	**11.00**	**10.00**	**PU**	**PUC-121**
S190556607	55.00	70.00	9.00	8.00	FKM	SUC-2459
S19055L519	55.00	70.00	10.00	9.00	PU	PUC-957
S19055L515	55.00	70.00	11.00	10.00	PU	PUC-664
S19055L518	55.00	70.00	12.40	11.40	PU	PUC-962
S190556701	55.00	70.00	12.50	11.50	FKM	SUC-1403
S19055R302	55.00	70.00	12.50	11.50	PU	PUC-589
S19055L503	**55.00**	**70.00**	**12.80**	**11.80**	**PU**	**PUC-130**
S19055L521	55.00	70.00	14.00	13.00	PU	PUC-978
S190556608	55.00	70.00	14.00	13.00	FKM	SUC-2693
S190556702	55.00	71.00	11.00	10.00	FKM	SUC-1555
S19055L513	55.00	72.00	11.00	10.00	PU	PUC-643
S19055L514	55.00	72.00	13.00	12.00	PU	PUC-625
S19055L511	55.00	75.00	13.00	12.00	PU	PUC-648
S190556609	55.00	75.00	13.00	12.00	FKM	SUC-2704
S19055L524	55.00	75.00	16.00	15.00	PU	PUC-1239
S190566716	56.00	64.00	13.00	12.00	FKM	SUC-1850
S190566717	56.00	64.50	11.00	10.00	FKM	SUC-1896
S190566607	56.00	65.00	6.80	6.30	FKM	SUC-2547
S190566608	56.00	65.00	11.00	10.00	FKM	SUC-2548
S190566722	56.00	66.00	5.80	5.30	FKM	SUC-2317
S190561003	56.00	66.00	6.70	6.20	NBR	SUC-2378
S19056R301	56.00	66.00	6.85	6.35	PU	PUC-810

Part No.	d (f8)	D (H9)	L (+0.2)	H	Material	Mould No.
S190566711	56.00	66.00	7.00	6.50	FKM	SUC-1544
S190566611	56.00	66.00	7.30	6.80	FKM	SUC-2781
S19056L504	56.00	66.00	7.50	7.00	PU	PUC-891
S19056L504	**56.00**	**66.00**	**7.50**	**7.00**	**PU**	**PUC-482**
S190566720	56.00	66.00	7.50	7.00	FKM	SUC-2114
S19056L5010	56.00	66.00	7.80	7.30	PU	PUC-991
S190L56L537	56.00	66.00	7.80	7.30	PU	PUC-1310
S190561106	56.00	66.00	8.00	7.50	NBR	SUC-2769
S190566712	56.00	66.00	11.00	10.00	FKM	SUC-1737
S19056L502	**56.00**	**66.00**	**11.00**	**10.00**	**PU**	**PUC-315**
S190566713	56.00	66.00	12.00	11.00	FKM	SUC-1931
S19056L510	56.00	66.00	12.00	11.00	PU	PUC-797
S190566713	56.00	66.00	12.00	11.00	FKM	SUC-1930
S19056L507	56.00	66.00	12.50	11.50	PU	PUC-708
S190566715	56.00	66.00	13.00	12.00	FKM	SUC-1844
S190566703	56.00	69.00	12.00	11.00	FKM	SUC-1182
S19056L513	56.00	70.00	10.50	9.50	PU	PUC-944
S190566721	56.00	70.00	12.00	11.00	FKM	SUC-2233
S190566719	56.00	70.00	13.00	12.00	FKM	SUC-2051
S19056L511	56.00	71.00	9.50	8.50	PU	PUC-809
S190566704	56.00	71.00	11.00	10.00	FKM	SUC-1432
S19056L503	**56.00**	**71.00**	**11.00**	**10.00**	**PU**	**PUC-410**
S19056L503	56.00	71.00	11.00	10.00	PU	PUC-1027
S190566723	56.00	71.00	12.00	11.00	FKM	SUC-2324
S19056L516	56.00	71.00	12.40	11.40	PU	PUC-1293
S19056L501	**56.00**	**71.00**	**12.50**	**11.50**	**PU**	**PUC-113**
S190566602	56.00	71.00	12.50	11.50	FKM	SUC-259
S19056L501	56.00	71.00	12.50	11.50	PU	PUC-802
S190566724	56.00	71.00	12.50	11.50	FKM	SUC-2501
S19056L506	56.00	71.00	12.80	11.80	PU	PUC-602
S19056L508	56.00	71.00	13.00	12.00	PU	PUC-748
S190566705	56.00	71.00	13.50	12.50	FKM	SUC-1451
S190561102	56.00	71.00	13.50	12.50	NBR	SUC-2293
S190566604	56.00	71.00	14.00	13.00	FKM	SUC-2034
S19056L505	56.00	72.00	11.00	10.00	PU	PUC-859
S190566707	56.00	72.00	12.00	11.00	FKM	SUC-1532
S190566610	56.00	76.00	14.00	13.00	FKM	SUD-2107
S19056L509	56.00	78.00	11.00	10.00	PU	PUD-660
S19057L501	57.00	67.00	10.00	9.00	PU	PUC-231
S19057L503	57.00	70.00	10.00	9.00	PU	PUC-659
S19057L506	57.15	66.67	9.50	8.50	PU	PUC-1441
S190576801	57.15	66.67	9.51	8.51	FKM	SUC-1575
S19057L504	57.15	69.85	10.00	9.00	PU	PUC-1149
S19057L505	57.15	69.85	10.40	9.40	PU	PUC-1222
S190578701	57.15	70.63	10.50	9.50	PU	PUC-898
S19057L502	57.50	68.50	7.50	7.00	PU	PUC-670
S190586602	58.00	74.00	9.40	8.40	FKM	SUC-2231
S19058L501	58.00	76.00	13.00	12.00	PU	PUD-553
S19059L501	59.00	70.00	11.00	10.00	PU	PUC-976
S19060L534	60.00	68.00	8.00	7.50	PU	PUC-1145
S19060L524	60.00	68.00	9.00	8.00	PU	PUC-963
S19060L523	60.00	68.00	12.50	11.50	PU	PUC-958

Bold sizes are readily available in stock.
Other materials are available on request.

S19

Single Acting Rod Seal

MAX SPARE LIMITED
QUALITY. PRECISION. SPEED.

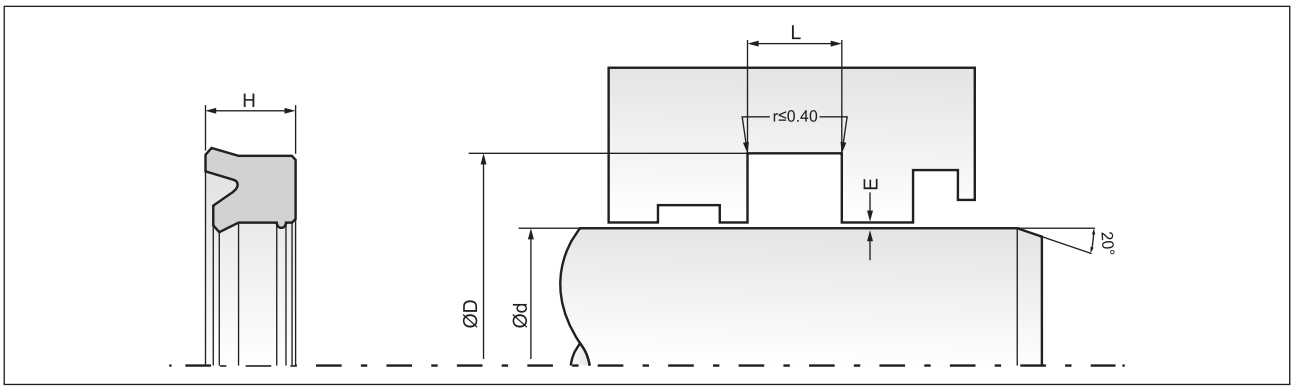

Part No.	d (f8)	D (H9)	L (+0.2)	H	Material	Mould No.
S19060L511	60.00	68.00	13.00	12.00	PU	PUC-584
S19060L537	60.00	68.00	13.00	12.00	PU	PUC-1198
S19060L519	60.00	68.00	14.00	13.00	PU	PUC-768
S19060L504	60.00	70.00	6.50	6.00	PU	PUC-649
S19060L521	60.00	70.00	7.50	7.00	PU	PUC-904
S190601001	60.00	70.00	7.80	7.30	NBR	SUC-675
S19060L501	**60.00**	**70.00**	**7.80**	**7.30**	**PU**	**PUC-132**
S19060S401	60.00	70.00	7.80	7.30	HNBR	SUC-2449
S190606610	60.00	70.00	8.00	7.50	FKM	SUC-2703
S19060L533	60.00	70.00	8.00	7.50	PU	PUC-1148
S190606301	60.00	70.00	9.00	8.00	FKM/FABRIC	SUC-2301
S190606608	60.00	70.00	9.00	8.00	FKM	SUC-2388
S19060L515	60.00	70.00	9.00	8.00	PU	PUC-658
S190606701	60.00	70.00	11.00	10.00	FKM	SUC-1490
S19060L506	**60.00**	**70.00**	**11.00**	**10.00**	**PU**	**PUC-411**
S19060R303	60.00	70.00	11.00	10.00	PU	PUC-744
S190601101	60.00	70.00	11.00	10.00	NBR	SUC-2494
S19060L538	60.00	70.00	11.00	10.00	PU	PUC-1311
S19060L535	60.00	70.00	11.50	10.50	PU	PUC-1147
S190606606	60.00	70.00	12.50	11.50	FKM	SUC-2252
S19060L522	60.00	70.00	12.50	11.50	PU	PUC-956
S19060L502	**60.00**	**70.00**	**12.80**	**11.80**	**PU**	**PUC-124**
S19060L518	60.00	70.00	13.00	12.00	PU	PUC-762
S19060L510	60.00	70.00	13.00	12.00	PU	PUC-543
S190606704	60.00	72.00	9.00	8.00	FKM	SUC-101
S190606609	60.00	72.00	10.00	9.00	FKM	SUC-2418
S19060L514	60.00	72.00	11.00	10.00	PU	PUC-667
S19060L531	60.00	72.00	15.00	14.00	PU	PUC-1069
S19060R304	60.00	73.00	11.00	10.00	PU	PUC-120
S190606602	60.00	73.00	12.00	11.00	FKM	SUC-1820
S190606703	60.00	74.00	10.75	9.75	FKM	SUC-1917
S19060L516	60.00	75.00	10.00	9.00	PU	PUC-680
S190606706	60.00	75.00	11.00	10.00	FKM	SUC-2077
S19060L525	60.00	75.00	11.00	10.00	PU	PUC-167
S190606702	60.00	75.00	12.00	11.00	FKM	SUC-1627
S19060L539	60.00	75.00	12.40	11.40	PU	PUC-1300
S19060L542	60.00	75.00	12.50	11.50	PU	PUC-1375
S190603402	60.00	75.00	12.80	11.80	EPDM	SUC-2599
S190606707	60.00	75.00	12.80	11.80	FKM	SUC-2198
S19060L508	**60.00**	**75.00**	**12.80**	**11.80**	**PU**	**PUC-159**
S19060L513	60.00	75.00	13.00	12.00	PU	PUC-666
S19060L540	60.00	75.00	13.00	12.00	PU	PUC-1301
S19060L527	60.00	75.00	14.00	13.00	PU	PUC-979
S190606601	60.00	75.00	16.00	15.00	FKM	SUC-1674
S19060L517	60.00	76.00	13.00	12.00	PU	PUD-587
S19060L530	60.00	80.00	11.00	10.00	PU	PUD-862
S190601102	60.00	80.00	11.00	10.00	NBR	SUD-2071
S19060L505	60.00	80.00	13.00	12.00	PU	PUD-130
S19061L401	61.00	71.00	7.80	7.30	PU	PUC-764
S190621001	62.86	73.66	6.85	6.35	NBR	SUC-1287
S19063L506	**63.00**	**70.00**	**13.00**	**12.00**	**PU**	**PUC-412**
S19063L548	63.00	71.00	9.00	8.00	PU	PUC-1187

Part No.	d (f8)	D (H9)	L (+0.2)	H	Material	Mould No.
S19063L509	63.00	71.50	8.00	7.50	PU	PUC-548
S19063L534	63.00	72.00	9.00	8.00	PU	PUC-567
S190636701	63.00	73.00	7.50	7.00	FKM	SUC-1389
S19063L533	63.00	73.00	7.80	7.30	PU	PUC-928
S190636611	63.00	73.00	7.80	7.30	FKM	SUC-2820
S19063L501	63.00	73.00	8.00	7.50	PU	PUC-749
S190636609	63.00	73.00	9.00	8.00	FKM	SUC-2795
S19063L537	63.00	73.00	10.00	9.00	PU	PUC-671
S19063L536	63.00	73.00	11.00	10.00	PU	PUC-624
S190638901	63.00	73.00	11.00	10.00	PU	PUC-715
S190636706	63.00	73.00	11.00	10.00	FKM	SUC-1884
S190631001	63.00	73.00	12.00	11.00	NBR	SUC-2379
S190636704	63.00	73.00	13.00	12.00	FKM	SUC-1766
S19063L505	**63.00**	**73.00**	**13.00**	**12.00**	**PU**	**PUC-345**
S190633401	63.00	73.00	13.00	12.00	EPDM	SUC-2598
S190636707	63.00	73.00	14.00	13.00	FKM	SUC-2196
S190636604	63.00	75.00	11.00	10.00	FKM	SUC-2354
S19063L502	**63.00**	**75.00**	**12.80**	**11.80**	**PU**	**PUC-117**
S190636602	63.00	75.00	12.80	11.80	FKM	SUC-2167
S19063L539	63.00	75.00	13.00	12.00	PU	PUC-783
S190636702	63.00	75.00	14.00	13.00	FKM	SUC-1759
S19063L546	63.00	75.00	15.00	14.00	PU	PUC-1046
S190636607	63.00	75.00	15.00	14.00	FKM	SUC-2719
S19063L535	63.00	76.00	8.80	7.80	PU	PUD-511
S190638702	63.00	76.00	10.50	9.50	PU	PUD-927
S190636610	63.00	76.00	15.50	14.50	FKM	SUD-2132
S19063L541	63.00	78.00	11.00	10.00	PU	PUD-808
S190636703	63.00	78.00	12.40	11.40	FKM	SUD-272
S19063L504	63.00	78.00	12.40	11.40	PU	PUD-698
S19063L504	**63.00**	**78.00**	**12.40**	**11.40**	**PU**	**PUD-121**
S190636705	63.00	78.00	12.50	11.50	FKM	SUD-1387
S19063L538	63.00	78.00	13.50	12.50	PU	PUD-678
S190636601	63.00	78.00	13.50	12.50	FKM	SUD-1475
S19063L543	63.50	73.02	8.80	7.80	PU	PUC-937
S19063L555	63.50	73.02	10.52	9.52	PU	PUC-1548
S190636606	63.50	74.60	8.90	7.90	FKM	SUC-2485
S19063L544	63.50	75.00	8.00	7.50	PU	PUC-969
S190636605	63.50	75.00	9.00	8.00	FKM	SUC-2479
S19063L552	63.50	76.20	6.85	6.35	PU	PUD-1052
S19063R302	63.50	76.20	8.92	7.92	PU	PUD-764
S190636711	63.50	76.20	8.94	7.94	FKM	SUD-2036
S190638701	63.50	76.20	10.00	9.00	PU	PUD-775
S190638704	63.50	76.20	10.40	9.40	PU	PUD-1009
S19063L510	63.50	76.20	10.48	9.48	PU	PUD-943
S190638703	63.50	76.20	10.50	9.50	PU	PUD-994
S190636710	63.50	76.20	10.50	9.50	FKM	SUD-1992
S19063L549	63.50	76.20	10.52	9.52	PU	PUD-1010
S19063L554	63.50	76.20	10.52	9.52	PU	PUD-1080
S19063L551	63.50	76.20	10.53	9.53	PU	PUD-1049
S19063L542	63.50	76.20	10.53	9.53	PU	PUD-807
S19063L550	63.50	76.20	13.70	12.70	PU	PUD-1019
S19063L508	63.50	79.00	10.00	9.00	PU	PUD-362

Bold sizes are readily available in stock.
Other materials are available on request.

S19

Single Acting Rod Seal

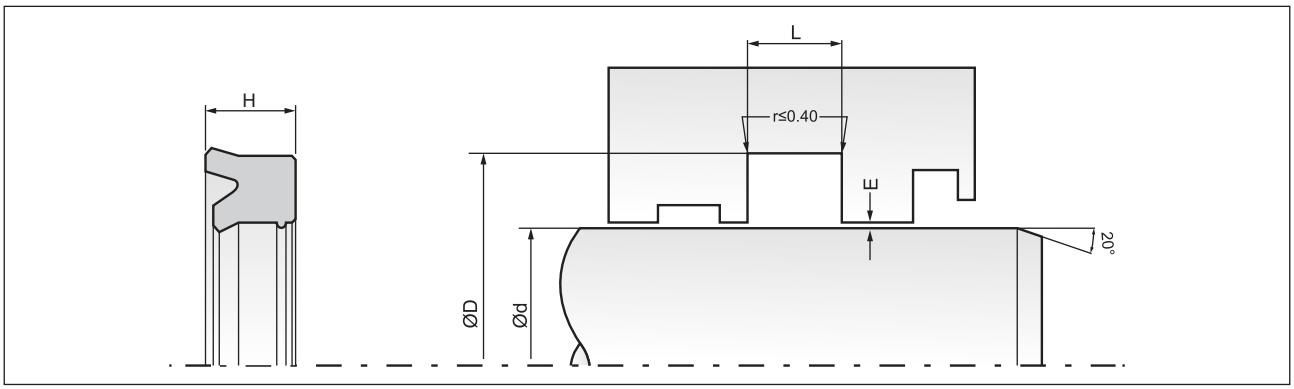

Part No.	d (f8)	D (H9)	L (+0.2)	H	Material	Mould No.
S19063R301	63.50	79.37	10.52	9.52	PU	PUD-712
S190630801	63.50	82.50	12.00	11.00	NBR	SUD-935
S190630801	63.50	82.50	12.00	11.00	NBR	SUD-1010
S19063L553	63.50	82.55	16.87	15.87	PU	PUD-1061
S19065L510	65.00	75.00	6.50	6.00	PU	PUC-669
S19065L511	65.00	75.00	7.80	7.30	PU	PUC-792
S19065L512	65.00	75.00	8.70	7.70	PU	PUC-835
S190656602	65.00	75.00	9.00	8.00	FKM	SUC-1857
S19065L501	65.00	75.00	11.00	10.00	PU	PUC-992
S19065L501	65.00	75.00	11.00	10.00	PU	PUC-551
S19065L507	65.00	75.00	12.50	11.50	PU	PUC-534
S19065L509	**65.00**	**75.00**	**13.00**	**12.00**	**PU**	**PUC-610**
S19065L514	65.00	76.00	10.50	9.50	PU	PUD-928
S19065L504	**65.00**	**80.00**	**10.00**	**9.00**	**PU**	**PUD-374**
S190656702	65.00	80.00	10.00	9.00	FKM	SUD-2077
S190656601	65.00	80.00	13.00	12.00	FKM	SUD-981
S19065L513	65.00	80.00	14.00	13.00	PU	PUD-823
S19065L503	**65.00**	**85.00**	**13.00**	**12.00**	**PU**	**PUD-122**
S190656603	65.00	85.00	13.00	12.00	FKM	SUD-1624
S190656701	65.00	85.00	14.00	13.00	FKM	SUD-2083
S19066L501	66.67	76.20	10.52	9.52	PU	PUD-877
S19068L508	68.00	78.00	7.00	6/6.50	PU	PUD-1067
S19068L507	68.00	78.00	7.50	7.00	PU	PUD-469
S190686601	68.00	85.00	13.00	12.00	FKM	SUD-1717
S19069L501	69.50	80.00	13.00	12.00	PU	PUD-577
S19070L519	70.00	78.00	9.00	8.00	PU	PUD-806
S190701001	70.00	80.00	6.00	5.50	NBR	SUD-1839
S19070L506	70.00	80.00	6.50	6.00	PU	PUD-448
S190706610	70.00	80.00	6.50	6.00	FKM	SUD-2137
S190706606	70.00	80.00	7.00	6.50	FKM	SUD-1904
S19070L510	**70.00**	**80.00**	**7.80**	**7.30**	**PU**	**PUD-141**
S190706713	70.00	80.00	7.80	7.30	FKM	SUD-1522
S19070L510	70.00	80.00	7.80	7.30	PU	PUD-769
S19070L524	70.00	80.00	8.00	7.50	PU	PUD-944
S190706712	70.00	80.00	9.00	8.00	FKM	SUD-1508
S19070L515	70.00	80.00	10.00	9.00	PU	PUD-554
S19070L512	70.00	80.00	11.00	10.00	PU	PUD-298
S19070L525	70.00	80.00	11.50	10.50	PU	PUD-945
S190701002	70.00	80.00	12.00	11.00	NBR	SUD-1847
S190706703	70.00	80.00	12.30	11.30	FKM	SUD-1158
S19070L518	70.00	80.00	12.50	11.50	PU	PUD-777
S19070L504	**70.00**	**80.00**	**13.00**	**12.00**	**PU**	**PUD-159**
S190706716	70.00	80.00	14.00	13.00	FKM	SUD-1707
S190706710	70.00	81.00	15.00	14.00	FKM	SUD-1447
S19070L521	70.00	82.00	9.60	8.60	PU	PUD-804
S190706704	70.00	82.00	10.00	9.00	FKM	SUD-1179
S190706707	70.00	82.00	12.00	11.00	FKM	SUD-1333
S190706719	70.00	82.00	15.00	14.00	FKM	SUD-1761
S19070L520	70.00	83.00	11.00	10.00	PU	PUD-805
S190706705	70.00	85.00	6.50	6.00	FKM	SUD-1272
S190701003	70.00	85.00	6.50	6.00	NBR	SUD-2060
S19070L514	70.00	85.00	9.00	8.00	PU	PUD-555

Part No.	d (f8)	D (H9)	L (+0.2)	H	Material	Mould No.
S19070L522	70.00	85.00	10.00	9.00	PU	PUD-811
S190706708	70.00	85.00	11.00	10.00	FKM	SUD-1362
S19070L511	**70.00**	**85.00**	**11.00**	**10.00**	**PU**	**PUD-495**
S190701101	70.00	85.00	11.00	10.00	NBR	SUD-1767
S190706709	70.00	85.00	12.00	11.00	FKM	SUD-1386
S19070L502	70.00	85.00	12.40	11.40	PU	PUD-485
S19070L502	**70.00**	**85.00**	**12.40**	**11.40**	**PU**	**PUD-116**
S190706601	70.00	85.00	12.40	11.40	FKM	SUD-438
S19070L502	70.00	85.00	12.40	11.40	PU	PUD-854
S19070R301	70.00	85.00	12.50	11.50	PU	PUD-509
S19070L507	70.00	85.00	12.50	11.50	PU	PUD-482
S190706602	70.00	85.00	12.50	11.50	FKM	SUD-1402
S190706715	70.00	85.00	12.50	11.50	FKM	SUD-1606
S19070L529	70.00	85.00	12.50	11.50	PU	PUD-1050
S19070L513	70.00	85.00	12.70	11.70	PU	PUD-520
S19070L508	70.00	85.00	13.00	12.00	PU	PUD-507
S190703501	70.00	85.00	13.00	12.00	EPDM	SUD-1935
S190701102	70.00	85.00	13.00	12.00	NBR	SUD-1934
S190706718	70.00	85.00	13.00	12.00	FKM	SUD-1757
S19070L509	70.00	85.00	13.50	12.50	PU	PUD-486
S190706714	70.00	85.00	13.50	12.50	FKM	SUD-1552
S19070L523	70.00	85.00	14.00	13.00	PU	PUD-824
S190706603	70.00	88.00	15.00	14.00	FKM	SUD-1610
S19070L516	70.00	90.00	13.00	12.00	PU	PUD-568
S19070L527	70.00	90.00	13.50	12.50	PU	PUD-951
S19070L528	70.00	90.00	15.00	14.00	PU	PUD-952
S190706711	70.00	90.00	17.00	16.00	FKM	SUD-1449
S190716702	71.00	80.00	5.50	5.00	FKM	SUD-2053
S190716703	71.00	80.00	7.50	7.00	FKM	SUD-2054
S190716701	71.00	91.00	13.00	12.00	FKM	SUD-1857
S19071L501	71.00	91.00	13.00	12.00	PU	PUD-530
S190726701	72.00	85.00	11.00	10.00	FKM	SUD-2039
S190726601	72.00	86.00	7.50	7.00	FKM	SUD-2037
S19075L503	75.00	83.00	12.50	11.50	PU	PUD-891
S19075L503	**75.00**	**83.00**	**12.50**	**11.50**	**PU**	**PUD-371**
S19075L514	75.00	84.00	5.80	5.30	PU	PUD-677
S19075L512	75.00	85.00	6.50	6.00	PU	PUD-567
S190756603	75.00	85.00	9.00	8.00	FKM	SUD-1880
S19075L510	75.00	85.00	11.00	10.00	PU	PUD-564
S19075L519	75.00	85.00	12.50	11.50	PU	PUD-1000
S19075L501	**75.00**	**85.00**	**13.00**	**12.00**	**PU**	**PUD-160**
S190756602	75.00	85.00	13.00	12.00	FKM	SUD-1683
S190756701	75.00	87.00	9.20	8.20	FKM	SUD-1818
S19075L517	75.00	87.00	9.60	8.60	PU	PUD-803
S19075L513	75.00	87.00	10.60	9.60	PU	PUD-670
S190756702	75.00	87.00	14.00	13.00	FKM	SUD-2124
S19075L511	75.00	88.00	11.00	10.00	PU	PUD-563
S19075L507	75.00	88.00	13.00	12.00	PU	PUD-556
S19075L516	75.00	90.00	10.00	9.00	PU	PUD-809
S190758701	75.00	90.00	11.00	10.00	PU	PUD-565
S19075R302	75.00	90.00	12.40	11.40	PU	PUD-1031
S19075L515	75.00	90.00	12.50	11.50	PU	PUD-810

Bold sizes are readily available in stock.
Other materials are available on request.

S19

Single Acting Rod Seal

MAX SPARE LIMITED
QUALITY. PRECISION. SPEED.

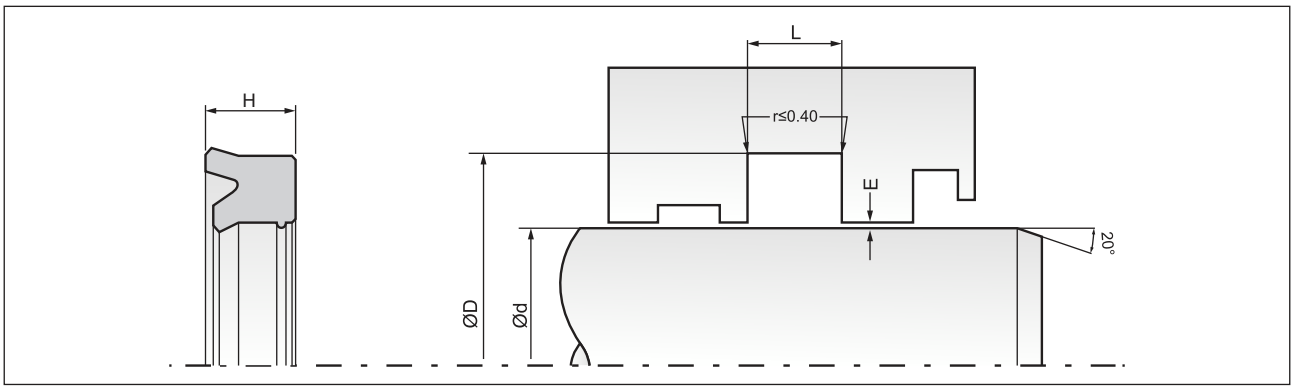

Part No.	d (f8)	D (H9)	L (+0.2)	H	Material	Mould No.
S19075L504	**75.00**	**90.00**	**13.00**	**12.00**	**PU**	**PUD-259**
S190756604	75.00	90.00	13.00	12.00	FKM	SUD-1895
S19075L518	75.00	90.00	14.00	13.00	PU	PUD-825
S190756601	75.00	90.00	14.00	13.00	FKM	SUD-1527
S190756605	75.00	95.00	11.00	10.00	FKM	SUD-2027
S19075L508	75.00	95.00	13.00	12.00	PU	PUD-566
S190751101	75.00	95.00	14.00	13.00	NBR	SUD-2134
S19076L502	76.00	89.00	10.50	9.50	PU	PUD-569
S19076L501	76.00	90.00	10.50	9.50	PU	PUD-562
S190761001	76.00	90.00	11.00	10.00	NBR	SUD-1999
S19076L503	76.20	88.90	10.52	9.52	PU	PUD-586
S19076L505	76.20	88.90	10.52	9.52	PU	PUD-1011
S19076L504	76.20	88.90	12.50	11.50	PU	PUD-763
S19078L501	78.00	86.00	10.00	9.00	PU	PUD-559
S19078L502	78.00	86.00	14.00	13.00	PU	PUD-666
S19078L503	78.00	86.00	14.50	13.50	PU	PUD-834
S19080L523	80.00	88.00	12.50	11.50	PU	PUD-802
S19080L511	80.00	90.00	6.50	6.00	PU	PUD-561
S19080L508	80.00	90.00	7.50	7.00	PU	PUD-426
S19080L529	80.00	90.00	8.00	7.50	PU	PUD-948
S19080L512	80.00	90.00	9.00	8.00	PU	PUD-560
S19080L518	80.00	90.00	10.00	9.00	PU	PUD-571
S190806609	80.00	90.00	10.00	9.00	FKM	SUD-1909
S190806610	80.00	90.00	11.00	10.00	FKM	SUD-2030
S19080L530	80.00	90.00	11.50	10.50	PU	PUD-947
S190801101	80.00	90.00	11.80	10.80	NBR	SUD-1373
S19080L531	80.00	90.00	12.50	11.50	PU	PUD-946
S190806606	80.00	90.00	13.00	12.00	FKM	SUD-1799
S19080L505	80.00	90.00	13.00	12.00	PU	PUD-771
S19080L505	**80.00**	**90.00**	**13.00**	**12.00**	**PU**	**PUD-370**
S190806608	80.00	90.00	16.00	15.00	FKM	SUD-1817
S19080L521	80.00	90.20	7.50	7.00	PU	PUD-773
S190806602	80.00	92.00	9.50	8.50	FKM	SUD-1403
S190808902	80.00	92.00	9.50	8.50	PU	PUD-1006
S19080L516	80.00	92.00	10.00	9.00	PU	PUD-570
S19080L513	80.00	93.00	11.00	10.00	PU	PUD-558
S19080L514	80.00	93.00	13.00	12.00	PU	PUD-557
S19080L524	80.00	95.00	10.00	9.00	PU	PUD-800
S19080L515	80.00	95.00	11.00	10.00	PU	PUD-552
S190806704	80.00	95.00	11.00	10.00	FKM	SUD-2133
S190806701	80.00	95.00	12.00	11.00	FKM	SUD-887
S190806702	80.00	95.00	12.40	11.40	FKM	SUD-1124
S190808701	80.00	95.00	12.40	11.40	PU	PUD-497
S19080L509	80.00	95.00	12.50	11.50	PU	PUD-508
S19080L502	**80.00**	**95.00**	**12.70**	**11.70**	**PU**	**PUD-118**
S190806604	80.00	95.00	12.70	11.70	FKM	SUD-1647
S19080L510	80.00	95.00	13.00	12.00	PU	PUD-516
S190801102	80.00	95.00	13.00	12.00	NBR	SUD-1933
S190803502	80.00	95.00	13.00	12.00	EPDM	SUD-1936
S190806703	80.00	95.00	14.00	13.00	FKM	SUD-1199
S19080L526	80.00	95.00	14.00	13.00	PU	PUD-826
S19080L525	80.00	100.00	11.00	10.00	PU	PUD-801

Part No.	d (f8)	D (H9)	L (+0.2)	H	Material	Mould No.
S190806601	80.00	100.00	13.00	12.00	FKM	SUD-1401
S19080L501	**80.00**	**100.00**	**13.00**	**12.00**	**PU**	**PUD-123**
S190806605	80.00	100.00	14.00	13.00	FKM	SUD-1739
S19080L503	**80.00**	**100.00**	**16.00**	**15.00**	**PU**	**PUD-369**
S190826701	82.55	95.25	10.52	9.52	FKM	SUD-1523
S19082C301	82.55	101.60	13.70	12.70	XNBR	SUE-925
S190821101	82.55	101.60	13.70	12.70	NBR	SUE-983
S19082L501	82.55	101.60	13.70	12.70	PU	PUE-652
S19083L501	83.00	95.00	11.00	10.00	PU	PUD-551
S19084L501	84.50	97.00	9.50	8.50	PU	PUD-851
S19085L517	85.00	93.00	12.50	11.50	PU	PUD-926
S19085L515	85.00	93.00	13.00	12.00	PU	PUD-812
S19085L509	85.00	95.00	6.50	6.00	PU	PUD-547
S19085L502	85.00	95.00	8.00	7.50	PU	PUD-950
S190856606	85.00	95.00	9.00	8.00	FKM	SUD-1809
S19085L510	85.00	95.00	9.00	8.00	PU	PUD-546
S19085L520	85.00	95.00	12.50	11.50	PU	PUD-1096
S19085L514	85.00	95.00	13.00	12.00	PU	PUD-813
S19085L518	85.00	97.00	9.50	8.50	PU	PUD-1046
S19085L512	85.00	97.00	9.70	8.70	PU	PUD-708
S190856604	85.00	98.00	11.00	10.00	FKM	SUD-1732
S19085L511	85.00	100.00	10.00	9.00	PU	PUD-608
S190856603	85.00	100.00	10.40	9.40	FKM	SUD-1726
S190856605	85.00	100.00	11.00	10.00	FKM	SUD-1804
S19085L519	85.00	100.00	11.00	10.00	PU	PUD-1051
S19085L508	85.00	100.00	11.00	10.00	PU	PUD-548
S19085L506	85.00	100.00	12.50	11.50	PU	PUD-476
S19085R301	85.00	100.00	12.50	11.50	PU	PUD-597
S19085L513	85.00	100.00	12.70	11.70	PU	CS-1591
S19085L501	**85.00**	**100.00**	**12.80**	**11.80**	**PU**	**PUD-129**
S19085L507	85.00	100.00	13.00	12.00	PU	PUD-550
S19085L516	85.00	100.00	14.00	13.00	PU	PUD-827
S190856608	85.00	100.00	14.00	13.00	FKM	SUD-1962
S19085L503	**85.00**	**105.00**	**13.00**	**12.00**	**PU**	**PUE-115**
S190856607	85.00	105.00	14.00	13.00	FKM	SUE-1309
S19087L501	87.00	95.00	11.00	10.00	PU	PUD-500
S19087L503	87.00	95.00	14.00	13.00	PU	PUD-833
S19087L502	87.00	96.00	11.00	10.00	PU	PUD-609
S190876601	87.50	97.50	13.00	12.00	FKM	SUD-1815
S19087L504	87.50	97.50	13.00	12.00	PU	PUD-1021
S19088L504	88.82	107.95	14.48	13.48	PU	PUE-553
S19088L506	88.90	101.60	10.52	9.52	PU	PUE-698
S19088R301	88.90	101.60	10.52	9.52	PU	PUE-509
S190886601	88.90	101.60	10.52	9.52	FKM	SUE-1029
S19088L502	88.90	101.62	10.52	9.52	PU	PUE-390
S19088L501	88.90	103.19	15.28	14.28	PU	PUE-320
S190881101	88.90	103.19	15.29	14.29	NBR	SUE-749
S19088L503	88.90	107.95	16.72	15.72	PU	PUE-511
S19090L526	90.00	98.00	9.00	8.00	PU	PUD-1018
S19090L510	90.00	100.00	7.00	6.50	PU	PUD-455
S190906607	90.00	100.00	8.00	7.50	FKM	SUD-1781
S19090L517	90.00	100.00	10.00	9.00	PU	PUD-644

Bold sizes are readily available in stock.
Other materials are available on request.

S19

Single Acting Rod Seal

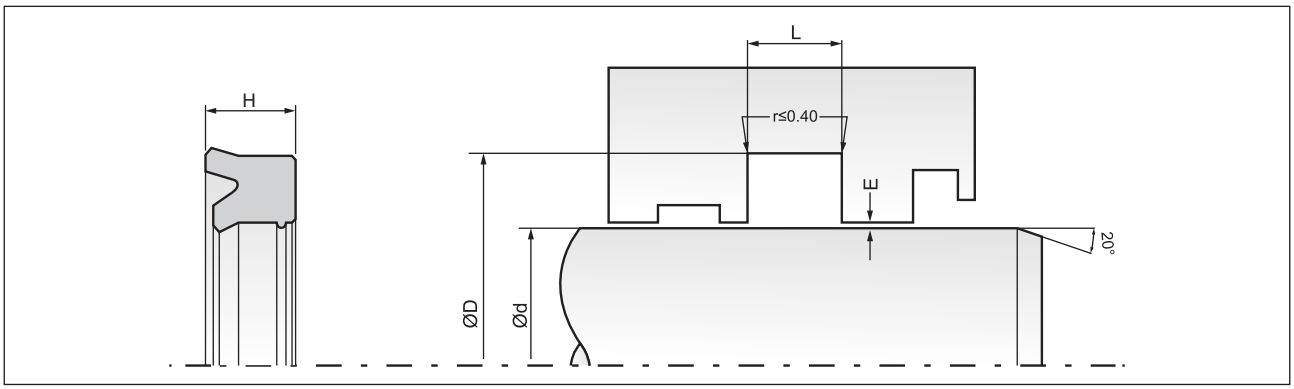

Part No.	d (f8)	D (H9)	L (+0.2)	H	Material	Mould No.
S19090L508	**90.00**	**100.00**	**11.00**	**10.00**	**PU**	**PUD-377**
S19090L505	**90.00**	**100.00**	**12.50**	**11.50**	**PU**	**PUD-372**
S190906710	90.00	100.00	12.50	11.50	FKM	SUD-1756
S19090L516	90.00	100.00	14.00	13.00	PU	PUD-549
S19090L506	90.00	102.00	10.00	9.00	PU	PUE-261
S190906707	90.00	102.00	11.00	10.00	FKM	SUE-1050
S190906612	90.00	102.20	13.00	12.00	FKM	SUE-1428
S19090L514	90.00	103.00	11.00	10.00	PU	PUE-384
S19090L511	90.00	103.00	13.00	12.00	PU	PUE-326
S190906613	90.00	104.50	12.50	11.50	FKM	SUE-1447
S190901101	90.00	105.00	5.50	5.00	NBR	SUE-748
S19090L509	**90.00**	**105.00**	**10.00**	**9.00**	**PU**	**PUE-308**
S19090L509	90.00	105.00	10.00	9.00	PU	PUE-500
S190906712	90.00	105.00	10.00	9.00	FKM	SUE-1243
S190906706	90.00	105.00	10.50	9.50	FKM	SUE-432
S190901103	90.00	105.00	11.00	10.00	NBR	SUE-1302
S19090L512	90.00	105.00	11.00	10.00	PU	PUE-349
S190906708	90.00	105.00	11.00	10.00	FKM	SUE-1069
S190906604	90.00	105.00	12.00	11.00	FKM	SUE-1117
S19090R301	90.00	105.00	12.30	11.30	PU	PUE-350
S19090L522	90.00	105.00	12.40	11.40	PU	PUE-342
S190906601	90.00	105.00	12.50	11.50	FKM	SUE-661
S190906702	90.00	105.00	12.50	11.50	FKM	SUE-288
S19090L503	**90.00**	**105.00**	**12.50**	**11.50**	**PU**	**PUE-121**
S19090L503	90.00	105.00	12.50	11.50	PU	PUE-463
S190903401	90.00	105.00	12.50	11.50	EPDM	SUE-1097
S19090L525	90.00	105.00	12.70	11.70	PU	PUE-543
S190906602	90.00	105.00	13.00	12.00	FKM	SUE-754
S19090L507	90.00	105.00	13.00	12.00	PU	PUE-162
S19090L518	90.00	105.00	13.50	12.50	PU	PUE-449
S190906605	90.00	105.00	13.50	12.50	FKM	SUE-1135
S190906705	90.00	105.00	14.00	13.00	FKM	SUE-985
S19090L524	90.00	105.00	14.00	13.00	PU	PUE-522
S190906709	90.00	106.00	10.50	9.50	FKM	SUE-1073
S190906704	90.00	107.00	12.50	11.50	FKM	SUE-818
S190906704	90.00	107.00	12.50	11.50	FKM	SUE-818
S19090L501	90.00	110.00	12.50	11.50	PU	PUE-590
S190901102	90.00	110.00	13.00	12.00	NBR	SUE-1193
S190906711	90.00	110.00	13.00	12.00	FKM	SUE-1191
S19090L502	**90.00**	**110.00**	**13.00**	**12.00**	**PU**	**PUE-114**
S19090L502	90.00	110.00	13.00	12.00	PU	PUE-505
S19090L519	90.00	110.00	16.00	15.00	PU	PUE-455
S190906603	90.00	115.00	12.00	11.00	FKM	SUE-1093
S19090L515	90.00	115.00	13.00	12.00	PU	PUE-392
S19091L501	91.00	99.00	9.50	8.50	PU	PUD-949
S19091L502	91.00	100.65	10.80	9.80	PU	PUE-694
S190921001	92.00	112.00	13.50	12.50	NBR	SUE-1304
S19095L508	95.00	103.00	12.50	11.50	PU	PUE-518
S19095L505	95.00	105.00	11.00	10.00	PU	PUE-388
S19095L503	95.00	105.00	13.50	12.50	PU	PUE-299
S19095L509	95.00	110.00	10.00	9.00	PU	PUE-519
S19095L506	95.00	110.00	11.00	10.00	PU	PUE-391

Part No.	d (f8)	D (H9)	L (+0.2)	H	Material	Mould No.
S19095L502	**95.00**	**110.00**	**13.00**	**12.00**	**PU**	**PUE-283**
S190956701	95.00	110.00	13.00	12.00	FKM	SUE-1286
S19095L510	95.00	110.00	14.00	13.00	PU	PUE-523
S190956601	95.00	110.00	14.00	13.00	FKM	SUE-1045
S19095R301	95.00	115.00	13.00	12.00	PU	PUE-403
S19095L501	**95.00**	**115.00**	**13.00**	**12.00**	**PU**	**PUE-111**
S190951101	95.25	104.65	7.30	6.80	NBR	SUE-870
S190951001	95.25	111.12	13.40	12.40	NBR	SUE-1041
S19097L505	97.00	105.00	12.50	11.50	PU	PUE-645
S19097L501	97.00	105.00	13.00	12.00	PU	PUE-348
S19097L502	97.00	105.00	14.00	13.00	PU	PUE-443
S19097L503	97.00	105.00	14.50	13.50	PU	PUE-531
S19098L501	98.00	108.00	8.00	7.50	PU	PUE-325
S19098L502	98.42	111.12	10.52	9.52	PU	PUE-636
S19099L502	99.00	109.00	15.00	14.00	PU	PUE-311
S19099L504	99.00	120.00	13.00	12.00	PU	PUE-679
S19099L505	99.00	120.00	15.50	14.50	PU	PUE-688
S19099L503	99.00	120.00	17.00	16.00	PU	PUE-429
S191008701	100.00	108.00	7.00	6.50	PU	PUE-680
S19100L511	100.00	108.00	12.50	11.50	PU	PUE-358
S191006703	100.00	115.00	6.50	6.00	FKM	SUE-1370
S19100L513	100.00	115.00	10.00	9.00	PU	PUE-382
S19100L518	100.00	115.00	10.40	9.40	PU	PUE-638
S19100L505	**100.00**	**115.00**	**11.00**	**10.00**	**PU**	**PUE-282**
S191006608	100.00	115.00	11.00	10.00	FKM	SUE-1362
S191001102	100.00	115.00	12.00	11.00	NBR	SUE-1425
S191006705	100.00	115.00	12.40	11.40	FKM	SUE-1438
S19100L514	100.00	115.00	12.50	11.50	PU	PUE-451
S191006602	100.00	115.00	12.80	11.80	FKM	SUE-768
S191006702	100.00	115.00	13.00	12.00	FKM	SUE-943
S19100L501	**100.00**	**115.00**	**13.00**	**12.00**	**PU**	**PUE-218**
S19100L516	100.00	115.00	14.00	13.00	PU	PUE-524
S191006601	100.00	120.00	13.00	12.00	FKM	SUE-647
S19100L504	**100.00**	**120.00**	**13.00**	**12.00**	**PU**	**PUE-105**
S191001101	100.00	120.00	13.50	12.50	NBR	SUE-1084
S19100R301	100.00	120.00	15.00	14.00	PU	PUE-352
S19100L503	**100.00**	**120.00**	**15.50**	**14.50**	**PU**	**PUE-226**
S191006603	100.00	120.00	15.50	14.50	FKM	SUE-836
S19100L503	100.00	120.00	15.50	14.50	PU	PUE-501
S191006701	100.00	120.00	16.00	15.00	FKM	SUE-867
S19100L512	100.00	120.00	16.00	15.00	PU	PUE-387
S19100R302	100.00	120.00	16.00	15.00	PU	PUE-473
S19100L508	100.00	120.00	17.00	16.00	PU	PUE-453
S19100L515	100.00	125.00	13.00	12.00	PU	PUE-454
S19101L504	101.60	111.12	10.52	9.52	PU	PUE-558
S19101R301	101.60	114.30	10.52	9.52	PU	PUE-510
S19101L503	101.60	117.42	15.28	14.28	PU	PUE-555
S191036701	103.00	115.00	9.00	8.00	FKM	SUE-1137
S191036702	103.00	118.00	9.00	8.00	FKM	SUE-1328
S19103C301	103.00	119.00	9.50	8.50	XNBR	SUE-1109
S19105L513	105.00	113.00	9.00	8.00	PU	PUE-646
S19105L505	105.00	115.00	12.50	11.50	PU	PUE-517

Bold sizes are readily available in stock.
Other materials are available on request.

S19

Single Acting Rod Seal

MAX SPARE LIMITED
QUALITY. PRECISION. SPEED.

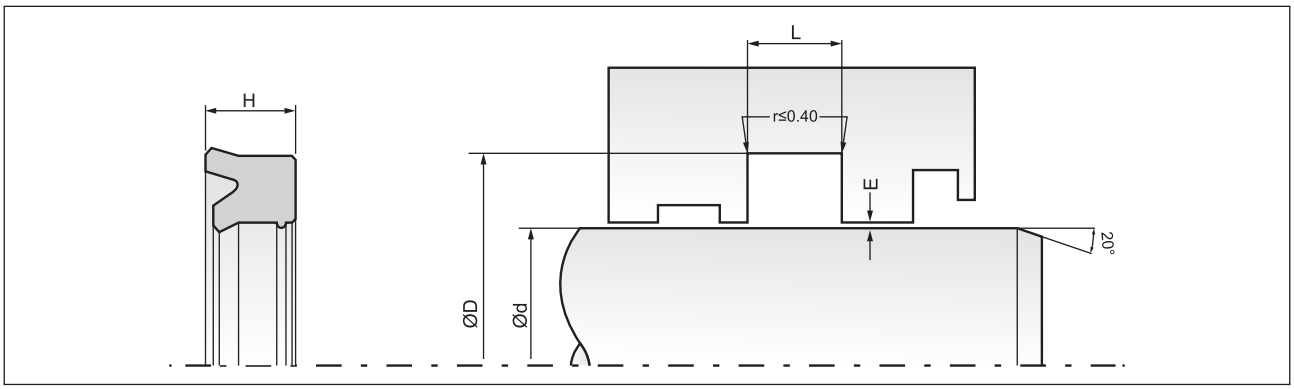

Part No.	d (f8)	D (H9)	L (+0.2)	H	Material	Mould No.
S19105L506	105.00	117.00	10.40	9.40	PU	PUE-513
S191056701	105.00	120.00	10.00	9.00	FKM	SUE-954
S19105L501	**105.00**	**120.00**	**10.00**	**9.00**	**PU**	**PUE-147**
S19105L509	105.00	120.00	11.00	10.00	PU	PUE-534
S19105L511	105.00	120.00	11.50	10.50	PU	PUE-589
S19105L511	105.00	120.00	12.40	11.40	PU	PUE-544
S19105L503	105.00	120.00	13.00	12.00	PU	PUE-389
S19105L504	105.00	120.00	17.00	16.00	PU	PUE-410
S191056702	105.00	120.00	17.00	16.00	FKM	SUE-957
S19105L514	105.00	125.00	11.00	10.00	PU	PUE-656
S19105L502	105.00	125.00	12.50	11.50	PU	PUE-591
S19105L510	105.00	125.00	16.00	15.00	PU	PUE-536
S19107C301	107.95	127.00	13.70	12.70	XNBR	SUF-641
S191086701	108.50	133.00	16.00	15.00	FKM	SUF-981
S19110L509	110.00	119.00	5.80	5.30	PU	PUE-359
S19110L516	110.00	120.00	11.50	10.50	PU	PUE-588
S19110L514	110.00	120.00	12.50	11.50	PU	PUE-575
S19110L503	110.00	125.00	10.00	9.00	PU	PUE-535
S19110L505	110.00	125.00	10.60	9.60	PU	PUE-526
S19110L505	**110.00**	**125.00**	**10.60**	**9.60**	**PU**	**PUE-285**
S191106606	110.00	125.00	10.60	9.60	FKM	SUE-1250
S19110L511	110.00	125.00	11.00	10.00	PU	PUE-383
S191106604	110.00	125.00	11.90	10.90	FKM	SUE-1170
S191106711	110.00	125.00	12.40	11.40	FKM	SUE-1437
S19110L504	**110.00**	**125.00**	**12.40**	**11.40**	**PU**	**PUE-284**
S191106602	110.00	125.00	12.50	11.50	FKM	SUE-770
S19110L512	110.00	125.00	13.00	12.00	PU	PUE-386
S191106706	110.00	125.00	13.00	12.00	FKM	SUE-1086
S19110L507	110.00	125.00	14.00	13.00	PU	PUE-336
S191106702	110.00	125.00	15.50	14.50	FKM	SUE-882
S19110L501	110.00	125.00	16.00	15.00	PU	PUE-159
S191106703	110.00	125.00	17.00	16.00	FKM	SUE-938
S19110L515	110.00	130.00	12.50	11.50	PU	PUF-443
S19110L508	**110.00**	**130.00**	**13.00**	**12.00**	**PU**	**PUF-123**
S191106603	110.00	130.00	15.00	14.00	FKM	SUF-811
S19110L502	**110.00**	**130.00**	**15.50**	**14.50**	**PU**	**PUF-112**
S191106708	110.00	130.00	15.50	14.50	FKM	SUF-831
S191106607	110.00	130.00	15.60	14.60	FKM	SUF-923
S19110L510	110.00	130.00	16.00	15.00	PU	PUF-308
S191106704	110.00	130.00	17.00	16.00	FKM	SUF-722
S191106601	110.00	130.00	19.00	18.00	FKM	SUF-527
S191106709	110.00	138.00	15.50	14.50	FKM	SUF-976
S191106707	110.00	138.00	15.50	14.50	FKM	SUF-812
S19111L501	111.00	120.65	10.50	9.50	PU	PUE-647
S19111L502	111.00	121.00	11.50	10.50	PU	PUE-692
S19112L501	112.00	120.00	11.00	10.00	PU	PUE-343
S19112L502	112.00	125.00	13.00	12.00	PU	PUE-385
S19113L501	113.00	122.00	11.00	10.00	PU	PUE-412
S191141101	114.00	135.00	21.00	20.00	NBR	SUF-866
S191141102	114.00	135.00	26.00	25.00	NBR	SUF-865
S191156601	115.00	125.00	13.00	12.00	FKM	SUE-1253
S19115L501	**115.00**	**130.00**	**11.00**	**10.00**	**PU**	**PUF-228**

Part No.	d (f8)	D (H9)	L (+0.2)	H	Material	Mould No.
S19115L505	115.00	130.00	14.00	13.00	PU	PUF-402
S19115L502	115.00	130.00	17.00	16.00	PU	PUF-241
S19115L503	115.00	135.00	13.00	12.00	PU	PUF-257
S19115L504	115.00	135.00	16.00	15.00	PU	PUF-306
S19116L501	116.00	124.70	9.00	8.00	PU	PUE-437
S191171101	117.47	136.52	13.70	12.70	NBR	SUF-707
S19118L503	118.00	126.00	14.00	13.00	PU	PUF-353
S19118L504	118.00	126.00	14.50	13.50	PU	PUF-406
S19118L502	118.00	133.00	11.00	10.00	PU	PUF-303
S19120L508	120.00	129.00	5.80	5.30	PU	PUF-357
S191206603	120.00	130.00	12.50	11.50	FKM	SUF-619
S19120L504	120.00	130.00	15.00	14.00	PU	PUF-251
S19120R301	120.00	130.00	15.30	14.30	PU	PUF-368
S191201102	120.00	132.00	17.00	16.00	NBR	SUF-797
S191206602	120.00	133.00	12.00	11.00	FKM	SUF-580
S191206703	120.00	135.00	11.00	10.00	FKM	SUF-911
S19120L505	120.00	135.00	13.00	12.00	PU	PUF-310
S191201101	120.00	135.00	19.00	18.00	NBR	SUF-522
S19120L512	120.00	136.00	19.00	18.00	PU	PUF-436
S19120L506	120.00	140.00	13.00	12.00	PU	PUF-301
S19120L502	**120.00**	**140.00**	**15.50**	**14.50**	**PU**	**PUF-111**
S191206702	120.00	140.00	15.50	14.50	FKM	SUF-833
S19120L508	120.00	140.00	15.60	14.60	PU	PUF-399
S19120L507	120.00	140.00	16.00	15.00	PU	PUF-302
S191206604	120.00	140.00	16.00	15.00	FKM	SUF-827
S19120L513	120.00	140.00	17.00	16.00	PU	PUF-507
S191206601	120.00	140.00	17.00	16.00	FKM	SUF-589
S191201001	120.00	140.00	17.00	16.00	NBR	SUF-716
S19120L511	120.65	130.17	10.52	9.52	PU	PUF-423
S19125L508	125.00	133.00	11.00	10.00	PU	PUF-384
S19125L511	125.00	133.00	11.90	10.90	PU	PUF-446
S19125L509	125.00	133.00	12.50	11.50	PU	PUF-398
S19125L505	125.00	135.00	15.00	14.00	PU	PUF-311
S191256608	125.00	137.00	15.50	14.50	FKM	SUF-968
S19125L507	125.00	140.00	11.00	10.00	PU	PUF-304
S191256606	125.00	140.00	11.80	10.80	FKM	SUF-888
S191256602	125.00	140.00	12.00	11.00	FKM	SUF-841
S19125L512	125.00	140.00	12.40	11.40	PU	PUF-495
S19125L510	125.00	140.00	12.50	11.50	PU	PUF-444
S19125L506	125.00	140.00	13.00	12.00	PU	PUF-312
S19125L513	125.00	145.00	9.00	8.00	PU	PUF-508
S191256601	125.00	145.00	13.00	12.00	FKM	SUF-610
S191256603	125.00	145.00	13.50	12.50	FKM	SUF-843
S19125L501.	125.00	145.00	15.50	14.50	PU	PUF-483
S191256605	125.00	145.00	15.50	14.50	FKM	SUF-887
S19125L501	**125.00**	**145.00**	**15.50**	**14.50**	**PU**	**PUF-110**
S19125L504	125.00	145.00	16.00	15.00	PU	PUF-307
S191256604	125.00	145.00	17.00	16.00	FKM	SUF-860
S19125L502	**125.00**	**150.00**	**14.00**	**13.00**	**PU**	**PUF-227**
S19125L502	**125.00**	**150.00**	**14.00**	**13.00**	**PU**	**PUF-388**
S191276701	127.00	139.70	16.87	15.87	FKM	SUF-499
S191276702	127.00	140.00	10.00	9.00	FKM	SUF-877

Bold sizes are readily available in stock.
Other materials are available on request.

S19

Single Acting Rod Seal

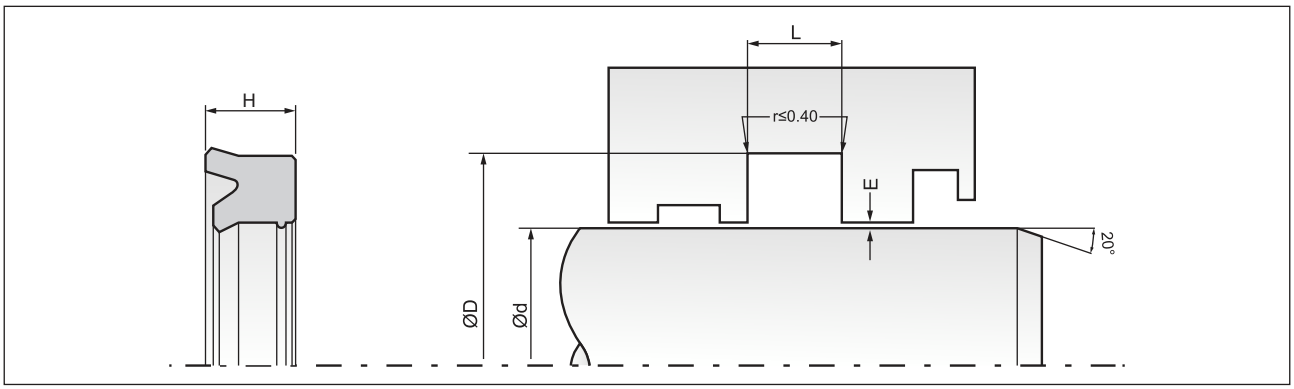

Part No.	d (f8)	D (H9)	L (+0.2)	H	Material	Mould No.
S191276703	127.00	140.00	15.50	14.50	FKM	SUF-1006
S19127L501	127.00	146.05	12.11	11.11	PU	PUF-256
S19127L502	127.00	158.75	15.85	14.85	PU	PUG-311
S19129L501	129.00	141.00	10.40	9.40	PU	PUF-396
S19130L510	130.00	140.00	7.50	7.00	PU	PUF-439
S19130L501	130.00	140.00	11.50	10.50	PU	PUF-445
S191306601	130.00	145.00	10.00	9.00	FKM	SUF-883
S19130L506	130.00	145.00	11.00	10.00	PU	PUF-305
S19130L507	130.00	145.00	13.00	12.00	PU	PUF-340
S191306703	130.00	150.00	13.00	12.00	FKM	SUF-932
S19130L508	130.00	150.00	13.50	12.50	PU	PUF-124
S19130L504	130.00	150.00	14.00	13.00	PU	PUF-271
S19130L502	**130.00**	**150.00**	**15.50**	**14.50**	**PU**	**PUF-109**
S191306702	130.00	150.00	15.50	14.50	FKM	SUF-832
S19130L505	130.00	150.00	16.00	15.00	PU	PUF-272
S191306701	130.00	150.00	16.30	15.30	FKM	SUF-678
S19131L501	131.00	140.65	10.80	9.80	PU	PUF-480
S19135L503	**135.00**	**143.00**	**13.50**	**12.50**	**PU**	**PUF-226**
S19135L505	135.00	143.70	9.00	8.00	PU	PUF-350
S19135L401	135.00	149.00	8.80	7.80	PU	PUF-351
S19135L502	**135.00**	**150.00**	**12.40**	**11.40**	**PU**	**PUF-224**
S191356701	135.00	155.00	17.00	16.00	FKM	SUG-708
S19135L504	135.00	155.00	21.00	20.00	PU	PUG-240
S19137L501	137.30	160.00	16.50	15.50	PU	PUG-292
S19139L504	139.70	149.22	10.52	9.52	PU	PUF-422
S19139L503	139.70	152.40	15.28	14.28	PU	PUG-279
S19139L502	139.70	152.40	17.00	16.00	PU	PUG-220
S19140L503	**140.00**	**150.00**	**6.50**	**6.00**	**PU**	**PUF-225**
S19140L505	140.00	150.00	7.50	7.00	PU	PUF-264
S19140L512	140.00	150.00	14.00	13.00	PU	PUF-424
S191406703	140.00	152.00	15.00	14.00	FKM	SUG-518
S19140L506	140.00	155.00	11.00	10.00	PU	PUG-208
S19140L504	**140.00**	**155.00**	**14.00**	**13.00**	**PU**	**PUG-180**
S19140L511	140.00	160.00	13.00	12.00	PU	PUG-316
S19140L501	140.00	160.00	13.50	12.50	PU	PUG-354
S19140L507	140.00	160.00	14.00	13.00	PU	PUG-238
S191401106	140.00	160.00	15.00	14.00	NBR	SUG-763
S19140L502	**140.00**	**160.00**	**15.50**	**14.50**	**PU**	**PUG-108**
S191406601	140.00	160.00	15.50	14.50	FKM	SUG-838
S19140S401	140.00	160.00	16.00	15.00	HNBR	SUG-682
S19140L508	140.00	160.00	17.00	16.00	PU	PUG-237
S191406701	140.00	160.00	17.00	16.00	FKM	SUG-485
S19143L501	143.00	151.00	14.00	13.00	PU	PUG-276
S19143L502	143.00	151.00	14.50	13.50	PU	PUG-321
S19145L503	**145.00**	**153.00**	**12.50**	**11.50**	**PU**	**PUG-150**
S191456601	145.00	160.00	10.00	9.00	FKM	SUG-754
S19145L504	145.00	160.00	10.00	9.00	PU	PUG-201
S19145L501	145.00	160.00	11.00	10.00	PU	PUG-190
S191456701	145.00	160.00	12.50	11.50	FKM	SUG-778
S19145L505	145.00	160.00	15.60	14.60	PU	PUG-356
S19150L506	150.00	160.00	12.50	11.50	PU	PUG-353
S19150L505	150.00	162.00	15.00	14.00	PU	PUG-314

Part No.	d (f8)	D (H9)	L (+0.2)	H	Material	Mould No.
S19150L503	150.00	165.00	13.00	12.00	PU	PUG-239
S19150L507	150.00	170.00	11.00	10.00	PU	PUG-394
S19150L501	**150.00**	**170.00**	**15.50**	**14.50**	**PU**	**PUG-111**
S19150L504	150.00	170.00	17.00	16.00	PU	PUG-264
S19151L501	151.00	160.65	10.80	9.80	PU	PUG-391
S19152L502	152.00	160.00	12.50	11.50	PU	PUG-392
S19152L501	152.00	164.00	10.40	9.40	PU	PUG-310
S19152L501	152.40	171.45	13.70	12.70	PU	PUG-281
S19154L501	154.00	162.70	9.00	8.00	PU	PUG-271
S19155L501	155.00	170.00	10.00	9.00	PU	PUG-243
S191556601	155.00	170.00	15.50	14.50	FKM	SUG-793
S191558701	155.00	175.00	13.00	12.00	PU	PUG-299
S19160L504	160.00	170.00	13.50	12.50	PU	PUG-263
S19160L505	160.00	172.00	15.00	14.00	PU	PUG-318
S19160L509	160.00	172.00	15.00	14.00	PU	PUG-386
S19160L508	160.00	176.00	19.00	18.00	PU	PUH-270
S19160L510	160.00	180.00	10.30	9.30	PU	PUH-307
S19160L502	160.00	180.00	13.00	12.00	PU	PUH-185
S19160L401	160.00	180.00	13.00	12.00	PU	PUH-237
S19160L501	**160.00**	**180.00**	**15.50**	**14.50**	**PU**	**PUH-107**
S191606704	160.00	180.00	15.50	14.50	FKM	SUH-486
S191606601	160.00	180.00	15.60	14.60	FKM	SUH-325
S191606703	160.00	180.00	16.00	15.00	FKM	SUH-367
S19160L503	160.00	180.00	17.00	16.00	PU	PUH-186
S191606602	160.00	180.00	17.00	16.00	FKM	SUH-477
S191606603	160.00	185.00	17.00	16.00	FKM	SUH-501
S19161L501	161.92	174.62	10.52	9.52	PU	PUG-335
S19162L503	162.00	172.00	15.00	14.00	PU	PUG-195
S19165L501	**165.00**	**190.00**	**16.00**	**15.00**	**PU**	**PUH-157**
S19170L505	170.00	190.00	13.00	12.00	PU	PUH-187
S19170L501	**170.00**	**190.00**	**15.50**	**14.50**	**PU**	**PUH-108**
S19170L506	170.00	190.00	17.00	16.00	PU	PUH-188
S19170L504	170.00	195.00	10.60	9.60	PU	PUH-180
S19170L507	170.00	195.00	21.00	20.00	PU	PUH-200
S19170L502	**170.00**	**200.00**	**16.00**	**15.00**	**PU**	**PUH-158**
S19170L509	170.00	210.00	16.00	15.00	PU	PUJ-263
S19171L501	171.00	179.00	14.00	13.00	PU	PUH-190
S19171L502	171.00	181.70	12.00	11.00	PU	PUH-302
S191721001	172.00	192.00	13.00	12.00	NBR	SUH-352
S19174L501	174.00	182.70	9.00	8.00	PU	PUH-220
S19177L501	177.80	196.85	10.52	9.52	PU	PUH-223
S191796601	179.00	195.00	19.00	18.00	FKM	SUH-469
S19180R301	180.00	190.00	12.40	11.40	PU	PUH-235
S19180L510	180.00	192.80	10.40	9.40	PU	PUH-264
S19180L512	180.00	200.00	12.50	11.50	PU	PUH-281
S19180L503	**180.00**	**200.00**	**15.50**	**14.50**	**PU**	**PUH-159**
S19180S401	180.00	200.00	16.00	15.00	HNBR	SUH-442
S19180L508	180.00	200.00	16.00	15.00	PU	PUH-255
S19180L511	180.00	200.00	16.50	15.50	PU	PUH-282
S19180L507	180.00	200.00	17.00	16.00	PU	PUH-250
S191806701	180.00	200.00	17.00	16.00	FKM	SUH-346
S19180L502	**180.00**	**205.00**	**16.00**	**15.00**	**PU**	**PUJ-101**

Bold sizes are readily available in stock.
Other materials are available on request.

S19

Single Acting Rod Seal

MAX SPARE LIMITED
QUALITY. PRECISION. SPEED.

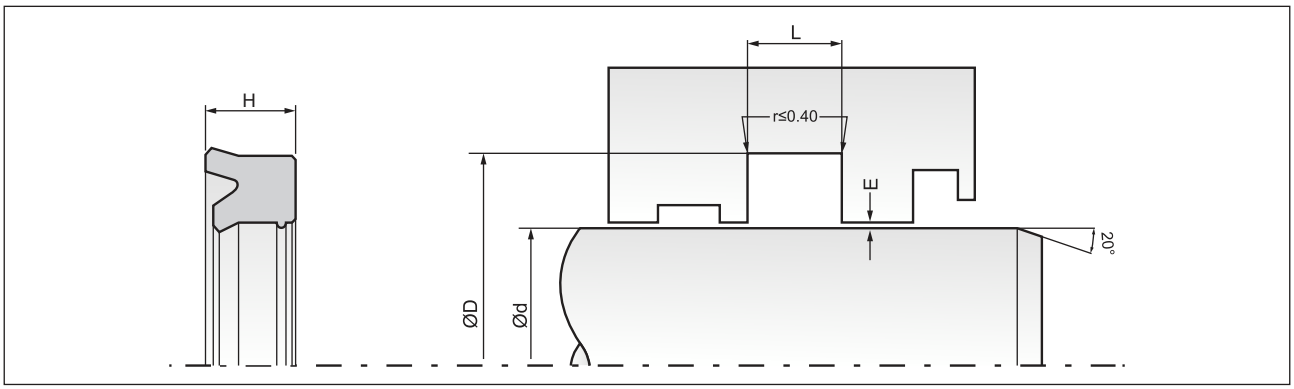

Part No.	d (f8)	D (H9)	L (+0.2)	H	Material	Mould No.
S19180L401	180.00	205.00	17.00	16.00	PU	PUJ-202
S19180L509	180.00	205.00	17.00	16.00	PU	PUJ-182
S19180L505	180.00	210.00	19.00	18.00	PU	PUJ-189
S19184L401	184.15	203.20	16.87	15.87	PU	PUJ-197
S19184R301	184.15	203.20	16.87	15.87	PU	PUJ-201
S191856701	185.00	200.00	18.50	17.50	FKM	SUH-425
S19185L501	185.00	205.00	15.50	14.50	PU	PUJ-212
S19185L503	185.00	205.00	16.00	15.00	PU	PUJ-228
S191906701	190.00	210.00	15.60	14.60	FKM	SUJ-415
S19190L502	190.00	215.00	19.00	18.00	PU	PUJ-171
S19194L501	194.00	204.70	12.00	11.00	PU	PUJ-249
S19195L501	195.00	215.00	16.00	15.00	PU	PUJ-279
S19196L501	196.00	204.70	9.00	8.00	PU	PUJ-194
S19200L504	200.00	215.00	12.00	11.00	PU	PUJ-206
S192006605	200.00	216.00	16.00	15.00	FKM	SUJ-424
S192006606	200.00	216.00	19.00	18.00	FKM	SUJ-440
S19200L501	**200.00**	**220.00**	**15.50**	**14.50**	**PU**	**PUJ-108**
S19200L505	200.00	220.00	16.00	15.00	PU	PUJ-264
S192006604	200.00	225.00	16.00	15.00	FKM	SUJ-395
S19200R301	200.00	225.00	16.00	15.00	PU	PUJ-174
S19200L502	**200.00**	**225.00**	**17.00**	**16.00**	**PU**	**PUJ-151**
S192006601	200.00	225.00	17.00	16.00	FKM	SUJ-278
S192006603	200.00	226.00	17.00	16.00	FKM	SUK-300
S19200Q201	200.00	226.00	19.00	18.00	PU	PUK-171
S19209L501	209.55	222.25	15.28	14.28	PU	PUJ-198
S19210L501	210.00	225.00	17.00	16.00	PU	PUJ-161
S19210L502	210.00	230.00	13.00	12.00	PU	PUK-151
S19210L504	210.00	230.00	16.00	15.00	PU	PUK-158
S19210R301	210.00	235.00	17.00	16.00	PU	PUK-166
S19212L501	212.00	224.00	10.40	9.40	PU	PUJ-225
S19220L503	220.00	230.00	16.00	15.00	PU	PUK-198
S19220L501	**220.00**	**250.00**	**24.00**	**23.00**	**PU**	**PUK-130**
S19220L502	220.00	250.00	30.70	29.70	PU	PUK-174
S19224D601	224.50	243.20	10.80	9.80	HNBR	SUK-283
S19225L501	225.00	245.00	16.00	15.00	PU	PUK-134
S19228C301	228.60	247.65	13.70	12.70	XNBR	SUK-256
S19230L501	230.00	260.00	16.00	15.00	PU	PUM-376
S19245L501	245.00	255.00	16.00	15.00	PU	PUM-375
S192506701	250.00	270.00	17.00	16.00	FKM	SUM-631

Part No.	d (f8)	D (H9)	L (+0.2)	H	Material	Mould No.
S19250L502	250.00	275.00	19.00	18.00	PU	PUM-226
S19250L503	250.00	275.00	20.00	19.00	PU	PUM-231
S192506601	250.00	275.00	21.00	20.00	FKM	SUM-775
S19250L501	**250.00**	**280.00**	**24.00**	**23.00**	**PU**	**PUM-147**
S19260L502	260.00	280.00	15.60	14.60	PU	PUM-251
S19260L501	260.00	280.00	16.00	15.00	PU	PUM-248
S19270L501	270.00	285.00	7.30	6.80	PU	PUM-143
S192791102	279.40	298.45	13.70	12.70	NBR	SUM-623
S19280L503	280.00	296.00	19.00	18.00	PU	PUM-300
S192806701	280.00	300.00	17.00	16.00	FKM	SUM-506
S19280L501	280.00	310.00	20.00	19.00	PU	PUM-275
S19290L501	290.00	305.00	14.00	13.00	PU	PUM-256
S192986601	298.00	310.00	9.00	8.00	FKM	SUM-626
S19300L501	300.00	340.00	19.00	18.00	PU	PUM-195
S193156002	315.00	355.00	27.00	26.00	PU	CPU-138
S19315L501	315.00	355.00	33.50	32.50	PU	PUM-266
S19316D601	316.50	335.16	10.80	9.80	HNBR	SUM-666
S19320L502	320.00	340.00	15.60	14.60	PU	PUM-142
S19320L501	320.00	340.00	17.00	16.00	PU	WPH-1468
S193386601	338.00	350.00	9.00	8.00	FKM	SUM-627
S193406601	340.00	364.00	24.00	23.00	FKM	SUM-665
S19340R301	340.00	370.00	20.00	19.00	PU	PUM-252
S193406701	340.00	370.00	21.00	20.00	FKM	SUM-766
S19355L501	355.00	390.00	25.00	24.00	PU	PUM-336
S193606601	360.00	384.00	25.00	24.00	FKM	SUM-837
S19380L502	380.00	400.00	21.00	20.00	PU	PUM-377
S193801001	380.00	404.00	24.50	23.50	NBR	SUVG-697
S193806001	380.00	420.00	27.00	26.00	PU	CPU-101
S19380L501	380.00	420.00	31.00	30.00	PU	PUM-268
S19385L501	385.00	415.00	21.00	20.00	PU	PUM-181
S194006701	400.00	425.00	20.75	19.75	FKM	SUVG-562
S194206001	420.00	460.00	27.00	26.00	PU	CPU-102
S19420L501	420.00	460.00	32.00	31.00	PU	PUM-265
S19485L502	485.00	535.00	35.62	34.62	PU	PUM-267
S194856001	485.00	535.00	35.62	34.62	PU	CPU-139
S19495D601	495.00	524.00	25.00	24.00	HNBR	SUVG-594
S195406001	540.00	580.00	31.00	30.00	PU	CPU-103
S19600602	600.00	640.00	26.00	25.00	PU	CPU-132

Bold sizes are readily available in stock.
Other materials are available on request.

S20

Single Acting Rod Seal

DETAILS

S20 seal is suited for solid gland. Easy to snap into groove thus makes installation easy for this seal. The S20 seal is available in 2 versions, NBR & Polyurethane compound. Due to excellent wear resistance properties of polyurethane, the life expected is 3 times that of NBR.

COMPATIBILITY

Mineral oils, bio oils, water soluble & water glycol fluids

MATERIAL

Polyurethane 92 Shore A
Nitrile Rubber 80/85 Shore A

APPLICATION

- Light to medium duty cylinders.
- Can also be used in conjunction with S15 style rod seals for heavy duty applications.
- Mining equipment.
- Hydraulic presses.

OPERATING CONDITIONS

Temperature Range	:	-30°C to + 100°C
Pressure	:	PU - 400 Bar
		NBR - 160 Bar
Speed	:	PU - 1.0 m/s
		NBR - 0.5 m/s

FEATURES

- Simple installation.
- Good media resistance.
- Used as an individual seal or as a secondary seal possible within sealing system.

SURFACE ROUGHNESS

Static : 1.6 µmRa
Dynamic : 0.4 µmRa

INSTALLATION & ASSEMBLY

Careful fitting is a prerequisite for the correct functioning of the seal. Pl. refer to page no. 26 for guidelines.

PERMISSIBLE EXTRUSION GAP	E max (mm)
150 Bar	0.60
250 Bar	0.50
400 Bar	0.40

S20

Single Acting Rod Seal

MAX SPARE LIMITED
QUALITY. PRECISION. SPEED.

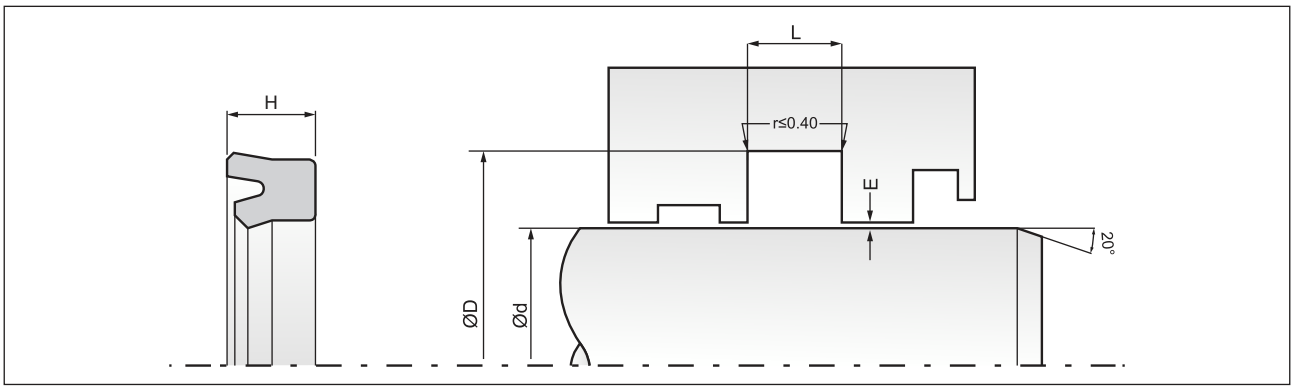

Part No.	d (f8)	D (H9)	L (+0.2)	H	Material	Mould No.
S200031103	3.00	7.00	5.80	5.30	NBR	SUA-1414
S200032401	3.00	8.50	4.80	4.30	CR	SUA-2374
S200031002	3.00	10.00	6.00	5.50	NBR	SUA-1213
S20003L501	3.00	10.00	6.50	6.00	PU	PUA-932
S20003S801	3.50	10.00	4.50	4.00	NBR	SUA-1330
S200033401	3.50	13.00	6.50	6.00	EPDM	SUA-244
S200041102	4.00	7.50	3.50	3.00	NBR	SUA-817
S200046601	4.00	8.00	3.50	3.00	FKM	SUA-860
S20004L501	4.00	8.00	4.70	4.20	PU	PUA-453
S200041104	4.00	9.00	4.00	3.50	NBR	SUA-1841
S200044301	4.00	10.00	4.50	4.00	VMQ	SUA-1092
S200043201	4.00	10.00	4.50	4.00	EPDM	SUA-1093
S200045901	4.00	10.00	4.50	4.00	PU	PUA-313
S200041106	4.00	10.00	4.50	4.00	NBR	SUA-1987
S200041105	4.00	10.00	4.70	4.20	NBR	SUA-1840
S200041001	4.00	10.00	5.10	4.60	NBR	SUA-760
S200046603	4.00	10.00	5.70	5.20	FKM	SUA-2091
S200043001	4.00	11.30	4.50	4.00	EPDM	SUA-891
S200041103	4.00	12.00	5.50	5.00	NBR	SUA-924
S200041002	4.00	12.00	6.50	6.00	NBR	SUA-1074
S200041003	4.00	16.00	12.50	11.50	NBR	SUA-2362
S200041107	4.50	10.50	3.50	3.00	NBR	SUA-2494
S200045902	4.76	11.11	3.80	3.30	PU	PUA-509
S200046602	4.80	8.00	3.50	3.00	FKM	SUA-939
S200051103	5.00	9.00	3.00	2.50	NBR	SUA-2283
S200051102	5.00	9.00	3.50	3.00	NBR	SUA-1839
S200056701	5.00	10.00	4.50	4.00	FKM	SUA-1426
S200051001	5.00	10.40	4.50	4.00	NBR	SUA-781
S200051001	5.00	10.40	4.50	4.00	NBR	SUA-790
S20005L505	5.00	12.00	5.50	5.00	PU	PUA-810
S20005L503	5.00	12.00	6.30	5.80	PU	PUA-750
S20005L501	5.00	12.20	9.30	8.30	PU	PUA-294
S20005L502	5.95	12.30	9.00	8.00	PU	PUA-629
S200061106	6.00	9.00	2.60	2.10	NBR	SUA-1037
S200061109	6.00	9.00	4.50	4.00	NBR	SUA-2125
S20006L401	6.00	10.00	3.50	3.00	PU	PUA-786
S200066701	6.00	10.00	3.50	3.00	FKM	SUA-2072
S200061001	6.00	10.00	3.50	3.00	NBR	SUA-911
S200061003	6.00	10.00	3.70	3.20	NBR	SUA-1536
S200061003	6.00	10.00	3.70	3.20	NBR	SUA-1397
S200061002	6.00	11.50	3.70	3.20	NBR	SUA-768
S200061107	6.00	11.50	3.80	3.30	NBR	SUA-1165
S20006L508	6.00	12.00	4.50	4.00	PU	PUA-724
S20006L502	6.00	12.00	6.00	5.50	PU	PUA-301
S20006L504	6.00	12.00	6.00	5.50	PU	PUA-440
S200063401	6.00	12.00	6.00	5.50	EPDM	SUA-1975
S200061004	6.00	12.00	11.00	10.00	NBR	SUA-1646
S20006L506	6.00	12.00	11.00	10.00	PU	PUA-563
S200065902	6.00	13.00	9.00	8.00	PU	PUA-156
S20006L503	6.00	14.00	11.00	10.00	PU	PUA-339
S200061006	6.35	12.70	3.70	3.20	NBR	SUA-2305
S200068701	6.35	12.70	4.40	3.90	PU	PUA-526

Part No.	d (f8)	D (H9)	L (+0.2)	H	Material	Mould No.
S20006L505	6.35	15.90	6.50	6.00	PU	PUA-473
S20007L501	7.00	12.00	4.00	3.50	PU	PUA-774
S200073502	7.00	13.00	4.50	4.00	EPDM	SUA-2425
S200076605	7.00	13.80	5.00	4.50	FKM	SUA-2437
S200076602	7.90	19.80	8.80	7.80	FKM	SUA-2076
S200076604	7.90	19.80	10.00	9.00	FKM	SUA-2220
S200076603	7.90	22.00	7.50	7.00	FKM	SUA-2077
S200071001	7.93	14.28	3.67	3.17	NBR	SUA-1866
S200073501	7.93	14.28	4.46	3.96	EPDM	SUA-1548
S200081103	8.00	11.00	2.50	2.00	NBR	SUA-1774
S20008L501	8.00	12.50	5.30	4.80	PU	PUA-511
S200081102	8.00	13.00	3.50	3.00	NBR	SUA-1838
S200081001	8.00	13.00	3.70	3.20	NBR	SUA-1470
S200080803	8.00	14.00	4.50	4.00	NBR	SUA-663
S200086602	8.00	14.00	4.50	4.00	FKM	SUA-1053
S20008L503	8.00	14.00	4.50	4.00	PU	PUA-638
S200088901	8.00	14.00	4.50	4.00	PU	PUA-923
S200086701	8.00	15.00	6.20	5.70	FKM	SUA-2033
S20008L502	8.00	15.00	6.50	6.00	PU	PUA-614
S20008L505	8.00	16.00	5.50	5.00	PU	PUA-862
S20008L504	8.00	16.00	5.50	5.00	PU	PUA-831
S200086601	8.00	16.00	6.00	5.50	FKM	SUA-1001
S200086401	8.00	16.00	6.00	5.50	FKM	SUA-953
S200081105	8.00	18.00	9.00	8.00	NBR	SUA-2228
S200086603	8.00	20.10	9.00	8.00	FKM	SUA-2349
S200094501	8.90	14.00	3.90	3.40	VMQ	SUA-1160
S200080804	8.90	17.30	4.46	3.96	NBR	SUA-1601
S20009L503	9.00	12.00	3.50	3.00	PU	PUA-588
S200091103	9.00	14.00	3.50	3.00	NBR	SUA-808
S200096601	9.00	14.00	4.00	3.50	FKM	SUA-861
S20009L504	9.00	14.00	9.70	8.70	PU	PUA-630
S20009L501	9.00	14.50	5.50	5.00	PU	PUA-288
S200094301	9.00	16.00	3.40	2.90	VMQ	SUA-2160
S20009L502	9.00	20.00	9.70	8.70	PU	PUA-336
S200090801	9.50	14.00	3.00	2.50	NBR	SUA-1091
S200091104	9.50	14.50	3.80	3.30	NBR	SUA-2144
S200090803	9.52	12.70	2.73	2.23	NBR	SUA-856
S20009L505	9.52	15.87	3.70	3.20	PU	PUA-839
S200091105	9.52	16.30	4.44	3.94	NBR	SUA-2242
S200101102	10.00	13.00	2.50	2.00	NBR	SUA-822
S200101109	10.00	13.20	2.80	2.30	NBR	SUA-1955
S200101002	10.00	13.50	2.80	2.30	NBR	SUA-1469
S200101103	10.00	13.50	2.80	2.30	NBR	SUA-1466
S200101107	10.00	13.60	2.80	2.30	NBR	SUA-1836
S200101106	10.00	14.00	2.50	2.00	NBR	SUA-1837
S200101104	10.00	14.00	2.80	2.30	NBR	SUA-1467
S200100801	10.00	14.00	2.80	2.30	NBR	SUA-1424
S200101110	10.00	14.00	3.00	2.50	NBR	SUA-2145
S200101105	10.00	14.00	4.50	4.00	NBR	SUA-1832
S200106603	10.00	14.90	2.50	2.00	FKM	SUA-1660
S200100901	10.00	15.00	4.00	3.50	NBR	SUA-1066
S200101108	10.00	16.00	3.20	2.70	NBR	SUA-1849

Bold sizes are readily available in stock.
Other materials are available on request.

S20

Single Acting Rod Seal

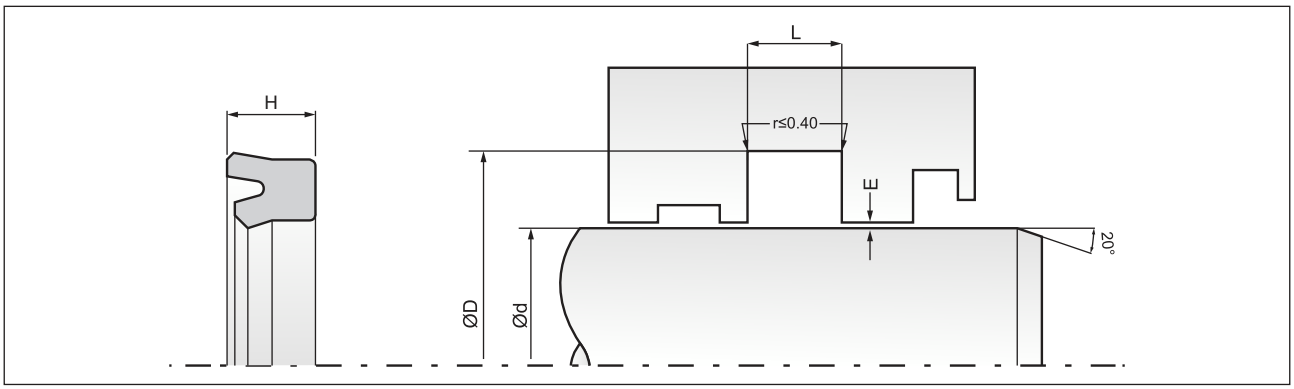

Part No.	d (f8)	D (H9)	L (+0.2)	H	Material	Mould No.
S200106605	10.00	16.00	4.00	3.50	FKM	SUA-2343
S200106601	10.00	16.00	4.50	4.00	FKM	SUA-1583
S200101111	10.00	16.00	4.70	4.20	NBR	SUA-2287
S20010L504	10.00	16.00	5.30	4.80	PU	PUA-868
S200106602	10.00	16.00	5.50	5.00	FKM	SUA-1650
S200106701	10.00	18.00	6.00	5.50	FKM	SUA-1449
S20010L501	10.00	18.00	6.20	5.70	PU	PUA-354
S200108701	10.00	18.30	6.30	5.80	PU	PUA-961
S200100701	10.00	20.00	5.50	5.00	NBR	SUA-1809
S200106703	10.00	20.00	7.00	6.50	FKM	SUA-2172
S200106604	10.00	20.00	7.50	7.00	FKM	SUA-1973
S200100802	10.00	20.00	7.50	7.00	NBR	SUA-1783
S200101006	10.00	20.00	7.50	7.00	NBR	SUA-2490
S20010L502	10.00	20.00	8.00	7.50	PU	PUA-671
S200101001	10.30	22.15	6.65	6.15	NBR	SUA-1267
S200111002	11.00	16.00	3.00	2.50	NBR	SUA-2373
S200111001	11.11	19.05	4.46	3.96	NBR	SUA-1767
S20011L501	11.50	20.00	6.20	5.70	PU	PUA-920
S20011CG01	11.96	16.81	3.50	3.00	PU	PUA-836
S200121114	12.00	16.00	3.50	3.00	NBR	SUA-1834
S20012L505	12.00	16.50	4.00	3.50	PU	PUA-424
S200121115	12.00	16.70	3.00	2.50	NBR	SUA-2115
S200120805	12.00	17.00	4.00	3.50	NBR	SUA-2442
S200121113	12.00	17.00	4.20	3.70	NBR	SUA-1835
S200121106	12.00	17.00	5.50	5.00	NBR	SUA-934
S200126701	12.00	18.00	4.75	4.25	FKM	SUA-1176
S200121109	12.00	18.00	5.00	4.50	NBR	SUA-1075
S200120804	12.00	18.50	4.50	4.00	NBR	SUA-993
S200126601	12.00	18.50	5.00	4.50	FKM	SUA-852
S200123401	12.00	18.50	5.00	4.50	EPDM	SUA-2177
S200121108	12.00	19.00	3.50	3.00	NBR	SUA-1047
S200121112	12.00	19.00	4.50	4.00	NBR	SUA-1232
S200121110	12.00	19.00	5.00	4.50	NBR	SUA-1112
S200121116	12.00	19.00	5.10	4.60	NBR	SUA-2288
S20012L508	12.00	20.00	5.50	5.00	PU	PUA-542
S190121002	12.00	20.00	5.50	5.00	NBR	SUA-2135
S20012L501	12.00	20.00	6.00	5.50	PU	PUA-278
S200126602	12.00	20.00	6.00	5.50	FKM	SUA-1004
S20012L504	12.00	20.00	6.20	5.70	PU	PUA-390
S20012L504	12.00	20.00	6.20	5.70	PU	PUA-371
S200126703	12.00	20.00	6.20	5.70	FKM	SUA-2013
S20012L506	12.00	20.00	6.30	5.80	PU	PUA-435
S200121103	12.00	20.00	6.50	6.00	NBR	SUA-417
S20012L401	12.00	20.00	6.90	6.40	PU	PUA-529
S20012L510	12.00	20.00	7.20	6.70	PU	PUA-687
S20012L507	12.00	20.00	9.00	8.00	PU	PUA-462
S200121105	12.00	25.00	6.00	5.50	NBR	SUA-853
S200126604	12.00	28.00	9.00	8.00	FKM	SUB-4069
S20012L509	12.50	20.50	5.50	5.00	PU	PUA-646
S200121111	12.50	22.50	5.50	5.00	NBR	SUA-1162
S20012D601	12.50	24.00	5.40	4.90	HNBR	SUA-1964
S20012L503	12.50	24.00	5.50	5.00	PU	PUA-350

Part No.	d (f8)	D (H9)	L (+0.2)	H	Material	Mould No.
S20012L502	12.50	27.00	5.50	5.00	PU	PUB-550
S200126603	12.70	19.05	4.28	3.78	FKM	SUA-2184
S200121004	12.70	25.40	5.26	4.76	NBR	SUB-3913
S200126501	12.96	18.42	10.00	9.00	FKM	SUA-1513
S20014O401	14.00	18.00	3.50	3.00	FKM	SUA-1847
S20014CF01	14.00	18.60	3.80	3.30	PU	PUA-814
S200141103	14.00	19.00	4.00	3.50	NBR	SUA-2084
S20014L503	14.00	20.00	3.10	2.60	PU	PUA-899
S200146701	14.00	20.00	5.30	4.80	FKM	SUA-1076
S200148701	14.00	22.00	5.00	4.50	PU	PUA-523
S200141003	14.00	22.00	5.50	5.00	NBR	SUA-1088
S20014L502	14.00	22.00	5.50	5.00	PU	PUA-608
S200141001	14.00	23.00	9.00	8.00	NBR	SUA-1443
S20014D603	14.00	24.00	5.40	4.90	HNBR	SUA-1982
S200140901	14.00	24.00	8.00	7.50	NBR	SUA-1413
S200141102	14.00	25.50	11.00	10.00	NBR	SUB-3031
S20014D601	14.00	26.00	5.40	4.90	HNBR	SUB-3282
S20014D602	14.00	30.00	5.40	4.90	HNBR	SUB-3283
S200146601	14.80	25.00	6.50	6.00	FKM	SUA-1584
S200151104	15.00	22.00	4.50	4.00	NBR	SUA-2154
S200151103	15.00	22.00	4.70	4.20	NBR	SUA-1060
S200151003	15.00	22.00	6.00	5.50	NBR	SUA-2344
S20015L504	15.00	25.00	5.50	5.00	PU	PUA-762
S200156602	15.00	25.00	6.50	6.00	FKM	SUA-1233
S200156401	15.00	30.00	9.00	8.00	FKM	SUB-4159
S200150802	15.30	23.00	5.80	5.30	NBR	SUA-1600
S20015C301	15.87	22.22	3.67	3.17	XNBR	SUA-1245
S20015C301	15.87	22.22	3.67	3.17	XNBR	SUA-961
S20015L505	15.87	22.22	3.67	3.17	PU	PUA-924
S20015L401	15.87	22.22	3.90	3.40	PU	PUA-437
S200158704	15.87	22.22	3.90	3.40	PU	PUA-364
S200151002	15.87	23.82	6.00	5.50	NBR	SUA-1653
S200150801	15.87	25.40	5.26	4.76	NBR	SUB-1551
S20015L501	15.87	25.40	6.85	6.35	PU	PUB-425
S20016L511	16.00	22.00	4.50	4.00	PU	PUA-776
S200165905	16.00	22.00	4.50	4.00	PU	PUA-874
S20016U201	16.00	22.00	4.50	4.00	FKM	SUA-2489
S200166602	16.00	22.00	5.50	5.00	FKM	SUA-799
S200163001	16.00	22.00	5.50	5.00	EPDM	SUA-1094
S200163401	16.00	22.00	5.50	5.00	EPDM	SUA-1725
S20016L504	16.00	22.00	5.50	5.00	PU	PUA-290
S200166704	16.00	22.00	7.50	7.00	FKM	SUA-2340
S200166702	16.00	22.00	11.00	10.00	FKM	SUA-1177
S200163201	16.00	22.00	6.00	5	EPDM	SUA-910
S20016R301	16.00	22.50	4.00	3.50	PU	PUA-569
S200161111	16.00	23.00	5.00	4.50	NBR	SUA-2102
S20016L512	16.00	23.00	5.00	4.50	PU	PUA-822
S200161105	16.00	23.50	5.50	5.00	NBR	SUA-864
S200161005	16.00	24.00	5.30	4.80	NBR	SUA-1769
S20016S401	16.00	24.00	5.40	4.90	HNBR	SUA-1979
S20016L505	16.00	24.00	5.50	5.00	PU	PUA-324
S200161107	16.00	24.00	5.50	5.00	NBR	SUA-1383

Bold sizes are readily available in stock.
Other materials are available on request.

S20

Single Acting Rod Seal

MAX SPARE LIMITED
QUALITY. PRECISION. SPEED.

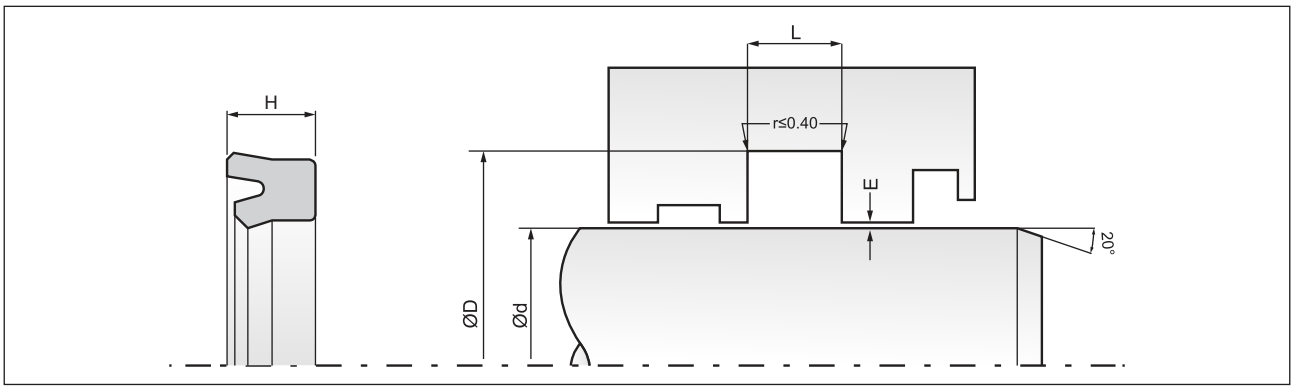

Part No.	d (f8)	D (H9)	L (+0.2)	H	Material	Mould No.
S200166601	16.00	24.00	6.00	5.50	FKM	SUA-759
S20016L507	16.00	24.00	6.00	5.50	PU	PUA-379
S20016V301	16.00	24.00	6.00	5.50	NBR	SUA-1770
S200161003	16.00	24.00	6.00	5.50	NBR	SUA-2361
S20016L502	16.00	24.00	6.10	5.60	PU	PUA-107
S20016L506	16.00	24.00	6.20	5.70	PU	PUA-372
S20016L506	16.00	24.00	6.20	5.70	PU	PUA-391
S200161112	16.00	24.00	6.30	5.80	FKM	SUA-1307
S200166403	16.00	24.00	6.50	6.00	FKM	SUA-962
S200161109	16.00	25.00	5.80	5.30	NBR	SUA-1870
S200161106	16.00	25.50	6.50	6.00	NBR	SUB-1920
S200161106	16.00	25.50	6.50	6.00	NBR	SUB-2063
S200161110	16.00	26.00	7.50	7.00	NBR	SUB-3133
S200161001	16.00	26.00	8.00	7.50	NBR	SUB-2466
S200161004	16.00	26.00	8.00	7.50	NBR	SUB-2278
S20016L508	16.00	26.00	9.00	8.00	PU	PUB-722
S200166701	16.00	26.00	9.00	8.00	FKM	SUB-1660
S200161108	16.00	27.00	7.50	7.00	NBR	SUB-2792
S20016S402	16.00	28.00	5.50	5.00	HNBR	SUB-3971
S200166603	16.00	32.00	9.00	8.00	FKM	SUB-3566
S200176401	17.00	23.00	5.10	4.60	FKM	SUA-758
S200171102	17.00	25.00	6.00	5.50	NBR	SUA-1378
S200175901	17.00	25.00	6.20	5.70	PU	PUA-510
S200176601	17.00	32.00	11.00	10.00	FKM	SUB-3567
S200176501	17.14	28.94	9.00	8.00	FKM	SUB-3577
S200176701	17.15	25.40	5.40	4.90	FKM	SUB-2977
S200171101	17.46	25.40	6.05	5.55	NBR	SUB-1925
S200170801	17.80	26.10	6.00	5.50	NBR	SUB-1631
S20018L509	18.00	22.00	3.00	2.50	PU	PUA-863
S200181108	18.00	22.00	3.50	3.00	NBR	SUA-1833
S200181106	18.00	22.00	4.50	4.00	NBR	SUA-1081
S200181110	18.00	23.00	5.50	5.00	NBR	SUA-2293
S200181101	18.00	24.00	5.40	4.90	NBR	SUA-1041
S200181112	18.00	25.00	4.50	4.00	NBR	SUA-2407
S200186701	18.00	25.00	5.00	4.50	FKM	SUA-907
S200181004	18.00	25.00	5.00	4.50	NBR	SUA-2481
S200181107	18.00	25.00	6.00	5.50	NBR	SUA-1731
S200186702	18.00	25.00	6.20	5.70	FKM	SUA-1013
S20018L506	18.00	25.50	3.40	2.90	PU	PUB-1042
S20018L504	18.00	26.00	5.00	4.50	PU	PUB-711
S20018L502	18.00	26.00	5.50	5.00	PU	PUB-613
S200181111	18.00	26.00	5.50	5.00	NBR	SUB-3842
S200188501	18.00	26.00	6.00	5.50	FKM/FABRIC	SUB-1342
S20018L508	18.00	26.00	6.20	5.70	PU	PUB-1180
S200181104	18.00	27.00	6.00	5.50	NBR	SUB-1766
S200181109	18.00	27.00	6.00	5.50	NBR	SUB-3374
S20018L505	18.00	28.00	6.50	6.00	PU	PUB-949
S20018L501	18.00	28.00	7.80	7.30	PU	PUB-513
S200186703	18.00	28.00	9.00	8.00	FKM	SUB-2322
S200186601	18.00	29.00	9.00	8.00	FKM	SUB-1371
S20018S401	18.00	30.00	5.50	5.00	HNBR	SUB-3972
S200181105	18.00	31.00	8.00	7.50	NBR	SUB-1784

Part No.	d (f8)	D (H9)	L (+0.2)	H	Material	Mould No.
S200186603	18.00	32.00	9.00	8.00	FKM	SUB-4070
S200186602	18.00	33.00	3.50	3.00	FKM	SUB-2043
S200181003	18.90	32.00	9.00	8.00	NBR	SUB-3408
S200191105	19.00	25.00	3.80	3.30	NBR	SUA-1239
S200191103	19.00	25.00	5.50	5.00	NBR	SUA-1018
S20019L505	19.00	25.00	5.75	5.25	PU	PUA-400
S200191104	19.00	25.30	7.00	6.50	NBR	SUB-1973
S20019L507	19.00	26.00	3.90	3.40	PU	PUB-1135
S20019L507	19.00	26.00	4.00	3.50	PU	PUB-1716
S20019L506	19.00	31.50	10.00	9.00	PU	PUB-964
S20019L502	19.00	35.00	9.00	8.00	PU	PUB-530
S200198701	19.05	25.40	3.67	3.17	PU	PUB-696
S200196701	19.05	25.40	3.67	3.17	FKM	SUB-2883
S20019L401	19.05	26.00	3.80	3.30	PU	PUB-909
S200198702	19.05	28.57	5.30	4.80	PU	PUB-700
S20019R302	19.45	25.79	3.90	3.40	PU	PUB-1207
S200196603	19.75	23.75	4.75	4.25	FKM	SUA-1143
S200196602	19.90	24.00	3.70	3.20	FKM	SUA-1144
S200201107	20.00	25.00	3.20	2.70	NBR	SUA-1006
S200206704	20.00	25.00	4.50	4.00	FKM	SUA-1192
S20020L506	20.00	26.00	3.90	3.40	PU	PUB-1130
S200206706	20.00	26.00	4.50	4.00	FKM	SUB-3134
S200201108	20.00	26.00	5.30	4.80	NBR	SUB-1922
S200206701	20.00	26.00	5.30	4.80	FKM	SUB-1522
S200206608	20.00	26.00	5.30	4.80	FKM	SUB-3568
S200201109	20.00	26.00	5.50	5.00	NBR	SUB-1951
S20020L502	20.00	26.00	5.50	5.00	PU	PUB-422
S200201004	20.00	26.00	5.50	5.00	NBR	SUB-2139
S20020L508	20.00	26.00	6.00	5.50	PU	PUB-1231
S200206611	20.00	26.00	6.00	5.50	FKM	SUB-3911
S200206604	20.00	26.70	4.00	3.50	FKM	SUB-1991
S20020R305	20.00	27.00	5.50	5.00	PU	PUA-567
S200206602	20.00	27.00	6.70	6.20	FKM	SUB-1699
S20020L514	20.00	27.50	3.40	2.90	NBR	PUB-1780
S200201111	20.00	27.80	6.10	5.60	NBR	SUB-2260
S20020L401	20.00	28.00	5.50	5.00	PU	PUB-862
S200206401	20.00	28.00	5.50	5.00	FKM	SUB-1829
S200201113	20.00	28.00	5.50	5.00	NBR	SUB-2791
S200201008	20.00	28.00	5.90	5.40	NBR	SUB-3265
S200206603	20.00	28.00	6.00	5.50	FKM	SUB-1842
S200208301	20.00	28.00	6.00	5.50	NBR	SUB-1079
S20020L509	20.00	28.00	6.00	5.50	PU	PUB-1287
S200201115	20.00	28.00	6.00	5.50	NBR	SUB-3040
S200206610	20.00	28.00	6.00	5.50	FKM	SUB-2163
S200203401	20.00	28.00	6.00	5.50	EPDM	SUB-3384
S200201110	20.00	28.00	6.10	5.60	NBR	SUB-2088
S20020L504	20.00	28.00	6.30	5.80	PU	PUB-1034
S20020L505	20.00	28.00	6.50	6.00	PU	PUB-1058
S200206703	20.00	28.00	6.50	6.00	FKM	SUB-1931
S20020R301	20.00	29.00	7.90	7.40	PU	PUB-1186
S200201112	20.00	30.00	7.00	6.50	NBR	SUB-2264
S200206702	20.00	30.00	8.00	7.50	FKM	SUB-1826

Bold sizes are readily available in stock.
Other materials are available on request.

S20

Single Acting Rod Seal

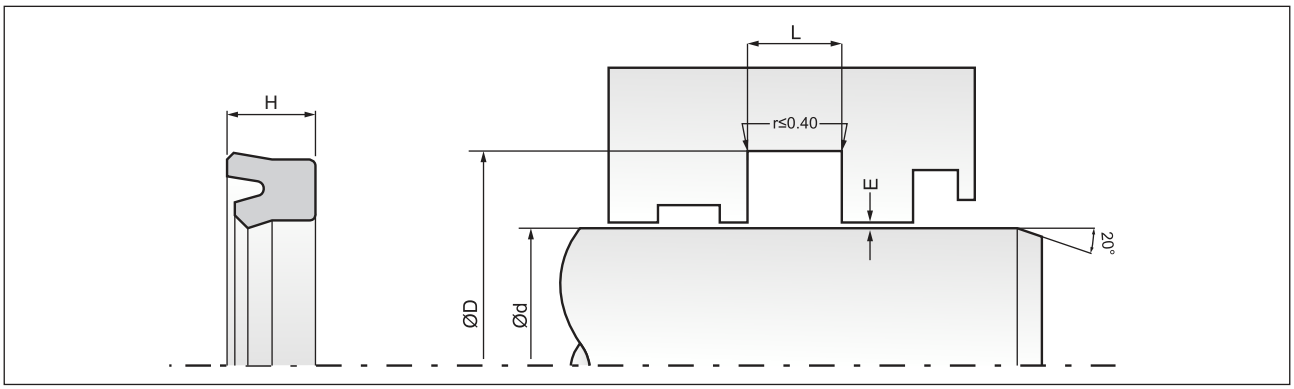

Part No.	d (f8)	D (H9)	L (+0.2)	H	Material	Mould No.
S200200801	20.00	30.00	8.00	7.50	NBR	SUB-2563
S200201005	20.00	30.00	8.00	7.50	NBR	SUC-1724
S20020L510	20.00	31.00	4.10	3.60	PU	PUB-1326
S20020L503	20.00	31.00	6.50	6.00	PU	PUB-528
S200206707	20.00	32.00	7.50	7.00	FKM	SUB-3604
S200206601	20.00	32.00	10.80	9.80	FKM	SUB-1562
S200201114	20.00	32.50	6.50	6.00	NBR	SUB-3033
S200201106	20.00	33.00	6.50	6.00	NBR	SUB-1556
S200206607	20.00	33.00	10.75	9.75	FKM	SUB-3334
S200207201	20.00	38.00	5.90	5.40	FKM/FABRIC	SUB-4170
S200206609	20.00	42.00	11.00	10.00	FKM	SUB-3789
S200201003	20.50	34.50	6.70	6.20	NBR	SUB-1810
S200201009	20.60	27.00	6.50	6.00	NBR	SUB-3692
S20020R302	20.63	26.98	5.50	5.00	PU	PUB-1206
S200208701	20.63	27.38	5.50	5.00	PU	PUB-1137
S200216602	21.00	30.00	6.50	6.00	FKM	SUB-2645
S200211001	21.30	75.00	41.00	40.00	NBR	SUC-1373
S200216601	21.40	32.00	9.00	8.00	FKM	SUB-1938
S200210801	21.58	33.32	6.28	5.78	NBR	SUB-2548
S20022L515	22.00	28.00	6.50	6.00	PU	PUB-2109
S20022L510	22.00	28.00	9.00	8.00	PU	PUB-1296
S200226610	22.00	28.00	10.00	9.00	FKM	SUB-3602
S200221104	22.00	29.00	6.00	5.50	NBR	SUB-1768
S200226604	22.00	30.00	5.50	5.00	FKM	SUB-2041
S200226603	22.00	30.00	6.00	5.50	FKM	SUB-1967
S20022L508	22.00	30.00	6.00	5.50	PU	PUB-1161
S200226605	22.00	30.00	6.00	5.50	FKM/FABRIC	SUB-2221
S200221107	22.00	30.00	6.00	5.50	NBR	SUB-3236
S200226611	22.00	30.00	6.00	5.50	FKM	SUB-3912
S200223401	22.00	30.00	6.20	5.70	EPDM	SUB-2965
S20022L502	22.00	30.00	6.50	6.00	PU	PUB-669
S200226601	22.00	30.00	7.50	7.00	FKM	SUB-1485
S20022L505	22.00	30.00	9.00	8.00	PU	PUB-938
S200222001	22.00	32.00	7.00	6.50	CR	SUB-3243
S200226602	22.00	32.00	7.50	7.00	FKM	SUB-1868
S200226608	22.00	32.00	11.00	10.00	FKM	SUB-3316
S200221103	22.00	33.00	4.50	4.00	NBR	SUB-1632
S200221102	22.00	34.00	5.50	5.00	NBR	SUB-1555
S200226609	22.00	40.00	11.00	10.00	FKM	SUB-3537
S20022L514	22.22	28.57	5.26	4.76	PU	PUB-1943
S20022L513	22.22	28.57	5.40	4.90	PU	PUB-874
S20022K301	22.22	28.57	5.40	4.90	HYT-2	PUB-876
S20022L503	22.22	28.57	5.50	5.00	PU	PUB-690
S20022L512	22.22	31.75	5.26	4.76	PU	PUB-1401
S200221003	22.22	31.75	5.26	4.76	NBR	SUB-3965
S200226607	22.40	30.00	5.50	5.00	FKM	SUB-3188
S20022L511	22.40	30.00	5.50	5.00	PU	PUB-1333
S200221105	22.40	30.00	5.70	5.20	NBR	SUB-2181
S20022L507	22.40	30.00	6.50	6.00	PU	PUB-1046
S20022L509	22.40	30.40	5.50	5.00	PU	PUB-1255
S20022L506	22.40	31.00	5.50	5.00	PU	PUB-948
S200226606	22.50	28.50	4.70	4.20	FKM	SUB-2310

Part No.	d (f8)	D (H9)	L (+0.2)	H	Material	Mould No.
S20022L501	22.50	36.00	10.00	9.00	PU	PUB-627
S200231101	23.50	31.50	5.90	5.40	NBR	SUB-1932
S200241103	24.00	32.00	6.30	5.80	NBR	SUB-3576
S200246601	24.00	32.00	6.50	6.00	FKM	SUB-2193
S20024R301	24.00	33.00	5.50	5.00	PU	PUA-568
S20024L501	24.00	33.00	6.00	5.50	PU	PUB-556
S20024L503	24.00	40.00	11.00	10.00	PU	PUB-1947
S200241101	24.80	35.80	7.50	7.00	NBR	SUB-2639
S200256608	25.00	29.10	6.00	5.50	FKM	SUB-3104
S200251004	25.00	31.00	5.00	4.50	NBR	SUB-2222
S20025L513	25.00	31.00	5.50	5.00	PU	PUB-1573
S200256612	25.00	31.00	6.00	5.50	FKM	SUB-3788
S20025L517	25.00	32.00	4.00	3.50	PU	PUB-1886
S200256602	25.00	32.00	4.50	4.00	FKM	SUB-2042
S20025L510	25.00	32.00	6.50	6.00	PU	PUB-1095
S200251106	25.00	32.50	7.50	7.00	NBR	SUB-1682
S20025703	25.00	33.00	4.50	4.00	FKM	SUB-1999
S20025L503	25.00	33.00	5.50	5.00	PU	PUB-345
S200256603	25.00	33.00	5.50	5.00	FKM	SUB-2558
S200251115	25.00	33.00	5.50	5.00	NBR	SUB-3647
S200255909	25.00	33.00	5.50	5.00	PU	PUB-1884
S200256704	25.00	33.00	6.00	5.50	FKM	SUB-1120
S200256604	25.00	33.00	6.10	5.60	FKM	SUB-2567
S200256701	25.00	33.00	6.20	5.70	FKM	SUB-1596
S20025L501	25.00	33.00	6.20	5.70	PU	PUB-426
S200251108	25.00	33.00	6.20	5.70	NBR	SUB-1755
S200256702	25.00	33.00	6.50	6.00	FKM	SUB-1875
S200254503	25.00	33.00	7.50	7.00	VMQ	SUB-2048
S200251116	25.00	33.00	7.50	7.00	NBR	SUB-3705
S200256607	25.00	33.00	8.00	7.50	FKM	SUB-2832
S200251105	25.00	33.00	9.00	8.00	NBR	SUB-1427
S20025L509	25.00	33.00	9.00	8.00	PU	PUB-1123
S20025L509	25.00	33.00	9.00	8.00	PU	PUB-1052
S200256601	25.00	33.00	11.00	10.00	FKM	SUB-1486
S200251109	25.00	33.50	6.00	5.50	NBR	SUB-1798
S200256611	25.00	34.00	5.30	4.80	FKM	SUB-3787
S200251016	25.00	34.50	6.50	6.00	NBR	SUB-3086
S200256605	25.00	35.00	5.00	4.50	FKM	SUB-2616
S200256708	25.00	35.00	5.50	5.00	FKM	SUB-3449
S200251015	25.00	35.00	6.50	6.00	NBR	SUB-2984
S200251011	25.00	35.00	7.50	7.00	NBR	SUB-1706
S200251012	25.00	35.00	7.50	7.00	NBR	SUB-2561
S20025L505	25.00	35.00	7.50	7.00	PU	PUB-596
S200250803	25.00	35.00	7.50	7.00	NBR	SUB-2564
S200256613	25.00	35.00	7.50	7.00	FKM	SUB-3872
S200250901	25.00	35.00	7.80	7.30	NBR	SUB-1612
S200251013	25.00	35.00	7.80	7.30	NBR	SUB-2583
S200251005	25.00	35.00	9.00	8.00	NBR	SUB-2439
S200256705	25.00	35.00	9.00	8.00	FKM	SUB-2855
S200256709	25.00	35.00	11.00	10.00	FKM	SUB-4165
S200250501	25.00	35.00	7.00	6	NBR	SUB-2939
S200251018	25.00	35.50	6.30	5.80	NBR	SUB-3650

Bold sizes are readily available in stock.
Other materials are available on request.

S20

Single Acting Rod Seal

MAX SPARE LIMITED
QUALITY. PRECISION. SPEED.

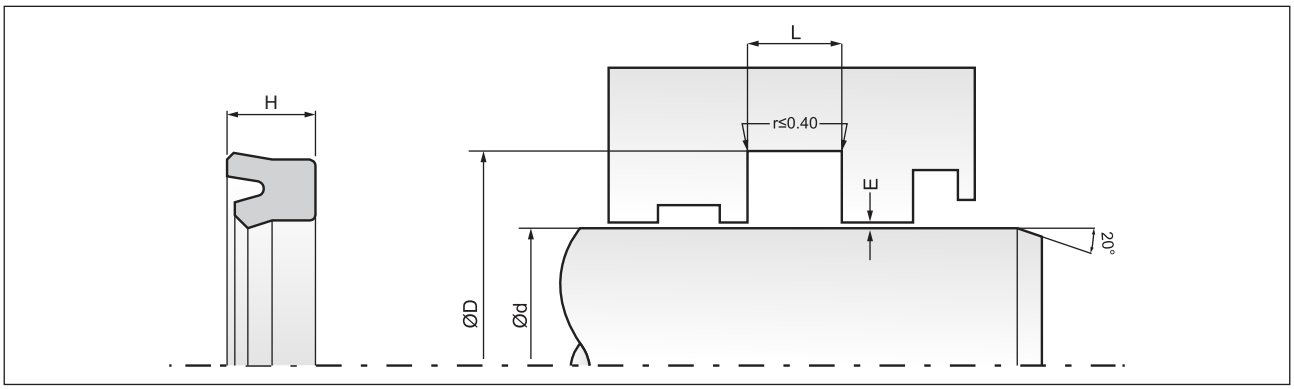

Part No.	d (f8)	D (H9)	L (+0.2)	H	Material	Mould No.
S200251019	25.00	37.00	6.50	6.00	NBR	SUB-3669
S200250902	25.00	37.00	10.00	9.00	NBR	SUB-2510
S20025L511	25.35	32.00	3.90	3.40	PU	PUB-1131
S200251111	25.40	31.40	4.00	3.50	NBR	SUB-2580
S20025L507	25.40	31.75	3.67	3.17	PU	PUB-691
S20025K301	25.40	31.75	3.90	3.40	HYT-2	PUB-877
S20025L516	25.40	31.75	3.90	3.40	PU	PUB-875
S20025L508	25.40	31.75	4.00	3.50	PU	PUB-687
S200258702	25.40	31.75	4.02	3.52	PU	PUB-699
S20025R304	25.40	32.00	4.00	3.50	PU	PUA-571
S200256606	25.40	32.25	3.74	3.24	FKM	SUB-2827
S20025R306	25.40	32.70	7.20	6.70	PU	PUB-1313
S20025L512	25.40	33.32	6.30	5.80	PU	PUB-1200
S200251112	25.40	33.32	6.85	6.35	NBR	SUB-3341
S20025C301	25.40	33.33	4.70	4.20	XNBR	SUB-2141
S20025C301	25.40	33.33	4.70	4.20	XNBR	SUB-1684
S20025L504	25.40	33.50	6.50	6.00	PU	PUB-541
S20025R305	25.40	34.92	6.85	6.35	PU	PUB-1283
S20025L515	25.40	34.92	7.10	6.60	PU	PUB-1714
S200256610	25.40	35.00	7.50	7.00	FKM	SUB-3670
S200258705	25.40	35.71	7.30	6.80	PU	PUB-1285
S200250801	25.40	38.10	6.85	6.35	NBR	SUB-1535
S200251014	25.40	38.10	6.85	6.35	NBR	SUB-2629
S200251020	25.40	50.80	13.70	12.70	NBR	SUC-2667
S200250701	25.50	35.50	6.20	5.70	NBR	SUB-3379
S200251010	25.60	38.00	6.50	6.00	NBR	SUB-2479
S20026L504	26.00	32.00	4.50	4.00	PU	PUB-1435
S20026L503	26.00	33.00	3.90	3.40	PU	PUB-1138
S200261102	26.00	36.00	6.70	6.20	NBR	SUB-3763
S20026L501	26.00	40.00	7.00	6.50	PU	PUB-586
S200261003	26.00	40.00	7.50	7.00	NBR	SUB-2212
S200261001	26.70	75.00	41.00	40.00	NBR	SUC-1374
S200276701	27.00	36.50	6.80	6.30	FKM	SUB-3303
S200271104	27.00	37.00	8.00	7.50	NBR	SUB-1972
S200276402	27.20	39.00	10.50	9.50	FKM	SUB-2022
S200286603	28.00	34.00	4.10	3.60	FKM	SUB-2216
S20028L510	28.00	34.00	9.00	8.00	PU	PUB-1319
S200281109	28.00	35.00	6.00	5.50	NBR	SUB-3518
S20028L504	28.00	35.50	5.50	5.00	PU	PUB-115
S200286602	28.00	35.50	5.50	5.00	FKM	SUB-2032
S200281110	28.00	35.50	5.60	5.10	NBR	SUB-3764
S20028L507	28.00	35.50	5.70	5.20	PU	PUB-1175
S20028L506	28.00	36.00	5.50	5.00	PU	PUB-940
S200286701	28.00	36.00	6.00	5.50	FKM	SUB-1549
S20028L509	28.00	36.00	6.00	5.50	PU	PUB-1260
S200286607	28.00	36.00	6.00	5.50	FKM	SUB-3582
S20028L512	28.00	36.00	6.20	5.70	PU	PUB-1687
S200286608	28.00	36.00	6.20	5.70	FKM	SUB-3975
S200286702	28.00	36.00	6.80	6.30	FKM	SUB-2001
S200281107	28.00	36.00	7.00	6.50	NBR	SUB-1491
S200286703	28.00	36.00	7.00	6.50	FKM	SUB-2242
S200286601	28.00	38.00	7.50	7.00	FKM	SUB-1698

Part No.	d (f8)	D (H9)	L (+0.2)	H	Material	Mould No.
S200281102	28.00	38.00	7.50	7.00	NBR	SUB-1097
S200281102	28.00	38.00	7.50	7.00	NBR	SUB-4024
S20028L511	28.00	38.00	9.00	8.00	PU	PUB-1563
S20028L401	28.55	38.10	7.00	6.50	PU	PUB-910
S20028L513	28.57	38.10	6.85	6.35	PU	PUB-1942
S20028L505	28.57	38.10	7.10	6.60	PU	PUB-692
S200291101	29.00	37.00	3.70	3.20	NBR	SUB-1926
S200290801	29.80	41.40	6.20	5.70	NBR	SUB-2499
S200306601	30.00	37.30	3.50	3.00	FKM	SUB-1487
S20030L503	30.00	38.00	6.20	5.70	PU	PUB-653
S200306706	30.00	38.00	6.20	5.70	FKM	SUB-1945
S200306606	30.00	38.00	6.70	6.20	FKM	SUB-2586
S200306701	30.00	38.00	7.50	7.00	FKM	SUB-1934
S200300701	30.00	38.00	7.50	7.00	NBR	SUB-2091
S200308701	30.00	38.00	9.20	8.20	PU	PUB-689
S20030L509	30.00	38.00	10.00	9.00	PU	PUB-1480
S200301109	30.00	38.00	11.00	10.00	NBR	SUB-3131
S200301111	30.00	40.00	5.50	5.00	NBR	SUB-3702
S20030L511	30.00	40.00	6.50	6.00	PU	PUB-1660
S200306605	30.00	40.00	6.50	6.00	FKM	SUB-664
S200301101	30.00	40.00	6.50	6.00	NBR	SUB-3704
S20030L504	30.00	40.00	7.00	6.50	PU	PUB-681
S20030L507	30.00	40.00	7.00	6.50	PU	PUB-1132
S200306604	30.00	40.00	7.50	7.00	FKM	SUB-2315
S200301120	30.00	40.00	7.50	7.00	NBR	SUB-3703
S20030L508	30.00	40.00	7.70	7.20	PU	PUB-1393
S200306703	30.00	40.00	8.00	7.50	FKM	SUB-3458
S200301004	30.00	40.00	9.00	8.00	NBR	SUB-1851
S200306704	30.00	40.00	11.00	10.00	FKM	SUB-2802
S20030L506	30.00	41.00	4.40	3.90	PU	PUB-809
S200301003	30.00	41.00	4.50	4.00	NBR	SUB-1455
S200301107	30.00	42.00	9.00	8.00	NBR	SUB-2274
S200306601	30.00	42.00	11.00	10.00	FKM	SUB-2288
S20030L510	30.00	43.00	11.00	10.00	PU	PUB-1596
S20030L402	30.00	45.00	6.50	6.00	PU	PUB-1044
S200308702	30.00	45.00	6.50	6.00	PU	PUA-524
S200306607	30.00	45.00	10.00	9.00	FKM	SUB-3258
S200303501	30.00	45.00	11.00	10.00	EPDM	SUB-3231
S200306705	30.00	45.00	11.00	10.00	FKM	SUB-3375
S200301110	30.00	45.00	11.00	10.00	NBR	SUB-3376
S20030L501	30.00	45.00	11.00	10.00	PU	PUB-431
S20030L502	30.00	47.00	7.50	7.00	PU	PUB-621
S20030O301	30.07	34.54	3.67	3.17	NBR	SUB-2102
S200301106	30.16	38.10	5.50	5.00	NBR	SUB-2134
S20030L512	30.16	39.68	8.93	7.93	PU	PUB-1940
S200301108	30.93	46.02	6.85	6.35	NBR	SUB-2464
S200316603	31.50	35.70	3.25	2.75	FKM	SUB-2112
S20031L501	31.50	41.50	6.50	6.00	PU	PUB-614
S20031L502	31.70	40.30	4.50	4.00	PU	PUB-678
S20031C301	31.75	39.68	4.70	4.20	XNBR	SUB-2213
S20031L401	31.75	41.27	7.20	6.70	PU	PUB-954
S200311101	31.75	50.80	12.80	11.80	NBR	SUC-2273

Bold sizes are readily available in stock.
Other materials are available on request.

S20

Single Acting Rod Seal

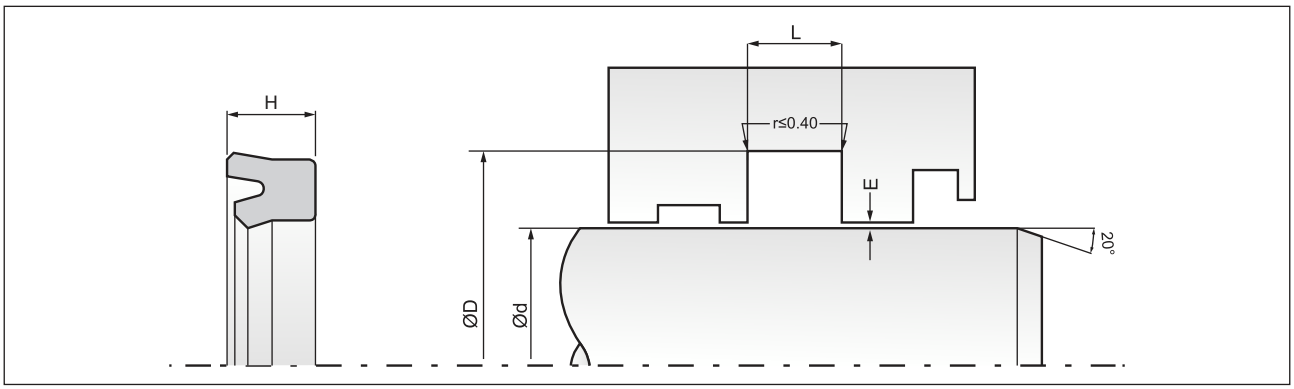

Part No.	d (f8)	D (H9)	L (+0.2)	H	Material	Mould No.
S20032L503	32.00	38.00	7.50	7.00	PU	PUB-601
S200326602	32.00	38.40	4.50	4.00	FKM	SUB-2057
S200320801	32.00	40.00	4.50	4.00	NBR	SUB-2281
S20032L502	32.00	40.00	6.20	5.70	PU	PUB-542
S20032L507	32.00	40.00	6.50	6.00	PU	PUB-1597
S200326605	32.00	40.00	6.50	6.00	FKM	SUB-4224
S200321104	32.00	40.00	7.50	7.00	NBR	SUB-1726
S20032L505	32.00	40.00	11.00	10.00	PU	PUB-646
S200321002	32.00	42.00	7.00	6.50	NBR	SUB-3181
S200321003	32.00	42.00	7.50	7.00	NBR	SUB-3643
S200321001	32.00	42.00	7.50	7.00	NBR	SUB-4051
S20032L501	32.00	42.00	7.80	7.30	PU	PUB-514
S200323401	32.00	42.00	7.80	7.30	EPDM	SUB-2739
S200328701	32.00	42.00	10.00	9.00	PU	PUB-1698
S200321105	32.00	42.00	13.00	12.00	NBR	SUB-2713
S200326603	32.00	43.00	4.00	3.50	FKM	SUB-3548
S200321103	32.00	43.00	6.50	6.00	NBR	SUB-1581
S200321107	32.00	43.00	6.50	6.00	NBR	SUB-3792
S20032L504	32.00	44.00	10.00	9.00	PU	PUB-634
S200320901	32.00	45.00	7.00	6.50	NBR	SUB-1428
S200326801	32.00	45.00	7.50	7.00	FKM	SUB-1750
S200324501	32.00	45.00	11.00	10.00	VMQ	SUB-2861
S200326604	32.00	45.00	11.00	10.00	FKM	SUB-3560
S20032V201	32.00	47.00	7.80	7.30	NBR	SUB-2518
S200331102	33.00	42.00	7.50	7.00	NBR	SUB-1656
S200331001	33.40	81.00	41.00	40.00	NBR	SUD-1006
S200341105	34.00	49.00	9.00	8.00	NBR	SUB-3700
S200341101	34.92	42.84	6.85	6.35	NBR	SUB-3340
S200348702	34.92	44.45	8.92	7.92	PU	PUB-697
S20034L401	34.92	44.45	9.20	8.20	PU	PUB-911
S20034L503	34.92	47.62	8.93	7.93	PU	PUB-1941
S20034L501	34.92	47.62	9.20	8.20	PU	PUB-693
S20034L504	34.92	49.21	3.67	3.17	PU	PUB-2115
S20035L503	35.00	40.80	6.00	5.50	PU	PUB-589
S200356704	35.00	43.00	4.50	4.00	FKM	SUB-2833
S20035L505	35.00	43.00	6.20	5.70	PU	PUB-680
S20035L510	35.00	43.00	6.30	5.80	PU	PUB-1020
S200356612	35.00	43.00	6.50	6.00	FKM	SUB-4225
S20035L506	35.00	43.00	7.50	7.00	PU	PUB-872
S200356702	35.00	43.00	7.50	7.00	FKM	SUB-2525
S200356608	35.00	43.00	9.50	8.50	FKM	SUB-3565
S200351106	35.00	43.00	11.00	10.00	NBR	SUB-2857
S200351108	35.00	43.00	11.00	10.00	NBR	SUB-3129
S200356611	35.00	43.50	7.50	7.00	FKM	SUB-4179
S200353404	35.00	43.50	11.00	10.00	EPDM	SUB-3574
S200356602	35.00	45.00	6.50	6.00	FKM	SUB-2031
S20035L512	35.00	45.00	6.50	6.00	PU	PUB-1227
S20035L513	35.00	45.00	6.50	6.00	PU	PUB-1617
S200351109	35.00	45.00	6.50	6.00	NBR	SUB-2290
S20035L515	35.00	45.00	7.00	6.50	PU	PUB-1743
S200356609	35.00	45.00	7.20	6.70	FKM	SUB-4073
S200351101	35.00	45.00	7.50	7.00	NBR	SUB-324

Part No.	d (f8)	D (H9)	L (+0.2)	H	Material	Mould No.
S20035L508	35.00	45.00	7.50	7.00	PU	PUB-1015
S20035D601	35.00	45.00	7.50	7.00	HNBR	SUB-2892
S200353401	35.00	45.00	7.50	7.00	EPDM	SUB-2966
S200350901	35.00	45.00	7.70	7.20	NBR	SUB-1614
S20035L504	35.00	45.00	7.80	7.30	PU	PUB-592
S200351104	35.00	45.00	8.00	7.50	NBR	SUB-2275
S200356701	35.00	45.00	9.00	8.00	FKM	SUB-1688
S20035L509	35.00	45.00	11.00	10.00	PU	PUB-1016
S200351102	35.00	45.00	11.00	10.00	NBR	SUB-1489
S200356705	35.00	45.00	11.00	10.00	FKM	SUB-3856
S200356606	35.00	46.00	8.00	7	FKM	SUB-2954
S200351003	35.00	47.20	7.60	7.10	NBR	SUB-3937
S200356605	35.00	48.00	6.50	6.00	FKM	SUB-2808
S200351107	35.00	50.00	7.50	7.00	NBR	SUB-3127
S20035L401	35.00	50.00	12.00	11.00	PU	PUB-1210
S20035L501	35.00	50.00	12.00	11.00	PU	PUB-484
S200356604	35.00	51.00	9.00	8.00	FKM	SUC-1822
S20035L507	35.50	45.00	6.50	6.00	PU	PUB-951
S200351001	35.50	45.00	7.00	6.50	NBR	SUB-2337
S20035L511	35.50	45.00	7.00	6.50	PU	PUB-1174
S200356603	35.50	45.00	7.00	6.50	FKM	SUB-2044
S20035X401	35.50	45.50	7.00	6.50	PU	PUB-1259
S20036L504	36.00	42.00	5.50	5.00	PU	PUB-629
S20036L502	36.00	44.00	5.80	5.30	PU	PUB-511
S20036L501	36.00	44.00	6.20	5.70	PU	PUB-510
S200366604	36.00	44.00	6.20	5.70	FKM	SUB-2146
S200361104	36.00	44.00	6.20	5.70	NBR	SUB-1764
S200366701	36.00	44.00	6.20	5.70	FKM	SUB-1640
S20036L508	36.00	44.00	6.20	5.70	PU	PUB-1688
S200361102	36.00	44.00	6.50	6.00	NBR	SUB-1476
S20036L506	36.00	44.00	9.20	8.20	PU	PUB-1147
S200360801	36.00	45.00	5.50	5.00	NBR	SUB-1947
S200366606	36.00	46.00	6.50	6.00	FKM	SUB-2942
S200361105	36.00	46.00	6.80	6.30	NBR	SUB-2957
S200361002	36.00	46.00	7.50	7.00	NBR	SUB-3180
S200361106	36.00	46.00	7.70	7.20	NBR	SUB-3292
S20036L503	36.00	46.00	7.80	7.30	PU	PUB-546
S200366605	36.00	46.00	7.80	7.30	FKM	SUB-2858
S20036L507	36.00	46.00	9.00	8.00	PU	PUB-1337
S200366603	36.00	46.00	9.00	8.00	FKM	SUB-2113
S200361103	36.00	46.00	9.00	8.00	NBR	SUB-1490
S200361108	36.00	47.00	4.50	4.00	NBR	SUB-3662
S20036L505	36.00	48.00	7.50	7.00	PU	PUB-868
S200366702	36.00	48.00	9.50	8.50	FKM	SUB-3424
S20036L509	36.00	51.00	12.00	11.00	PU	PUC-1253
S20037L501	37.00	45.00	6.20	5.70	PU	PUB-593
S20037L502	37.00	47.00	7.80	7.30	PU	PUB-952
S20037L503	37.00	47.00	9.00	8.00	PU	PUB-1040
S20038L503	38.00	48.00	7.00	6.50	PU	PUB-1134
S200381102	38.00	48.00	7.50	7.00	NBR	SUB-1957
S20038L505	38.00	48.00	9.00	8.00	PU	PUB-1444
S200381105	38.00	48.00	12.00	11.00	NBR	SUB-3695

Bold sizes are readily available in stock.
Other materials are available on request.

S20

Single Acting Rod Seal

MAX SPARE LIMITED
QUALITY. PRECISION. SPEED.

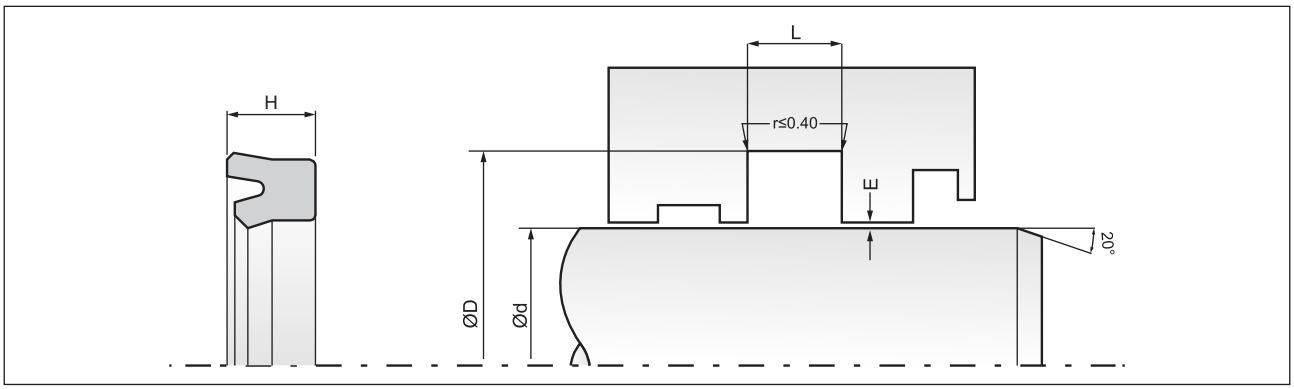

Part No.	d (f8)	D (H9)	L (+0.2)	H	Material	Mould No.
S200381103	38.00	49.00	8.60	7.60	NBR	SUB-2476
S200386401	38.00	50.00	7.50	7.00	FKM	SUB-1355
S20038L504	38.00	50.00	8.00	7.50	PU	PUB-1156
S200381104	38.00	50.00	8.00	7.50	NBR	SUB-3589
S200381001	38.00	50.00	10.60	9.60	NBR	SUB-2707
S20038L508	38.00	50.00	10.70	9.70	PU	PUB-1934
S200388702	38.10	47.60	9.00	8.00	PU	PUB-1649
S20038L401	38.10	47.62	7.00	6.50	PU	PUB-955
S200388701	38.10	47.62	8.93	7.93	PU	PUB-694
S20038L502	38.10	48.20	11.30	10.30	PU	PUB-712
S200398901	39.00	47.60	9.30	8.30	PU	PUB-1202
S200408703	40.00	48.00	6.20	5.70	PU	PUB-1305
S20040L506	40.00	48.00	6.50	6.00	PU	PUB-953
S200406702	40.00	48.00	6.90	6.40	FKM	SUB-1642
S20040L509	40.00	48.00	7.20	6.70	PU	PUB-1483
S200408901	40.00	48.00	9.00	8.00	PU	PUB-1246
S20040L517	40.00	48.00	9.30	8.30	PU	PUB-1796
S200406603	40.00	48.00	10.00	9.00	FKM	SUB-1891
S200401011	40.00	48.00	10.50	9.50	NBR	SUB-3710
S200404501	40.00	48.00	10.70	9.70	VMQ	SUB-2291
S200401104	40.00	48.00	11.00	10.00	NBR	SUB-1936
S20040L512	40.00	50.00	4.50	4.00	PU	PUB-1634
S200401008	40.00	50.00	6.00	5.50	NBR	SUB-3632
S200401005	40.00	50.00	6.50	6.00	NBR	SUB-3288
S200406601	40.00	50.00	6.50	6.00	FKM	SUB-1806
S20040L502	40.00	50.00	6.50	6.00	PU	PUB-568
S200401003	40.00	50.00	7.00	6.50	NBR	SUB-2049
S200406501	40.00	50.00	7.50	7.00	FKM	SUB-1277
S200401007	40.00	50.00	7.50	7.00	NBR	SUB-3393
S200401106	40.00	50.00	7.50	7.00	NBR	SUB-3701
S200408701	40.00	50.00	7.80	7.30	PU	PUB-409
S200401103	40.00	50.00	7.80	7.30	NBR	SUB-1765
S200401105	40.00	50.00	8.00	7.50	NBR	SUB-2565
S200406607	40.00	50.00	9.00	8.00	FKM	SUB-2611
S200406703	40.00	50.00	9.00	8.00	FKM	SUB-2429
S20040L507	40.00	50.00	11.00	10.00	PU	PUB-1085
S200406612	40.00	50.00	11.00	10.00	FKM	SUB-3596
S200400802	40.00	50.00	11.00	10.00	NBR	SUB-3368
S200401010	40.00	51.00	6.80	6.30	NBR	SUC-2427
S200401107	40.00	52.00	7.00	6.50	NBR	SUC-2374
S200401115	40.00	52.00	11.00	10	NBR	SUC-2638
S200401001	40.00	54.00	8.00	7.50	NBR	SUC-1262
S20040L511	40.00	55.00	10.00	9.00	PU	PUC-1086
S200401004	40.00	55.00	10.50	9.50	NBR	SUC-1672
S200401111	40.00	55.00	11.00	10.00	NBR	SUC-2474
S200406611	40.00	55.00	13.00	12.00	FKM	SUC-2259
S200406602	40.00	56.50	8.70	7.70	FKM	SUC-1205
S20040L508	40.00	72.00	16.00	15.00	PU	PUC-842
S20040L503	40.00	72.00	16.00	15.00	PU	PUC-471
S20041L502	41.27	50.80	6.85	6.35	PU	PUC-1365
S20041L501	41.27	57.15	10.52	9.52	PU	PUC-1363
S200418701	41.27	57.15	12.10	11.10	PU	PUC-599

Part No.	d (f8)	D (H9)	L (+0.2)	H	Material	Mould No.
S200416801	41.50	50.00	5.26	4.76	FKM	SUB-1832
S200421101	42.00	50.00	6.20	5.70	NBR	SUB-1738
S20042L501	42.00	50.00	6.20	5.70	PU	PUB-532
S20042L503	42.00	50.00	9.50	8.50	PU	PUB-597
S200421105	42.00	50.00	11.00	10.00	NBR	SUB-3706
S200423201	42.00	52.00	9.00	8.00	EPDM	SUC-1139
S20042L502	42.00	54.00	6.50	6.00	PU	PUC-462
S20042	42.00	58.00	9.16	8.16	NBR	SUC-2815
S20042L504	42.00	62.00	11.00	10.00	PU	PUC-523
S200421001	42.20	104.00	41.00	40.00	NBR	SUE-553
S200436701	43.00	48.00	4.50	4.00	FKM	SUB-2797
S20043L502	43.00	53.00	8.00	7.50	PU	PUC-495
S20043L501	43.50	53.00	11.00	10.00	PU	PUC-477
S200446605	44.00	60.00	8.92	7.92	FKM	SUC-2685
S20044C301	44.45	53.97	5.26	4.76	XNBR	SUC-1288
S20044L501	44.45	53.97	7.00	6.50	PU	PUC-1221
S200441001	44.45	54.50	5.70	5.20	NBR	SUC-1543
S020446605	44.45	57.15	7.70	7.20	FKM	SUC-2437
S200441105	44.45	57.15	10.52	9.52	NBR	SUC-969
S200446604	44.45	57.15	10.80	9.80	FKM	SUC-2037
S200446602	44.45	60.32	9.00	8.00	FKM	SUC-1777
S200446603	44.45	60.32	11.16	10.16	FKM	SUC-1807
S200456709	45.00	53.00	6.10	5.60	FKM	SUC-2797
S20045L502	45.00	53.00	6.20	5.70	PU	PUC-414
S200456614	45.00	53.00	6.50	6.00	FKM	SUC-1940
S20045L510	45.00	53.00	9.20	8.20	PU	PUC-874
S200451107	45.00	53.00	10.00	9.00	NBR	SUC-1680
S200451106	45.00	53.00	11.00	10.00	NBR	SUC-1569
S200451104	45.00	54.00	7.50	7.00	NBR	SUC-1232
S20045L506	45.00	55.00	6.50	6.00	PU	PUC-519
S200456608	45.00	55.00	6.50	6.00	FKM	SUC-1538
S20045L507	45.00	55.00	7.00	6.50	PU	PUC-588
S200456401	45.00	55.00	7.30	6.80	FKM	SUC-1228
S200456703	45.00	55.00	7.50	7.00	FKM	SUC-1203
S200450901	45.00	55.00	7.60	7.10	NBR	SUC-1573
S200456702	45.00	55.00	7.70	7.20	FKM	SUC-1202
S200453401	45.00	55.00	7.80	7.30	EPDM	SUC-2050
S20045L504	45.00	55.00	7.80	7.30	PU	PUC-472
S200456618	45.00	55.00	7.80	7.30	FKM	SUC-2491
S200456602	45.00	55.00	8.00	7.50	FKM	SUC-1166
S200454501	45.00	55.00	8.00	7.50	VMQ	SUC-1999
S20045L513	45.00	55.00	9.00	8.00	PU	PUC-1079
S20045L512	45.00	55.00	9.00	8.00	PU	PUC-1294
S200456609	45.00	55.00	9.00	8.00	FKM	SUC-1583
S200456603	45.00	55.00	11.00	10.00	FKM	SUC-1173
S200456615	45.00	55.00	11.00	10.00	FKM	SUC-2039
S20045L508	45.00	55.00	11.00	10.00	PU	PUC-716
S200456619	45.00	56.00	6.50	6.00	FKM	SUC-2744
S200456612	45.00	56.00	7.50	7.00	FKM	SUC-1749
S20045L522	45.00	56.00	7.50	7.00	PU	PUC-1250
S200451112	45.00	56.00	7.70	7.20	NBR	SUC-2503
S20045L511	45.00	56.00	7.80	7.30	PU	PUC-908

Bold sizes are readily available in stock.
Other materials are available on request.

S20

Single Acting Rod Seal

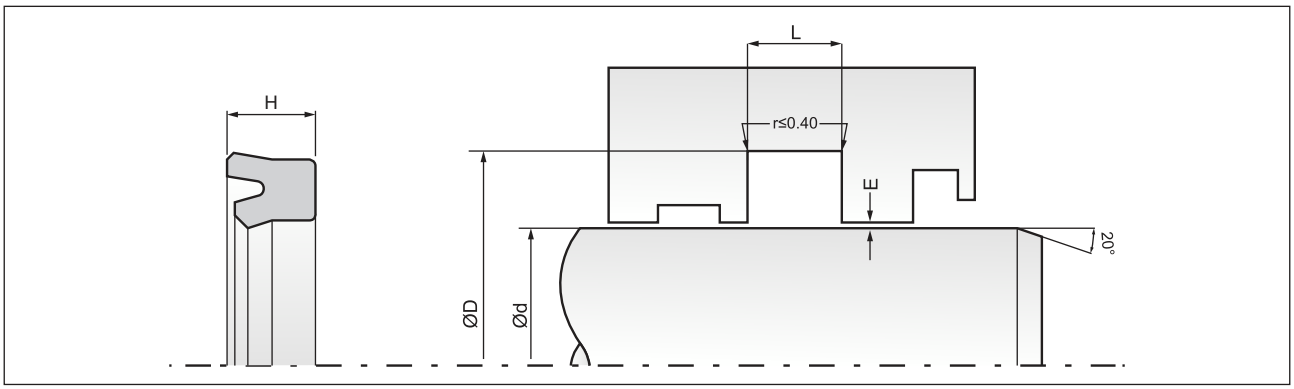

Part No.	d (f8)	D (H9)	L (+0.2)	H	Material	Mould No.
S20045L509	45.00	56.00	8.00	7.50	PU	PUC-807
S200451113	45.00	57.00	11.50	10.50	NBR	SUC-2663
S200451110	45.00	60.00	7.60	7.10	NBR	SUC-2217
S200451105	45.00	60.00	9.50	8.50	NBR	SUC-1386
S20045L515	45.00	60.00	10.00	9.00	PU	PUC-1083
S20045L503	45.00	60.00	11.00	10.00	PU	PUC-290
S200456616	45.00	60.00	11.00	10.00	FKM	SUC-2223
S200451109	45.00	60.00	11.00	10.00	NBR	SUC-2168
S20045L514	45.00	61.00	13.00	12.00	PU	PUC-1078
S20045L505	45.00	61.00	13.00	12.00	PU	PUC-504
S200456611	45.00	63.00	11.00	10.00	FKM	SUC-1683
S200451108	45.00	63.00	12.50	11.50	NBR	SUC-2169
S200456610	45.00	65.00	10.60	9.60	FKM	SUC-1645
S20045L516	45.00	65.00	13.00	12.00	PU	PUC-1092
S200456701	45.00	65.00	13.00	12.00	FKM	SUC-1109
S200451002	45.00	70.00	17.50	16.50	NBR	SUC-1178
S200456704	45.24	50.24	4.50	4.00	FKM	SUC-1929
S200461101	46.00	56.00	6.20	5.70	NBR	SUC-1482
S20046L501	46.00	56.00	7.70	7.20	PU	PUC-452
S200471101	47.00	57.00	10.00	9.00	NBR	SUC-1416
S20047R301	47.62	57.15	9.00	8.00	PU	PUC-828
S200478701	47.62	57.15	10.52	9.52	PU	PUC-600
S20047L501	47.62	57.15	10.52	9.52	PU	PUC-1362
S200471102	47.62	63.50	10.52	9.52	NBR	SUC-2516
S200478702	47.62	63.50	12.10	11.10	PU	PUC-601
S20047L502	47.62	63.50	12.11	11.11	PU	PUC-1379
S20048L505	48.00	55.00	6.80	6.30	PU	PUC-1274
S20048L503	48.00	56.00	13.00	12.00	PU	PUC-1101
S200481101	48.00	58.00	7.50	7.00	NBR	SUC-2471
S20048L506	48.00	58.00	7.80	7.30	PU	PUC-1290
S20048L501	48.00	58.00	9.00	8.00	PU	PUC-788
S200486601	48.00	58.00	10.00	9.00	FKM	SUC-2193
S20048L502	48.00	60.00	7.50	7.00	PU	PUC-941
S200481001	48.30	104.00	41.00	40.00	NBR	SUE-700
S200496601	49.00	60.00	10.00	9.00	FKM	SUC-2611
S20050L512	50.00	56.00	6.50	6.00	PU	PUC-706
S200508703	50.00	58.00	9.00	8.00	PU	PUC-510
S200506502	50.00	58.00	10.10	9.10	FKM	SUC-1685
S20050L503	50.00	58.00	11.00	10.00	PU	PUC-437
S200506605	50.00	58.00	11.20	10.20	FKM	SUC-1526
S200501004	50.00	59.00	6.50	6.00	NBR	SUC-1696
S20050L505	50.00	60.00	6.50	6.00	PU	PUC-547
S200501106	50.00	60.00	6.50	6.00	NBR	SUC-2377
S200506609	50.00	60.00	6.50	6.00	FKM	SUC-1983
S20050L517	50.00	60.00	6.50	6.00	PU	PUC-1255
S200501008	50.00	60.00	6.50	6.00	NBR	SUC-2537
S20050L524	50.00	60.00	6.80	6.30	PU	PUC-1317
S200506602	50.00	60.00	7.10	6.60	FKM	SUC-1253
S200506501	50.00	60.00	7.50	7.00	FKM	SUC-1502
S200501107	50.00	60.00	7.50	7.00	NBR	SUC-2558
S20050L506	50.00	60.00	7.80	7.30	PU	PUC-552
S200506601	50.00	60.00	7.80	7.30	FKM	SUC-1052

Part No.	d (f8)	D (H9)	L (+0.2)	H	Material	Mould No.
S200506701	50.00	60.00	8.00	7.50	FKM	SUC-1204
S200501001	50.00	60.00	8.70	7.70	NBR	SUC-1062
S20050L515	50.00	60.00	9.00	8.00	PU	PUC-508
S200508707	50.00	60.00	9.00	8.00	PU	PUC-1194
S200506608	50.00	60.00	9.30	8.30	FKM	SUC-1923
S20050L510	50.00	60.00	11.00	10.00	PU	PUC-574
S200501006	50.00	60.00	11.00	10.00	NBR	SUC-2343
S20050L514	50.00	60.00	13.00	12.00	PU	PUC-834
S200501009	50.00	60.40	7.20	6.70	NBR	SUC-2640
S20050L513	50.00	62.00	9.00	8.00	PU	PUC-811
S200506702	50.00	62.00	11.00	10.00	FKM	SUC-1229
S20050L516	50.00	62.50	7.80	7.30	PU	PUC-911
S200501104	50.00	63.00	11.00	10.00	NBR	SUC-2081
S20050L518	50.00	63.00	11.00	10.00	PU	PUC-1085
S200501105	50.00	63.00	11.40	10.40	NBR	SUC-2190
S20050L525	50.00	63.00	13.00	12.00	PU	PUC-1364
S200506611	50.00	65.00	10.00	9.00	FKM	SUC-2349
S20050L504	50.00	65.00	11.00	10.00	PU	PUC-539
S200506604	50.00	65.00	11.00	10.00	FKM	SUC-1518
S200500901	50.00	65.00	11.00	10.00	NBR	SUC-1574
S200506603	50.00	65.00	12.00	11.00	FKM	SUC-1428
S200508705	50.00	65.00	12.40	11.40	PU	PUC-923
S20055L502	50.00	65.00	12.80	11.80	PU	PUC-461
S20050L520	50.00	70.00	12.40	11.40	PU	PUC-1119
S20050L519	50.00	70.00	13.00	12.00	PU	PUC-1091
S20050L502	50.00	70.00	13.00	12.00	PU	PUC-378
S200506706	50.00	70.00	13.00	12.00	FKM	SUC-2779
S20050L523	50.00	70.00	14.00	13.00	PU	PUC-1251
S200500301	50.80	60.32	5.26	4.76	XNBR	SUC-1307
S200506703	50.80	60.32	6.85	6.35	FKM	SUC-1259
S200501103	50.80	60.50	5.90	5.40	NBR	SUC-1131
S200506610	50.80	60.80	10.00	9.00	FKM	SUC-2182
S200506613	50.80	63.50	8.62	7.62	FKM	SUC-2661
S20050L507	50.80	63.50	8.93	7.93	PU	PUC-557
S20050L508	50.80	66.67	10.52	9.52	PU	PUC-558
S200501002	50.80	66.70	13.70	12.70	NBR	SUC-1190
S200511102	51.10	72.30	10.00	9.00	NBR	SUC-1420
S20052L501	52.50	60.50	5.50	5.00	PU	PUC-528
S200536602	53.00	63.00	6.50	6.00	FKM	SUC-2786
S20053L501	53.00	63.00	7.50	7.00	PU	PUC-1094
S200536601	53.00	63.00	7.50	7.00	FKM	SUC-1758
S200531101	53.00	80.00	14.50	13.50	NBR	SUD-2142
S200546601	54.00	63.00	7.50	7.00	FKM	SUC-2191
S200551103	55.00	63.00	6.50	6.00	NBR	SUC-2546
S20055L505	55.00	63.00	7.80	7.30	PU	PUC-1020
S200551102	55.00	63.00	11.00	10.00	NBR	SUC-2115
S20055L503	55.00	63.00	11.00	10.00	PU	PUC-464
S200556601	55.00	63.00	11.00	10.00	FKM	SUC-2582
S20055L504	55.00	65.00	12.80	11.80	PU	PUC-484
S20055BF01	55.00	66.00	4.00	3.50	VMQ	SUC-2608
S200550901	55.00	67.00	10.00	9.00	NBR	SUC-2254
S20055L507	55.00	68.00	11.00	10.00	PU	PUC-1084

Bold sizes are readily available in stock.
Other materials are available on request.

S20

Single Acting Rod Seal

MAX SPARE LIMITED
QUALITY. PRECISION. SPEED.

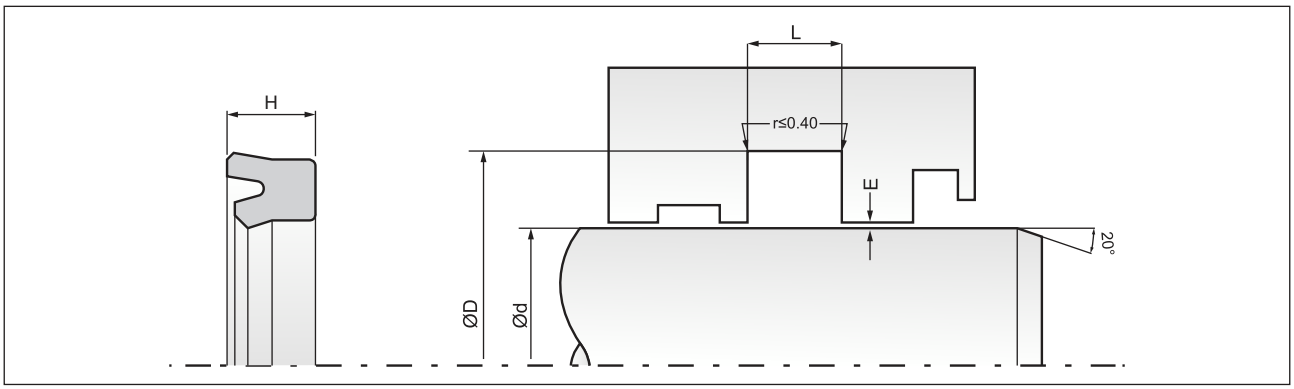

Part No.	d (f8)	D (H9)	L (+0.2)	H	Material	Mould No.
S20055L506	55.00	70.00	11.00	10.00	PU	PUC-1081
S20055L510	55.00	70.00	11.00	10.00	PU	PUC-1368
S200550601	55.00	70.00	13.00	12.00	NBR/FABRIC	SUC-2707
S20055L508	55.00	75.00	13.00	12.00	PU	PUC-1090
S200566703	56.00	65.00	9.50	8.50	FKM	SUC-1197
S200566604	56.00	66.00	6.00	5.50	FKM	SUC-1258
S200566602	56.00	66.00	6.50	6.00	FKM	SUC-1231
S20056L502	56.00	66.00	7.00	6.50	PU	PUC-808
S200566603	56.00	66.00	7.10	6.60	FKM	SUC-1254
S200566601	56.00	66.00	7.50	7.00	FKM	SUC-1030
S200566701	56.00	66.00	10.00	9.00	FKM	SUC-1152
S200566702	56.00	66.00	11.00	10.00	FKM	SUC-1151
S200560902	56.00	68.00	8.00	7.50	NBR	SUC-2400
S200566704	56.00	68.00	11.00	10.00	FKM	SUC-1457
S200566609	56.00	70.00	9.00	8.00	FKM	SUC-1689
S200560901	56.00	70.00	11.00	10.00	NBR	SUC-1691
S200560701	56.00	70.00	13.50	12.50	NBR/FABRIC	SUC-2104
S20056L504	56.00	71.00	6.80	6.30	PU	PUC-947
S200566610	56.00	71.00	10.50	9.50	FKM	SUC-1976
S20056L501	56.00	71.00	12.40	11.40	PU	PUC-603
S200566705	56.00	71.00	12.50	11.50	FKM	SUC-1954
S200564501	56.00	71.00	12.50	11.50	VMQ	SUC-1998
S20056L503	56.00	73.00	12.50	11.50	PU	PUC-896
S20056L402	56.00	76.00	14.00	13.00	PU	PUD-581
S200568701	56.00	76.00	14.00	13.00	PU	PUD-828
S20057L502	57.00	65.00	5.50	5.00	PU	PUC-723
S200576701	57.00	67.00	7.50	7.00	FKM	SUC-2304
S20057L501	57.00	70.00	13.00	12.00	PU	PUC-455
S200570901	57.15	69.85	10.53	9.53	NBR	SUC-1690
S20057L503	57.15	69.85	11.00	10.00	PU	PUC-830
S20058L502	58.00	66.00	5.50	5.00	PU	PUC-554
S20058L501	58.00	68.00	6.50	6.00	PU	PUC-529
S200586701	58.00	74.00	9.00	8.00	FKM	SUC-1084
S200581003	58.00	78.00	14.00	13.00	NBR/FABRIC	SUD-1921
S200586702	58.30	73.50	9.00	8.00	FKM	SUC-2780
S200581002	58.32	78.50	13.50	12.50	NBR	SUD-1369
S20006L509	60.00	12.00	4.00	3.50	PU	PUA-773
S20060L502	60.00	66.00	6.50	6.00	PU	PUC-468
S200601108	60.00	68.00	9.00	8.00	NBR	SUC-1194
S200601109	60.00	68.00	13.50	12.50	NBR	SUC-2274
S20060U401	60.00	69.00	9.50	8.50	EPDM	SUC-2520
S20060L504	60.00	70.00	6.50	6.00	NBR	PUC-108
S200606609	60.00	70.00	6.50	6.00	FKM	SUC-2527
S200601110	60.00	70.00	6.70	6.20	NBR	SUC-2376
S200601001	60.00	70.00	6.90	6.40	NBR	SUC-1331
S200606601	60.00	70.00	7.00	6.50	FKM	SUC-1317
S20060L512	60.00	70.00	7.80	7.30	PU	PUC-565
S20060L509	60.00	70.00	9.00	8.00	PU	PUC-921
S200601111	60.00	70.00	9.50	8.50	NBR	SUC-2708
S200606606	60.00	70.00	11.00	10.00	FKM	SUC-2005
S20060L520	60.00	70.00	11.40	10.40	PU	PUC-1384
S200606604	60.00	70.00	12.00	11.00	FKM	SUC-1889

Part No.	d (f8)	D (H9)	L (+0.2)	H	Material	Mould No.
S200606603	60.00	70.00	12.50	11.50	FKM	SUC-1640
S20060L505	60.00	71.00	7.50	7.00	PU	PUC-546
S20060S801	60.00	72.00	9.50	8.50	NBR	SUC-2300
S20060L511	60.00	73.00	11.00	10.00	PU	PUC-1080
S20060L508	60.00	75.00	11.40	10.40	PU	PUC-865
S200606605	60.00	75.00	12.80	11.80	FKM	SUC-2006
S20060L501	60.00	75.00	13.00	12.00	PU	PUC-1205
S200606608	60.00	80.00	10.00	9.00	FKM	SUD-1692
S200603401	60.00	80.00	11.00	10.00	EPDM	SUD-1568
S20060L513	60.00	80.00	13.00	12.00	PU	PUD-908
S200608301	60.00	80.00	13.00	12.00	NBR/FABRIC	SUD-2016
S200606602	60.00	80.00	15.00	14.00	FKM	SUD-805
S20060L503	60.00	80.00	16.00	15.00	PU	PUD-599
S200601002	60.30	105.00	41.00	40.00	NBR	SUE-701
S20062T501	62.00	74.00	13.00	12.00	EPDM	SUC-1653
S20062L501	62.00	75.00	9.00	8.00	PU	PUC-463
S200636606	63.00	73.00	7.50	7.00	FKM	SUC-2175
S200636701	63.00	73.00	11.00	10.00	FKM	SUC-2113
S20063L501	63.00	73.00	12.50	11.50	PU	PUC-453
S200631002	63.00	75.00	9.50	8.50	NBR	SUC-2276
S200636602	63.00	75.00	11.00	10.00	FKM	SUC-1458
S200633401	63.00	75.00	11.00	10.00	EPDM	SUC-2731
S200636607	63.00	78.00	11.00	10.00	FKM	SUD-1689
S200636610	63.00	78.00	12.50	11.50	FKM	SUD-2074
S200631001	63.50	75.00	5.50	5.00	NBR	SUC-1542
S20063L502	63.50	75.00	7.64	7.14	PU	PUC-473
S200638701	63.50	76.20	8.93	7.93	PU	PUD-519
S200636702	63.50	76.20	10.50	9.50	FKM	SUD-1712
S20063L507	63.50	76.20	10.52	9.52	PU	PUD-1082
S20063L504	63.50	76.20	10.60	9.60	PU	PUD-575
S20063L503	63.50	76.20	10.80	9.80	PU	PUD-506
S200636609	63.50	89.00	20.00	19.00	FKM	SUD-1854
S200636604	63.50	89.50	17.50	16.50	FKM	SUD-1529
S200640601	64.00	82.00	14.00	13.00	NBR/FABRIC	SUD-1841
S20065L503	65.00	75.00	6.50	6.00	PU	PUC-544
S20065L505	65.00	75.00	12.80	11.80	PU	PUC-769
S20065L504	65.00	75.00	13.00	12.00	PU	PUC-717
S20065L501	65.00	77.00	10.00	9.00	PU	PUD-290
S20065L506	65.00	78.00	11.00	10.00	PU	PUD-895
S200651001	65.00	78.00	11.00	10.00	NBR	SUD-1608
S20065L507	65.00	80.00	12.40	11.40	PU	PUD-1035
S20065L502	65.00	80.00	13.20	12.20	PU	PUD-408
S200668701	66.00	81.00	14.00	13.00	PU	PUD-844
S20066L501	66.67	85.72	13.70	12.70	PU	PUD-1083
S20068L501	68.00	74.00	5.50	5.00	PU	PUC-456
S200683401	68.00	78.00	5.50	5.00	EPDM	SUD-1573
S200681101	68.00	80.00	9.00	8.00	NBR	SUD-1954
S200693501	69.80	80.00	5.70	5.20	EPDM	SUD-1305
S20069L502	69.85	82.55	10.52	9.52	PU	PUD-837
S20069L501	69.85	82.55	10.80	9.80	PU	PUD-573
S200691101	69.85	91.00	10.40	9.40	NBR	SUD-923
S20070L507	70.00	78.00	9.20	8.20	PU	PUD-412

Bold sizes are readily available in stock.
Other materials are available on request.

S20

Single Acting Rod Seal

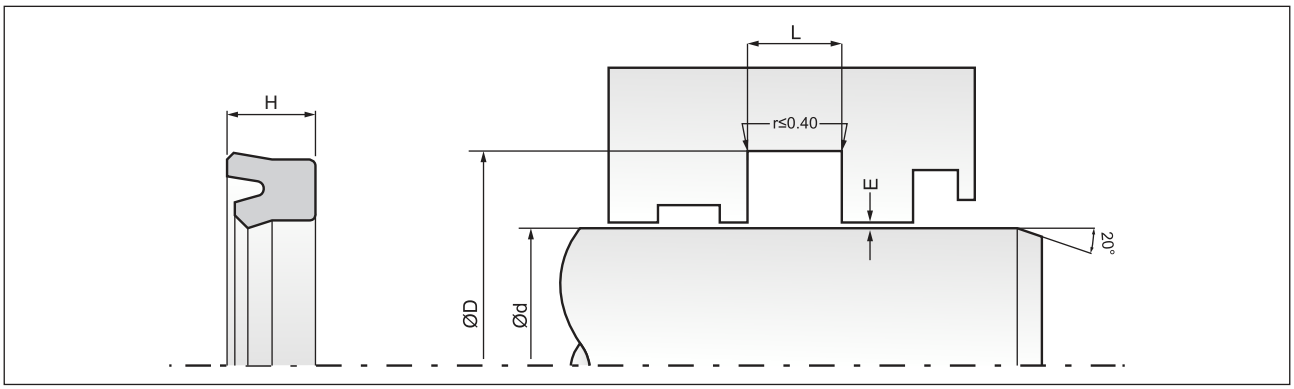

Part No.	d (f8)	D (H9)	L (+0.2)	H	Material	Mould No.
S200701107	70.00	78.00	12.50	11.50	NBR	SUD-870
S20070L503	70.00	80.00	6.50	6.00	PU	PUD-378
S200706704	70.00	80.00	6.70	6.20	FKM	SUD-1930
S200701109	70.00	80.00	6.70	6.20	NBR	SUD-1931
S20070L511	70.00	80.00	7.30	6.80	PU	PUD-888
S20070L522	70.00	80.00	8.90	7.90	PU	PUD-1095
S20070L521	70.00	80.00	11.00	10.00	PU	PUD-1074
S200706613	70.00	80.00	11.00	10.00	FKM	SUD-2019
S200706608	70.00	80.00	12.00	11.00	FKM	SUD-1716
S20070L520	70.00	80.00	13.00	12.00	PU	PUD-1030
S200701005	70.00	80.20	7.20	6.70	NBR	SUD-2002
S200700701	70.00	82.00	9.50	8.50	NBR	SUD-1347
S20070L502	70.00	82.00	9.50	8.50	PU	PUD-365
S200706611	70.00	82.00	10.00	9.00	FKM	SUD-1948
S200706702	70.00	82.00	15.00	14.00	FKM	SUD-1060
S200706602	70.00	83.00	9.50	8.50	FKM	SUD-851
S200705915	70.00	83.00	11.00	10.00	PU	PUD-684
S20070L512	70.00	83.00	11.00	10.00	PU	PUD-896
S20070L505	70.00	85.00	9.50	8.50	PU	PUD-402
S200700901	70.00	85.00	10.10	9.10	NBR	SUD-2007
S200706604	70.00	85.00	10.50	9.50	FKM	SUD-1184
S200706607	70.00	85.00	11.00	10.00	FKM	SUD-1670
S20070L513	70.00	85.00	11.00	10.00	PU	PUD-899
S20070L501	70.00	85.00	11.00	10.00	PU	PUD-363
S200706605	70.00	85.00	12.40	11.40	FKM	SUD-1277
S200706606	70.00	85.00	12.50	11.50	FKM	SUD-1436
S200701106	70.00	85.00	12.50	11.50	NBR	SUD-836
S20070L508	70.00	85.00	12.50	11.50	PU	PUD-414
S20070L519	70.00	85.00	12.50	11.50	PU	PUD-955
S200706601	70.00	85.00	13.00	12.00	FKM	SUD-817
S200706609	70.00	85.00	14.00	13.00	FKM	SUD-1751
S200706603	70.00	90.00	11.00	10.00	FKM	SUD-1079
S20070L514	70.00	90.00	13.00	12.00	PU	PUD-907
S20070L510	70.00	90.00	16.00	15.00	PU	PUD-711
S200701110	70.00	90.00	16.00	15.00	NBR	SUD-2070
S200711102	71.00	80.00	6.70	6.20	NBR	SUD-1952
S200716603	71.00	80.00	7.00	6.50	FKM	SUD-1663
S200716602	71.00	80.00	7.50	7.00	FKM	SUD-1072
S20071L501	71.00	81.00	7.00	6.50	PU	PUD-701
S200716601	71.00	85.00	13.00	12.00	FKM	SUD-1053
S20072L501	72.50	82.50	6.50	6.00	PU	PUD-472
S20073L501	73.00	90.00	16.00	15.00	PU	PUD-488
S200731001	73.00	118.00	41.00	40.00	NBR	SUE-702
S200756601	75.00	84.00	7.50	7.00	FKM	SUD-1566
S20075L501	75.00	85.00	6.50	6.00	PU	PUD-399
S20075L502	75.00	85.00	9.20	8.20	PU	PUD-407
S20075L506	75.00	88.00	11.00	10.00	PU	PUD-901
S20075L509	75.00	90.00	11.60	10.60	PU	PUD-1038
S200751102	75.00	90.00	13.00	12.00	NBR	SUD-1710
S20075L505	75.00	90.00	13.00	12.00	PU	PUD-512
S200753401	75.00	90.00	13.00	12.00	EPDM	SUD-508
S20075L507	75.00	95.00	13.00	12.00	PU	PUD-906

Part No.	d (f8)	D (H9)	L (+0.2)	H	Material	Mould No.
S20075L504	75.00	95.00	15.60	14.60	PU	PUD-481
S200758401	75.00	95.00	16.00	15.00	NBR/FABRIC	SUD-2127
S200761102	76.00	87.60	10.00	9.00	NBR	SUD-889
S20076L502	76.20	88.90	10.50	9.50	PU	PUD-505
S20077L502	77.00	87.00	13.00	12.00	PU	PUD-456
S20077L501	77.50	87.50	6.50	6.00	PU	PUD-453
S20078L401	78.00	86.00	9.60	8.60	PU	PUD-673
S020781001	78.00	86.00	14.50	13.50	NBR	SUD-1995
S200786701	78.00	100.00	13.00	12.00	FKM	SUD-1836
S200801105	80.00	88.00	7.50	7.00	NBR	SUD-952
S20080L512	80.00	88.00	9.50	8.50	PU	PUD-704
S20080L401	80.00	88.00	9.60	8.60	PU	PUD-595
S20080L506	80.00	88.00	11.00	10.00	PU	PUD-593
S200808301	80.00	88.00	12.50	11.50	NBR/FABRIC	SUD-1223
S20080L503	80.00	90.00	6.50	6.00	PU	PUD-349
S20080L507	80.00	90.00	12.00	11.00	PU	PUD-601
S20080L509	80.00	90.00	13.00	12.00	PU	PUD-676
S200801104	80.00	92.00	8.00	7.50	NBR	SUD-864
S200806703	80.00	92.00	9.50	8.50	FKM	SUD-1017
S20080L508	80.00	92.00	9.70	8.70	PU	PUD-623
S20080L527	80.00	92.00	9.70	8.70	PU	PUD-1028
S200806701	80.00	92.00	10.00	9.00	FKM	SUD-948
S20080L505	80.00	92.00	10.60	9.60	PU	PUD-535
S20080L517	80.00	92.00	15.00	14.00	PU	PUD-903
S20080L515	80.00	93.00	11.00	10.00	PU	PUD-900
S200806604	80.00	94.50	13.50	12.50	FKM	SUD-1541
S20080L504	80.00	95.00	9.40	8.40	PU	PUD-444
S20080L516	80.00	95.00	11.00	10.00	PU	PUD-898
S20080L525	80.00	95.00	11.00	10.00	PU	PUD-1025
S200806601	80.00	95.00	11.00	10.00	FKM	SUD-928
S200801001	80.00	95.00	12.30	11.30	NBR	SUD-798
S200806605	80.00	95.00	12.30	11.30	FKM	SUD-1547
S200805908	80.00	95.00	12.40	11.40	PU	PUD-591
S200801106	80.00	95.00	12.50	11.50	NBR	SUD-1028
S20080L511	80.00	95.00	12.50	11.50	PU	PUD-747
S200806603	80.00	95.00	13.00	12.00	FKM	SUD-1052
S200800901	80.00	100.00	12.50	11.50	NBR	SUD-1220
S20080L518	80.00	100.00	13.00	12.00	PU	PUD-905
S200821101	82.00	100.00	9.00	8.00	NBR	SUD-1607
S200840901	82.00	102.00	9.50	8.50	NBR	SUE-976
S200836601	83.00	101.00	9.00	8.00	FKM	SUE-629
S200831001	83.00	101.00	12.00	11.00	NBR	SUE-1226
S200838501	83.40	101.60	15.00	14	FKM/FABRIC	SUE-639
S200851102	85.00	97.00	9.50	8.50	NBR	SUD-1743
S200850802	85.00	97.00	10.40	9.40	NBR	SUD-1861
S20085L501	85.00	100.00	10.00	9.00	PU	PUD-398
S20085R301	85.00	100.00	10.20	9.20	PU	PUD-710
S200856701	85.00	100.00	10.20	9.20	FKM	SUD-1953
S20085L504	85.00	105.00	13.00	12.00	PU	PUE-570
S200850801	85.73	98.43	10.52	9.52	NBR	SUD-1284
S20086L501	86.50	96.50	6.50	6.00	PU	PUD-467
S20087C101	87.63	114.80	13.70	12.70	XNBR	SUE-1104

Bold sizes are readily available in stock.
Other materials are available on request.

S20

Single Acting Rod Seal

MAX SPARE LIMITED
QUALITY. PRECISION. SPEED.

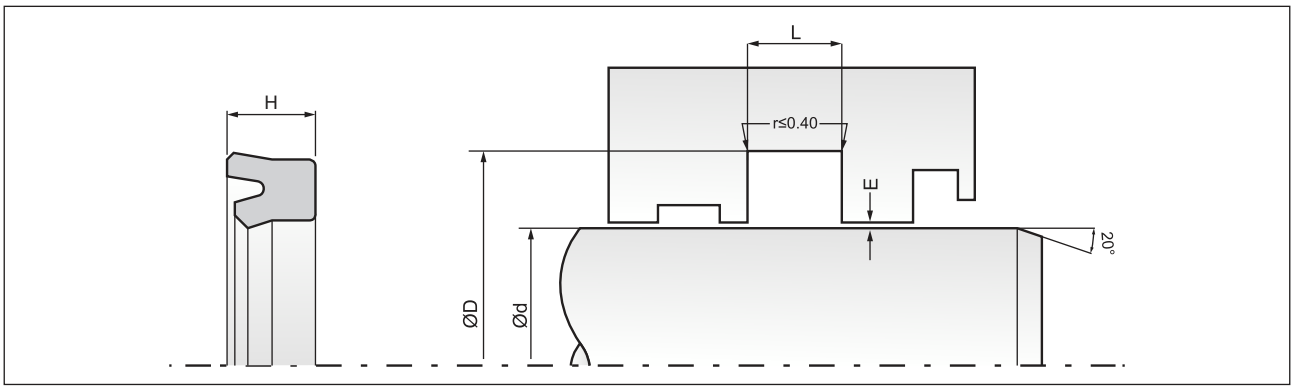

Part No.	d (f8)	D (H9)	L (+0.2)	H	Material	Mould No.
S200886701	88.90	101.60	8.93	7.93	FKM	SUE-651
S20088L501	88.90	103.00	8.60	7.60	PU	PUE-258
S20090L519	90.00	98.00	6.20	5.70	PU	PUD-829
S20090L514	90.00	100.00	4.90	4.40	PU	PUD-574
S20090L512	90.00	100.00	6.50	6.00	PU	PUD-468
S200906701	90.00	100.00	7.00	6.50	FKM	SUD-1065
S200906604	90.00	100.00	10.50	9.50	FKM	SUD-1174
S200906601	90.00	100.00	16.00	15.00	FKM	SUD-1218
S200900801	90.00	102.00	9.50	8.50	NBR	SUE-850
S20090L527	90.00	102.00	9.70	8.70	PU	PUE-658
S200906702	90.00	102.00	15.00	14.00	FKM	SUE-766
S20090L520	90.00	103.00	10.00	9.00	PU	PUE-560
S20090L517	90.00	105.00	9.00	8.00	PU	PUE-468
S20090L511	90.00	105.00	10.00	9.00	PU	PUE-185
S20090R101	90.00	105.00	10.10	9.10	FSL	SUE-1200
S20090L522	90.00	105.00	11.00	10.00	PU	PUE-568
S200901108	90.00	105.00	11.00	10.00	NBR	SUE-573
S200906608	90.00	105.00	11.00	10.00	FKM	SUE-1065
S200908702	90.00	105.00	12.40	11.40	PU	PUE-313
S20090L525	90.00	105.00	12.40	11.40	PU	PUE-657
S200906703	90.00	105.00	12.50	11.50	FKM	SUE-777
S200901110	90.00	105.00	14.00	13.00	NBR	SUE-1145
S200906609	90.00	106.00	8.00	7.50	FKM	SUE-1219
S200906610	90.00	106.00	12.50	11.50	FKM	SUE-1228
S200906606	90.00	110.00	11.00	10.00	FKM	SUE-1177
S20090L523	90.00	110.00	13.00	12.00	PU	PUE-573
S200906603	90.00	110.00	13.00	12.00	FKM	SUE-814
S20090L513	90.00	110.00	16.00	15.00	PU	PUE-334
S20090L521	90.00	110.00	16.00	15.00	PU	PUE-566
S200901109	90.00	114.00	14.50	13.50	NBR	SUE-591
S20093L501	93.00	103.00	6.50	6.00	PU	PUE-324
S20095L502	95.25	107.95	11.31	10.31	PU	PUE-681
S200961101	96.00	102.00	4.80	4.30	NBR	SUE-1439
S200960901	96.60	123.37	17.00	16.00	NBR	SUE-1343
S201008301	100.00	108.00	12.50	11.50	NBR/FABRIC	SUE-808
S20100L507	100.00	109.30	6.20	5.70	PU	PUE-538
S20100L509	100.00	110.00	6.20	5.70	PU	PUE-597
S201001104	100.00	110.00	7.50	7.00	NBR	SUE-599
S201006701	100.00	110.00	10.00	9.00	FKM	SUE-881
S201006603	100.00	114.00	11.00	10.00	FKM	SUE-1063
S201001105	100.00	115.00	9.00	8.00	NBR	SUE-1276
S201003401	100.00	115.00	9.00	8.00	EPDM	SUE-1341
S20100L508	100.00	115.00	10.00	9.00	PU	PUE-562
S20100L502	100.00	115.00	11.00	10.00	PU	PUE-269
S201006702	100.00	115.00	11.00	10.00	FKM	SUE-1178
S201006604	100.00	115.00	12.40	11.40	FKM	SUE-1171
S20100L503	100.00	115.00	13.00	12.00	PU	PUE-302
S20100L505	100.00	120.00	13.00	12.00	PU	PUE-351
S201006602	100.00	120.00	16.00	15.00	FKM	SUE-895
S20100L510	100.00	120.00	16.00	15.00	PU	PUE-659
S201006601	100.00	120.00	17.00	16.00	FKM	SUE-673
S20100L506	100.00	120.00	17.00	16.00	PU	PUE-456

Part No.	d (f8)	D (H9)	L (+0.2)	H	Material	Mould No.
S201011102	101.60	111.10	6.25	5.75	NBR	SUE-1190
S20101L502	101.60	114.30	10.30	9.30	PU	PUE-683
S20101L501	101.60	115.88	12.50	11.50	PU	PUE-267
S201028501	102.00	127.00	13.70	12.7	FKM/FABRIC	SUF-483
S201038401	103.00	130.00	18.00	17.00	NBR/FABRIC	SUF-986
S201058702	105.00	115.00	13.50	12.50	PU	PUE-629
S201051101	105.00	120.00	11.00	10.00	NBR	SUE-1060
S20105L502	105.00	120.00	13.50	12.50	PU	PUE-363
S20105L501	105.00	125.00	12.00	11.00	PU	PUE-301
S20105L503	105.00	125.00	13.00	12.00	PU	PUE-572
S20108L501	108.00	118.00	6.50	6.00	PU	PUE-404
S20109L501	109.00	125.00	10.00	9.00	PU	PUE-515
S20110L505	110.00	120.00	8.70	7.70	PU	PUE-440
S201106605	110.00	124.00	13.00	12.00	FKM	SUE-1066
S201106601	110.00	125.00	10.00	9.00	FKM	SUE-796
S20110L506	110.00	125.00	10.00	9.00	PU	PUE-452
S20110L510	110.00	125.00	10.00	9.00	PU	PUE-569
S201101103	110.00	125.00	10.60	9.60	NBR	SUE-1163
S201101102	110.00	125.00	11.00	10.00	NBR	SUE-660
S20110L511	110.00	125.00	11.00	10.00	PU	PUE-571
S201108301	110.00	125.00	11.00	10.00	NBR/FABRIC	SUE-1261
S20110L402	110.00	125.00	11.90	10.90	PU	PUE-477
S20110L508	110.00	125.00	12.00	11.00	PU	PUE-411
S20110L501	110.00	125.00	13.00	12.00	PU	PUE-337
S201106702	110.00	125.00	13.00	12.00	FKM	SUE-790
S201106704	110.00	125.00	13.50	12.50	FKM	SUE-1318
S20110L504	110.00	125.00	16.00	15.00	PU	PUE-418
S201106603	110.00	125.00	11.00	10	FKM	SUE-992
S201101101	110.00	130.00	13.00	12.00	NBR	SUF-445
S201106606	110.00	130.00	13.00	12.00	FKM	SUF-794
S20110L509	110.00	130.00	16.00	15.00	PU	PUF-433
S201106604	110.00	130.00	16.00	15.00	FKM	SUF-734
S20110L507	110.00	130.00	17.00	16.00	PU	PUF-387
S201106701	110.00	135.00	20.00	19.00	FKM	SUF-548
S201138301	113.00	121.00	12.50	11.50	NBR/FABRIC	SUE-810
S201131101	113.00	121.00	12.50	11.50	NBR	SUE-1215
S201141101	114.30	127.00	6.85	6.35	NBR	SUF-533
S20114L502	114.30	127.00	10.40	9.40	PU	PUF-499
S201145901	114.30	127.00	15.28	14.28	PU	PUF-413
S201141001	114.30	150.00	41.00	40.00	NBR	SUF-511
S20115L501	115.00	130.00	10.00	9.00	PU	PUF-250
S20115L503	115.00	130.00	10.00	9.00	PU	PUF-435
S201153401	115.00	130.00	10.00	9.00	EPDM	SUF-951
S20115L504	115.00	135.00	13.00	12.00	PU	PUF-437
S20115L505	115.00	135.00	15.60	14.60	PU	PUF-560
S20115L502	115.00	135.00	17.00	16.00	PU	PUF-430
S20117Q201	117.45	137.80	31.00	30.00	PU	PUF-379
S201206602	120.00	132.00	15.00	14.00	FKM	SUF-864
S20120L503	120.00	132.00	15.70	14.70	PU	PUF-356
S201206601	120.00	133.00	6.00	5.50	FKM	SUF-851
S20120L501	120.00	135.00	11.20	10.20	PU	PUF-248
S20120L504	120.00	135.00	11.90	10.90	PU	PUF-416

Bold sizes are readily available in stock.
Other materials are available on request.

S20

Single Acting Rod Seal

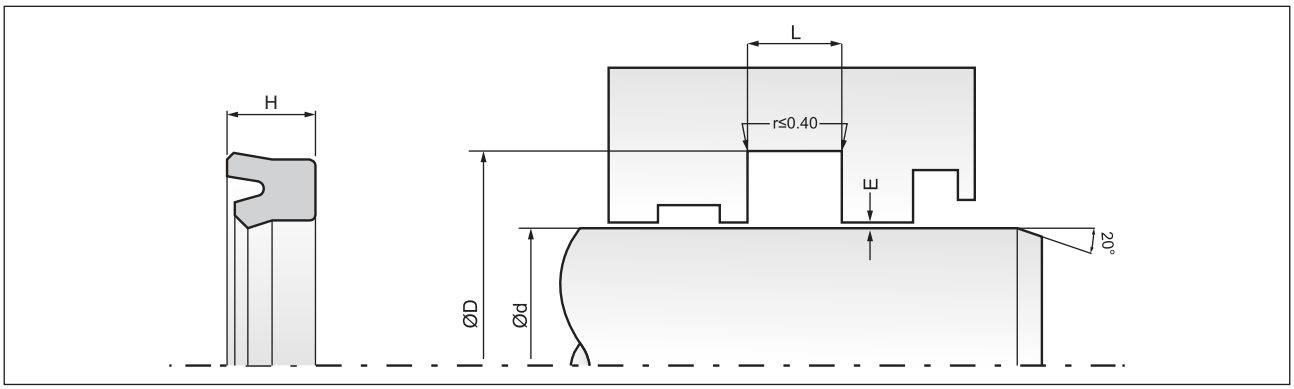

Part No.	d (f8)	D (H9)	L (+0.2)	H	Material	Mould No.
S20120L502	120.00	135.00	12.50	11.50	PU	PUF-282
S201206701	120.00	140.00	14.00	13.00	FKM	SUF-795
S20120L401	120.00	140.00	15.60	14.60	PU	PUF-374
S20120L505	120.00	140.00	16.00	15.00	PU	PUF-490
S201206603	120.00	142.00	16.00	15.00	FKM	SUF-901
S20124L502	124.00	134.00	6.50	6.00	PU	PUF-331
S20124L501	124.00	134.00	6.70	6.20	PU	PUF-249
S201258702	125.00	133.00	6.80	6.30	PU	PUF-386
S201255903	125.00	133.00	9.00	8.00	PU	SUF-927
S20125L501	125.00	135.00	14.50	13.50	PU	PUF-223
S201258705	125.00	135.00	15.50	14.50	PU	PUF-472
S20125L502	125.00	140.00	11.00	10.00	PU	PUF-432
S201256702	125.00	140.00	11.90	10.90	FKM	SUF-782
S201258701	125.00	140.00	12.00	11.00	PU	PUF-327
S201256701	125.00	140.00	15.00	14.00	FKM	SUF-649
S20125L503	125.00	145.00	13.00	12.00	PU	PUF-438
S201256801	125.00	145.00	17.00	16.00	FKM	SUF-914
S20127L502	127.00	146.00	16.00	15.00	PU	PUF-266
S20127L501	127.00	147.00	12.00	11.00	PU	PUF-239
S20130L504	130.00	140.60	15.00	14.00	PU	PUF-428
S201308701	130.00	144.00	10.00	9.00	PU	PUF-385
S201301104	130.00	145.00	9.50	8.50	NBR	SUF-514
S20130L506	130.00	145.00	10.00	9.00	PU	PUF-434
S201303401	130.00	145.00	10.00	9.00	EPDM	SUF-950
S20130L508	130.00	145.00	11.00	10.00	PU	PUF-500
S201306701	130.00	145.00	13.50	12.50	FKM	SUF-920
S20130L502	130.00	145.00	16.00	15.00	PU	PUF-243
S20130L503	130.00	150.00	13.00	12.00	PU	PUF-419
S20130L505	130.00	150.00	17.00	16.00	PU	PUF-431
S201306702	130.00	150.00	17.00	16.00	FKM	SUF-991
S201316701	131.41	137.76	4.00	3.50	FKM	SUF-705
S201336601	133.00	146.00	8.00	7.50	FKM	SUF-698
S201331202	133.35	152.40	13.70	12.70	NBR	SUG-755
S20134L502	134.00	148.00	9.60	8.60	PU	PUF-247
S201358301	135.00	145.00	15.50	14.50	NBR/FABRIC	SUF-612
S201358701	135.00	155.00	15.60	14.60	PU	PUG-215
S201356601	135.00	155.00	16.00	15.00	FKM	SUG-442
S201381001	138.00	170.00	25.00	24.00	NBR	SUG-786
S201386701	138.50	158.50	16.30	15.30	FKM	SUG-619
S201396701	139.70	155.57	10.52	9.52	FKM	SUG-436
S201391002	139.70	158.75	9.00	8.00	NBR	SUG-433
S20140L505	140.00	148.00	6.20	5.70	PU	PUF-410
S201401001	140.00	150.00	6.50	6.00	NBR	SUF-657
S20140L504	140.00	150.00	6.50	6.00	PU	PUF-258
S20140L508	140.00	155.00	10.00	9.00	PU	PUG-348
S20140L506	140.00	155.00	10.00	9.00	PU	PUG-338
S201406603	140.00	155.00	10.00	9.00	FKM	SUG-581
S201406701	140.00	155.00	10.00	9.00	FKM	SUG-743
S20140L503	140.00	155.00	10.00	9.00	PU	PUG-192
S20140L507	140.00	155.00	11.00	10.00	PU	PUG-342
S201401105	140.00	157.00	9.00	8.00	NBR	SUG-769
S201406702	140.00	160.00	11.00	10.00	FKM	SUG-784

Part No.	d (f8)	D (H9)	L (+0.2)	H	Material	Mould No.
S20140L509	140.00	160.00	13.00	12.00	PU	PUG-349
S201406201	140.00	160.00	13.50	12.50	FKM/FABRIC	SUG-791
S201406604	140.00	160.00	14.00	13.00	FKM	SUG-748
S201406601	140.00	160.00	16.00	15.00	FKM	SUG-253
S201401103	140.00	160.00	16.00	15.00	NBR	SUG-392
S201401002	140.00	170.00	26.00	25.00	NBR	SUG-661
S20141L502	141.00	156.00	9.70	8.70	PU	PUG-193
S20145L501	145.00	155.00	6.50	6.00	PU	PUG-261
S20145L515	145.00	160.00	10.00	9.00	PU	PUG-347
S20145L503	145.00	160.00	10.00	9.00	PU	PUG-301
S201453401	145.00	160.00	10.00	9.00	EPDM	SUG-829
S20145L514	145.00	160.00	11.00	10.00	PU	PUG-343
S20145L513	145.00	160.00	14.00	13.00	PU	PUG-331
S201458701	145.00	165.00	15.60	14.60	PU	PUG-255
S20145L402	145.00	165.00	16.00	15.00	PU	PUG-275
S201495901	149.40	160.32	13.70	12.70	PU	PUG-273
S20150L504	150.00	160.60	15.00	14.00	PU	PUG-339
S20150L506	150.00	165.00	10.00	9.00	PU	PUG-346
S20150L505	150.00	165.00	11.00	10.00	PU	PUG-344
S20150L507	150.00	170.00	13.00	12.00	PU	PUG-350
S20150L502	150.00	170.00	15.60	14.60	PU	PUG-257
S20150L501	150.00	170.00	16.00	15.00	PU	PUG-199
S201500601	150.00	175.00	23.00	22.00	NBR/FABRIC	SUG-563
S20150L503	150.00	180.00	19.00	18.00	PU	PUH-258
S20155L502	155.00	165.00	6.50	6.00	PU	PUG-260
S201551101	155.00	165.00	8.00	7.50	NBR	SUG-790
S20155L501	155.00	170.00	10.00	9.00	PU	PUG-194
S20155L503	155.00	170.00	10.00	9.00	PU	PUG-345
S201568701	156.00	166.00	6.70	6.20	PU	PUG-104
S201606601	160.00	170.00	16.00	15.00	FKM	SUG-770
S201606602	160.00	174.00	9.00	8.00	FKM	SUG-818
S201605906	160.00	175.00	10.00	9.00	PU	PUG-230
S20160L501	160.00	175.00	10.50	9.50	PU	PUG-204
S20160U401	160.00	180.00	9.00	8.00	EPDM	SUH-488
S20160L504	160.00	180.00	13.00	12.00	PU	PUH-275
S20160L502	160.00	180.00	16.00	15.00	PU	PUH-212
S201601001	160.00	180.00	17.00	16.00	NBR	SUH-308
S201606702	160.00	185.00	11.50	10.50	FKM	SUH-413
S201608701	160.00	185.00	15.60	14.60	PU	PUH-320
S20160L503	160.00	185.00	17.00	16.00	PU	PUH-272
S201601105	160.00	200.00	16.00	15.00	NBR	SUH-523
S20170L503	170.00	180.00	6.50	6.00	PU	PUH-215
S20170L506	170.00	185.00	10.00	9.00	PU	PUH-274
S20170L507	170.00	190.00	13.00	12.00	PU	PUH-276
S201701001	170.00	190.00	16.60	15.60	NBR	SUH-492
S20170L505	170.00	190.00	17.00	16.00	PU	PUH-271
S20170L504	170.00	195.00	17.00	16.00	PU	PUH-273
S20170L502	170.00	195.00	19.20	18.20	PU	PUH-168
S20171R301	171.45	177.40	4.50	4.00	PU	PUH-191
S20175L501	175.00	190.00	10.00	9.00	PU	PUH-167
S201776701	177.80	193.67	10.52	9.52	FKM	SUH-311
S20178L501	178.00	198.00	13.00	12.00	PU	PUH-247

Bold sizes are readily available in stock.
Other materials are available on request.

S20

Single Acting Rod Seal

MAX SPARE LIMITED
QUALITY. PRECISION. SPEED.

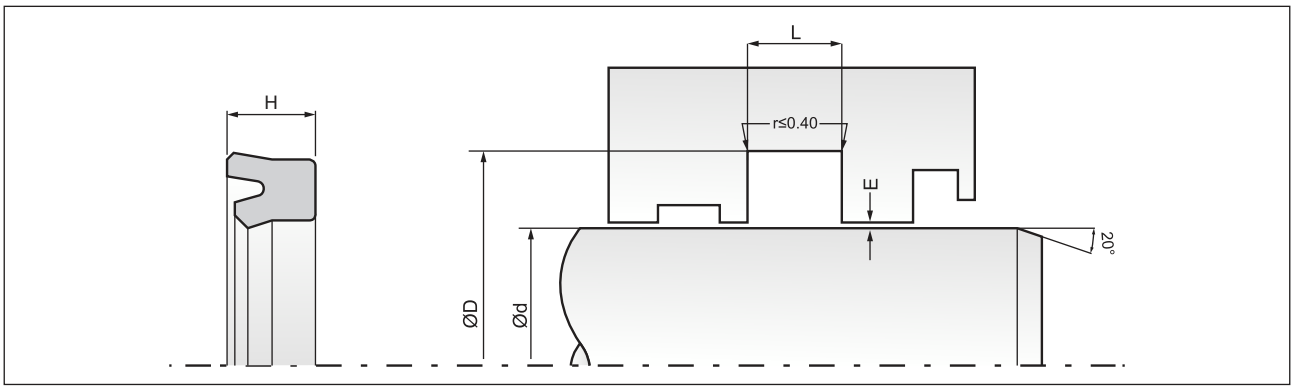

Part No.	d (f8)	D (H9)	L (+0.2)	H	Material	Mould No.
S201781101	178.00	200.00	15.00	14.00	NBR	SUH-394
S20179L501	179.50	200.00	16.50	15.50	PU	PUH-231
S20180L501	180.00	200.00	15.60	14.60	PU	PUH-221
S201801102	180.00	200.00	16.00	15.00	NBR	SUH-275
S20180L502	180.00	205.00	17.00	16.00	PU	PUJ-261
S201820601	181.00	207.50	15.30	14.30	NBR/FABRIC	SUJ-320
S20190L503	190.00	210.00	13.00	12.00	PU	PUJ-230
S20190L502	190.00	215.00	17.00	16.00	PU	PUJ-216
S201975901	197.16	211.12	13.70	12.70	PU	PUJ-217
S20200L503	200.00	220.00	13.00	12.00	PU	PUJ-188
S20200L505	200.00	220.00	15.60	14.60	PU	PUJ-205
S20200L507	200.00	220.00	15.60	14.60	PU	PUJ-254
S20200L501	200.00	225.00	14.50	13.50	PU	PUJ-157
S20200L504	200.00	225.00	15.60	14.60	PU	PUJ-203
S20200L506	200.00	225.00	17.00	16.00	PU	PUJ-221
S20200L502	200.00	225.00	19.20	18.20	PU	PUJ-159
S202058301	205.00	225.00	13.00	12.00	NBR/FABRIC	SUJ-420
S20208L502	208.20	218.44	6.46	5.96	PU	PUJ-280
S20208L501	208.28	222.25	6.49	5.99	PU	PUJ-223
S20209Q201	209.24	219.60	6.69	6.19	PU	PUJ-211
S20210L501	210.00	235.00	17.00	16.00	PU	PUK-175
S20220Q201	220.00	240.00	7.50	7.00	PU	PUK-165
S20220L502	220.00	240.00	15.60	14.60	PU	PUK-169
S20220L503	220.00	245.00	16.00	15.00	PU	PUK-178
S20228L501	228.60	248.56	12.98	11.98	PU	PUK-173
S20230Q201	230.00	260.00	19.00	18.00	PU	PUM-356
S20230L501	230.00	260.00	20.00	19.00	PU	PUM-303
S20231L501	231.00	241.00	15.00	14.00	PU	PUK-143
S20240R301	240.00	260.00	16.00	15.00	PU	PUM-213
S20240L501	240.00	270.00	19.30	18.30	PU	PUM-238
S20250L501	250.00	270.00	13.00	12.00	PU	PUM-293
S202508701	250.00	270.00	17.00	16.00	PU	PUM-364
S20250L502	250.00	280.00	20.00	19.00	PU	PUM-304
S202500801	250.00	300.00	28.00	27.00	NBR	SUM-718

Part No.	d (f8)	D (H9)	L (+0.2)	H	Material	Mould No.
S20260L502	260.00	280.00	15.60	14.60	PU	PUM-258
S20260L501	260.00	280.00	16.00	15.00	PU	PUM-244
S20260L503	260.00	280.00	16.00	15.00	PU	PUM-277
S20260L505	260.00	280.00	16.00	15.00	PU	PUM-350
S202601101	260.00	285.00	19.50	18.50	NBR/FABRIC	SUM-827
S20260L504	260.00	290.00	20.00	19.00	PU	PUM-305
S20279L501	279.40	304.80	17.50	16.50	PU	PUM-281
S20280L501	280.00	300.00	15.60	14.60	PU	PUM-254
S202901101	290.00	320.00	18.50	17.50	NBR/FABRIC	SUM-701
S20300L501	300.00	330.00	20.00	19.00	PU	PUM-306
S203148301	314.30	362.00	23.00	22.00	NBR/FABRIC	SUM-726
S20317L501	317.50	342.50	17.60	16.60	PU	PUM-320
S203206601	320.00	345.00	25.00	24.00	FKM	SUM-642
S20320L502	320.00	345.00	25.00	24.00	PU	PUM-380
S20320L501	320.00	350.00	16.00	15.00	PU	PUM-176
S20320Q201	320.00	350.00	25.00	24.00	PU	PUM-351
S203240901	324.00	339.00	11.00	10.00	NBR	SUM-601
S20350Q201	350.00	380.00	19.00	18.00	PU	PUM-352
S200381L501	381.00	406.40	16.30	15.30	PU	PUM-282
S204450601	445.00	465.00	10.50	9.50	NBR/FABRIC	SUVG-194
S20457O501	457.20	488.95	15.85	14.85	HYT-3	PUM-219
S204600601	460.00	480.00	10.50	9.50	NBR	SUVG-482
S204806601	480.00	500.00	16.00	15.00	CPU	CPU-133
S20528D601	528.65	541.35	9.10	8.10	HNBR	SUVG-466
S200568301	600.00	625.00	16.80	15.80	NBR/FABRIC	SUVG-608
S206408301	640.00	680.00	23.50	22.50	NBR/FABRIC	SUVG-613
S20939S401	939.80	990.60	23.73	22.73	HNBR	SUVG-593
S209991006	1020.00	1070.00	47.00	46.00	NBR/FABRIC	SUVG-667
S209991004	1270.00	1301.75	27.67	26.67	NBR/FABRIC	SLO-641
S209991002	1308.10	1358.90	49.20	48.20	NBR/FABRIC	SLO-628
S20999D601	1320.00	1360.00	25.00	24.00	HNBR	SLO-693
S209991003	1320.80	1352.55	28.57	27.57	NBR/FABRIC	SLO-627
S209991001	1772.00	1820.00	33.00	32.00	NBR	SLO-369

Bold sizes are readily available in stock.
Other materials are available on request.

S21

Single Acting Rod Compact Seal

DETAILS

S21 is a symmetrical single acting seal offering excellent dry rod sealing for both light and medium duty applications. The additional O-ring profile at the bottom provides a back-up to the main sealing lip, providing lubrication, abrasion resistance & remaining unaffected with varying pressures. Standard material for S21 is Polyurethane but we can also supply in NBR material (on request). Due to excellent wear resistance properties of polyurethane, the life expected is 3 times that of NBR.

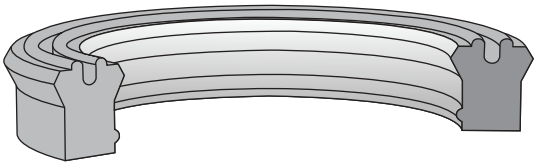

COMPATIBILITY

Mineral oils, bio oils, water soluble & water glycol fluids

MATERIAL

Polyurethane 92 Shore A

APPLICATION

- Light to medium duty hydraulic cylinders.
- Mining equipment.
- Hydraulic presses.

OPERATING CONDITIONS

Temperature Range : -30°C to + 100°C
Pressure : 400 Bar
Speed : 1.0 m/s

FEATURES

- Suitable for power fluctuations.
- Low friction.
- Double lip design offers primary lip protection.
- Increased seal stability.

SURFACE ROUGHNESS

Static : 1.6 µmRa
Dynamic : 0.4 µmRa

INSTALLATION & ASSEMBLY

Careful fitting is a prerequisite for the correct functioning of the seal. Pl. refer to page no. 26 for guidelines.

PERMISSIBLE EXTRUSION GAP	E max (mm)
150 Bar	0.60
250 Bar	0.50
400 Bar	0.40

S21

Single Acting Rod Compact Seal

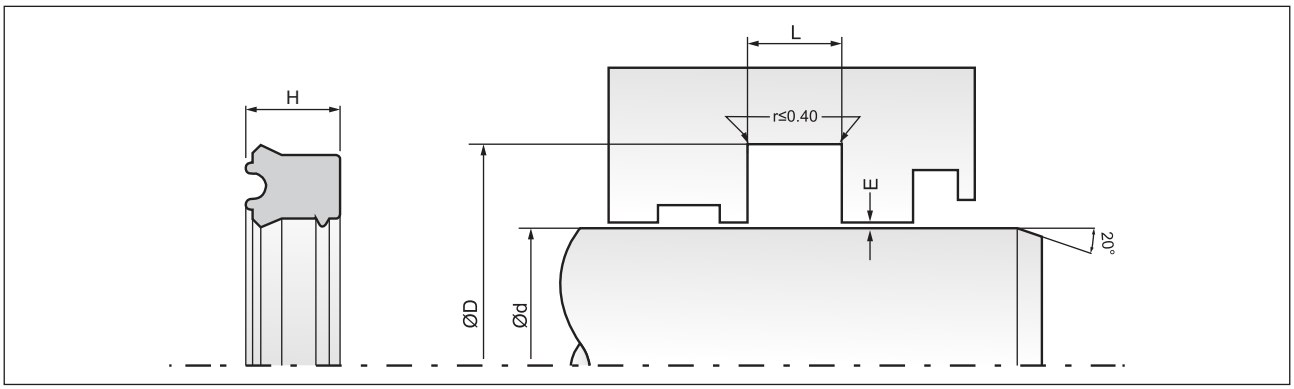

Part No.	d (f8)	D (H9)	H	L (+0.2)	Material	Mould No.
S210186601	18.00	26.00	6.20	5.70	FKM	SUB-1796
S21022L501	22.00	28.00	5.00	4.50	PU	PUB-864
S21024L501	24.00	32.00	6.50	6.00	PU	PUB-543
S21028L502	28.00	34.20	5.70	5.20	PU	PUB-936
S210286701	28.00	36.00	6.20	5.70	FKM	SUB-3708
S21028L501	28.00	36.00	6.50	6.00	PU	PUB-734
S210306701	30.00	38.00	6.20	5.70	FKM	SUB-3709
S21030L501	30.00	38.00	6.50	6.00	PU	PUB-892
S21035L501	35.00	44.00	7.70	7.20	PU	PUB-800
S21036L501	36.00	46.00	11.00	10.00	PU	PUB-1099
S21037L501	37.00	47.00	7.50	7.00	PU	PUB-793
S21037L502	37.00	47.00	9.00	8.00	PU	PUB-794
S21056L501	56.00	66.00	7.00	6.50	PU	PUC-988
S21058L501	58.00	64.00	6.20	5.70	PU	PUC-443
S21060L504	60.00	68.00	6.50	6.00	PU	PUC-487
S21060L502	60.00	68.00	7.00	6.50	PU	PUC-440
S21060L503	60.00	70.00	8.00	7.50	PU	PUC-444
S210706601	70.00	80.00	13.00	12.00	FKM	SUD-1633

Part No.	d (f8)	D (H9)	H	L (+0.2)	Material	Mould No.
S21073L501	73.00	82.40	7.50	7.00	PU	PUD-504
S21078L501	78.00	86.00	9.00	8.00	PU	PUD-675
S21086L501	86.00	96.00	6.50	6.00	PU	PUD-442
S21087L501	87.00	95.00	9.00	8.00	PU	PUD-387
S21087L502	87.00	96.00	6.50	6.00	PU	PUD-431
S21088L501	88.00	96.00	5.80	5.30	PU	PUD-401
S21090L501	90.00	98.00	9.00	8.00	PU	PUD-732
S211006701	100.00	108.00	9.00	8.00	FKM	SUE-888
S21107L501	107.00	115.00	6.50	6.00	PU	PUE-305
S21107L502	107.00	116.00	6.50	6.00	PU	PUE-312
S21119L501	119.50	127.00	10.00	9.00	PU	PUF-265
S21125L501	125.00	133.00	7.00	6.50	PU	PUF-339
S21149L501	149.50	157.00	10.00	9.00	PU	PUG-213
S21165L501	165.50	173.00	10.00	9.00	PU	PUG-219
S21177L501	177.80	196.85	10.52	9.52	PU	PUH-164
S21183L501	183.00	190.50	10.00	9.00	PU	PUH-182
S21201L501	201.50	209.00	10.00	9.00	PU	PUJ-169

Bold sizes are readily available in stock.
Other materials are available on request.

S23

Single Acting Rod Seal

DETAILS

S23 is a symmetrical single acting rod seal for standardised grooves. Standard material for S21 is Polyurethane but we can also supply in NBR material (on request). Due to excellent wear resistance properties of polyurethane, the life expected is 3 times that of NBR.

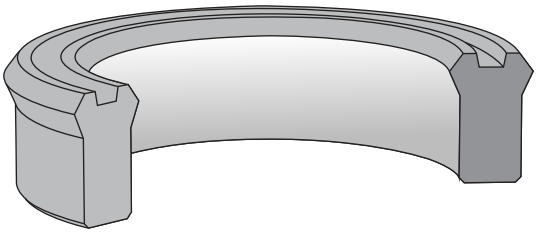

COMPATIBILITY

Mineral oils, bio oils, water soluble & water glycol fluids

MATERIAL

Polyurethane 92 Shore A

APPLICATION

Earth moving equipment, industrial vehicles, agricultural machinery, cranes, injection moulding machines, telescopic cylinders, steering cylinders, loading platforms.

OPERATING CONDITIONS

Temperature Range : -30°C to + 100°C
Pressure : 400 Bar
Speed : 1.0 m/s

FEATURES

- Good static and dynamic tightness.
- Compact compression, high surface roughness in the groove base is permitted.
- Designed for radially restricted housings.

SURFACE ROUGHNESS

Static : 2.0 µmRa
Dynamic : 0.3 µmRa

INSTALLATION & ASSEMBLY

Careful fitting is a prerequisite for the correct functioning of the seal. Pl. refer to page no. 26 for guidelines.

PERMISSIBLE EXTRUSION GAP	E max (mm)
150 Bar	0.60
250 Bar	0.50
400 Bar	0.40

S23

Single Acting Rod Seal

MAX SPARE LIMITED
QUALITY. PRECISION. SPEED.

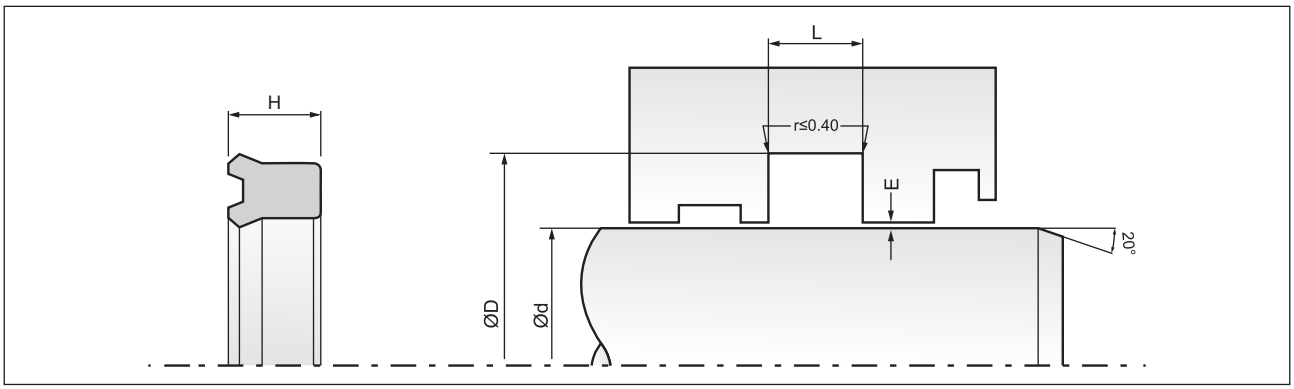

Part No.	d (f8)	D (H9)	H	L (+0.2)	Material	Mould No.
S23003CG01	3.17	9.52	3.67	3.17	PU	PUA-833
S23003CG02	3.17	9.52	6.85	6.35	PU	PUA-832
S23012L501	12.00	16.00	4.00	3.50	PU	PUA-446
S230191001	19.00	30.00	9.00	8.00	NBR	SUB-3594
S23020L502	20.00	25.00	3.50	3.00	PU	PUA-665
S23022L501	22.00	30.00	7.50	7.00	PU	PUB-932
S230256701	25.00	33.00	5.20	4.70	FKM	SUB-1952
S23025L501	25.00	33.00	6.50	6.00	PU	PUB-1059
S23028L501	28.00	38.00	7.50	7.00	PU	PUB-931
S23028L502	28.00	38.00	9.00	8.00	PU	PUB-1706
S23030L501	30.00	38.00	4.00	3.50	PU	PUB-797
S23030L502	30.00	40.00	11.00	10.00	PU	PUB-984
S23032L501	32.00	40.00	6.50	6.00	PU	PUB-1049
S23035L501	35.00	43.00	6.50	6.00	PU	PUB-1751
S230356701	35.00	45.00	7.50	7.00	FKM	SUB-1473
S23036L502	36.00	44.00	6.20	5.70	PU	PUB-1050
S23036L501	36.00	44.00	9.00	8.00	PU	PUB-1121
S23036L501	36.00	44.00	9.00	8.00	PU	PUB-937
S230368701	36.00	46.00	10.80	9.80	PU	PUB-1893
S23038L501	38.00	45.00	7.00	6.50	PU	PUB-1657
S23040L501	40.00	50.00	7.80	7.30	PU	PUB-531
S23040L502	40.00	50.00	11.00	10.00	PU	PUB-720
S23042L501	42.00	50.00	6.40	5.90	PU	PUB-939
S23042L501	42.00	50.00	6.40	5.90	PU	PUB-1612
S23042L502	42.00	50.00	6.50	6.00	PU	PUB-1978
S23045L502	45.00	53.00	7.50	7.00	PU	PUC-871
S230458701	45.00	53.00	9.00	8.00	PU	PUC-606
S23045L501	45.00	55.00	7.80	7.30	PU	PUC-431
S230456701	45.00	55.00	7.80	7.30	FKM	SUC-2235
S23050L505	50.00	58.00	9.00	8.00	PU	PUC-1093
S230506701	50.00	60.00	6.50	6.00	FKM	SUC-2610
S23050L503	50.00	60.00	7.80	7.30	PU	PUC-430
S23050L502	50.00	62.70	10.50	9.50	PU	PUC-403
S23050L504	50.80	60.32	10.52	9.52	PU	PUC-594
S23055L502	55.00	63.00	9.00	8.00	PU	PUC-701
S23055L503	55.00	65.00	11.00	10.00	PU	PUC-1121
S23056L501	56.00	66.00	7.00	6.50	PU	PUC-1209
S23059L501	59.50	67.00	9.00	8.00	PU	PUC-681
S23060L504	60.00	68.00	9.00	8.00	PU	PUC-166
S23060L507	60.00	68.00	9.00	8.00	PU	PUC-1236
S23060L506	60.00	70.00	11.00	10.00	PU	PUC-1120
S230636601	63.00	75.00	11.00	10.00	FKM	SUC-2391
S23065L501	65.00	73.00	9.00	8.00	PU	PUC-879
S23068L501	68.00	76.00	6.50	6.00	PU	PUD-413
S23069L502	69.80	82.50	10.50	9.50	PU	PUD-364
S23070L501	70.00	80.00	13.00	12.00	PU	PUD-441
S23075L501	75.00	85.00	7.70	7.20	PU	PUD-588
S23075L502	75.00	90.00	11.60	10.60	PU	PUD-1037
S23078L501	78.50	84.75	6.80	6.30	PU	PUD-487

Part No.	d (f8)	D (H9)	H	L (+0.2)	Material	Mould No.
S230800901	80.00	90.00	6.70	6.20	NBR	SUD-2052
S230808701	80.00	90.00	11.00	10.00	PU	PUD-626
S23085L502	85.00	95.00	11.00	10.00	PU	PUD-583
S23085L502	85.00	95.00	11.00	10.00	PU	PUD-471
S23085L503	85.00	97.00	9.50	8.50	PU	PUD-892
S23085L501	85.00	97.00	10.00	9.00	PU	PUD-389
S23086L501	86.00	94.00	6.50	6.00	PU	PUD-1044
S23088L502	88.00	96.00	5.80	5.30	PU	PUD-1087
S23088L501	88.00	96.00	6.50	6.00	PU	PUD-596
S23090L501	90.00	98.00	9.00	8.00	PU	PUD-315
S230906701	90.00	105.00	11.00	10.00	FKM	SUE-1167
S230908701	90.00	105.00	13.00	12.00	PU	PUE-545
S23100L502	100.00	108.00	9.00	8.00	PU	PUE-655
S23100L501	100.00	110.00	13.50	12.50	PU	PUE-341
S23105L501	105.00	113.00	6.80	6.30	PU	PUE-255
S23110L501	110.00	120.00	11.00	10.00	PU	PUE-293
S23110L501	110.00	120.00	11.00	10.00	PU	PUE-398
S23110L502	110.00	125.00	13.00	12.00	PU	PUE-533
S231101101	110.00	130.00	15.60	14.60	NBR	SUF-102
S23115L501	115.00	130.00	17.00	16.00	PU	PUF-240
S23125L501	125.00	135.00	13.50	12.50	PU	PUF-267
S231298701	129.00	139.00	11.00	10.00	PU	PUF-330
S231298701	129.00	139.00	11.00	10.00	PU	PUF-355
S23129L501	129.00	139.00	11.00	10.00	PU	PUF-183
S23130L501	130.00	140.00	11.00	10.00	PU	PUF-259
S231358701	135.00	145.00	12.00	11.00	PU	PUF-338
S23149L501	149.00	159.00	11.00	10.00	PU	PUG-182
S231498701	149.00	159.00	11.00	10.00	PU	PUG-259
S231498701	149.00	159.00	11.00	10.00	PU	PUG-277
S23150L501	150.00	160.00	11.00	10.00	PU	PUG-198
S23150L502	150.00	160.00	13.50	12.50	PU	PUG-216
S23152L501	152.00	162.00	12.00	11.00	PU	PUG-203
S231608701	160.00	170.00	12.00	11.00	PU	PUG-262
S23169L501	169.00	179.00	12.00	11.00	PU	PUH-160
S231698701	169.00	179.00	12.00	11.00	PU	PUH-213
S231698701	169.00	179.00	12.00	11.00	PU	PUH-222
S23170L501	170.00	181.00	12.00	11.00	PU	PUH-177
S23175L501	175.00	185.00	12.00	11.00	PU	PUH-179
S23180L501	180.00	190.00	13.50	12.50	PU	PUH-183
S23185L501	185.00	195.00	12.00	11.00	PU	PUH-181
S23191L501	191.00	202.00	12.00	11.00	PU	PUJ-152
S231918701	191.00	202.00	12.00	11.00	PU	PUJ-191
S23195L501	195.00	206.00	12.00	11.00	PU	PUJ-162
S23200L501	200.00	210.00	10.00	9.00	PU	PUJ-164
S23200L502	200.00	210.00	12.00	11.00	PU	PUJ-165
S232008702	200.00	210.00	12.00	11.00	PU	PUJ-190
S232108701	210.00	220.00	13.50	12.50	PU	PUJ-192
S232148701	214.00	226.00	13.30	12.30	PU	PUK-153
S23240L501	240.00	250.00	13.50	12.50	PU	PUK-140

Bold sizes are readily available in stock.
Other materials are available on request.

S33

Single Acting Rod Fluid Seal

DETAILS

S33 seal consists of 2 parts, an external U ring of PU material with a sealing lip and an internal slide ring of abrasion resistant PTFE-Bronze compound with a sealing edge. The slide ring is surrounded by the U ring and seals axially in direct contact with the piston rod.

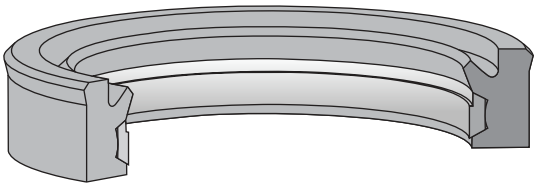

COMPATIBILITY

Mineral oils, water base fluids, fire resistant fluids and compressed air.

MATERIAL

U Ring : Polyurethane 92 shore A
Slide Ring : PTFE Bronze compound

APPLICATION

- Standard Industrial Cylinders.
- Agricultural Machines.
- Industrial Trucks.
- Medium-heavy construction equipment.

OPERATING CONDITIONS

Temperature Range : -30°C to + 100°C
Pressure : 450 Bar
Speed : 1.0 m/s

FEATURES

- High static and dynamic sealing application.
- Low friction.
- Well proven design.
- Tolerant to contamination.

SURFACE ROUGHNESS

Static : 1.6 µmRa
Dynamic : 0.4 µmRa

INSTALLATION & ASSEMBLY

Careful fitting is a prerequisite for the correct functioning of the seal. Pl. refer to page no. 26 for guidelines.

S33

Single Acting Rod Fluid Seal

MAX SPARE LIMITED
QUALITY. PRECISION. SPEED.

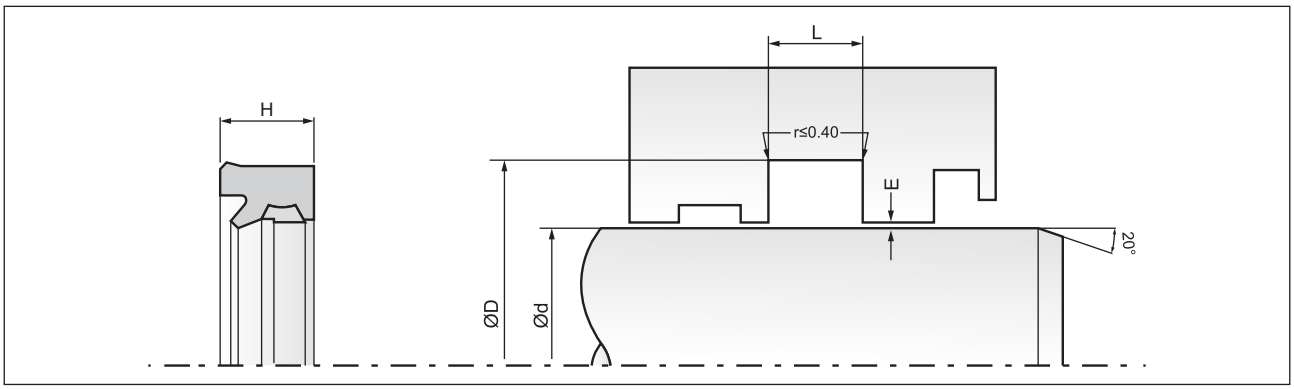

Part No.	d (f8)	D (H9)	L (+0.2)	H	Material	Mould No.
S330190801	19.05	25.40	4.80	4.30	NBR	SUB-1383
S330286601	28.00	36.00	7.50	7.00	FKM	SUB-3715
S33028L501	28.00	36.00	7.50	7.00	PU	PUB-1906
S33030L502	30.00	40.00	11.00	10.00	PU	PUB-1420
S33032L501	32.00	40.00	7.50	7.00	PU	PUB-483
S330327001	32.00	40.00	7.50	7.00	FKM	SUB-2534
S330356601	35.00	43.00	7.50	7.00	FKM	SUB-671
S330366603	35.00	45.00	11.00	10.00	FKM	SUB-2747
S33036L502	36.00	44.00	7.50	7.00	PU	PUB-1905
S330366604	36.00	44.00	9.00	8.00	FKM	SUB-3714
S330366602	36.00	45.00	7.20	6.70	FKM	SUB-2660
S330366704	36.00	46.00	7.80	7.30	FKM	SUB-4059
S330366703	36.00	46.00	9.00	8.00	FKM	SUB-4058
S330386701	38.10	47.80	11.00	10.00	FKM	SUB-3259
S330401001	40.00	56.00	15.10	14.10	NBR	SUC-1879
S330456601	45.00	55.00	11.00	10.00	FKM	SUC-1651
S330455901	45.00	55.00	11.00	10.00	PU	PUC-144
S330506701	50.00	60.00	11.00	10.00	FKM	SUC-859
S330556701	55.00	77.00	11.00	10.00	FKM	SUD-2144
S33056L501	56.00	71.00	13.00	12.00	PU	PUC-182
S330567001	56.00	71.00	13.00	12.00	FKM	SUC-951
S330636601	63.00	78.00	13.00	12.00	FKM	SUD-1280
S33063L501	63.00	78.00	13.00	12.00	PU	PUD-133
S33065L502	65.00	85.00	13.00	12.00	PU	PUD-869
S33068L501	68.00	80.00	5.50	5.00	PU	PUD-968
S33070L503	70.00	80.00	13.00	12.00	PU	PUD-576
S330706702	70.00	85.00	12.40	11.40	FKM	SUD-2072
S33070L501	70.00	85.00	13.00	12.00	PU	PUD-164
S330706601	70.00	85.00	13.00	12.00	FKM	SUD-750
S330706703	70.00	85.00	13.50	12.50	FKM	SUD-2073
S330706602	70.00	85.00	14.00	13.00	FKM	SUD-1342
S330756601	75.00	90.00	13.00	12.00	FKM	SUD-1795
S330806602	80.00	95.00	13.00	12.00	FKM	SUD-904
S33080L501	80.00	95.00	13.00	12.00	PU	PUD-134

Part No.	d (f8)	D (H9)	L (+0.2)	H	Material	Mould No.
S330906603	90.00	105.00	12.40	11.40	FKM	SUE-1423
S330906601	90.00	105.00	13.00	12.00	FKM	SUE-304
S33090L502	90.00	105.00	13.00	12.00	PU	PUE-228
S330906602	90.00	105.00	14.00	13.00	FKM	SUE-939
S33100L501	100.00	115.00	13.00	12.00	PU	PUE-259
S331006603	100.00	115.00	13.00	12.00	FKM	SUE-164
S331006605	100.00	120.00	13.50	12.50	FKM	SUE-1272
S331006604	100.00	120.00	15.00	14.00	FKM	SUE-1262
S331001101	100.00	120.00	17.00	16.00	NBR	SUE-703
S331106601	110.00	125.00	13.00	12.00	FKM	SUE-644
S33110L501	110.00	125.00	13.00	12.00	PU	PUE-253
S33110L502	110.00	130.00	16.00	15.00	PU	PUF-363
S331206702	120.00	140.00	16.50	15.50	FKM	SUF-975
S33120L502	120.00	140.00	17.00	16.00	PU	PUF-242
S33125L502	125.00	145.00	17.00	16.00	PU	PUF-236
S331256601	125.00	145.00	17.00	16.00	FKM	SUF-374
S33140L502	140.00	160.00	16.00	15.00	PU	PUG-283
S331401101	140.00	160.00	16.00	15.00	NBR	SUG-398
S331401102	140.00	160.00	16.70	15.70	NBR	SUG-843
S331406601	140.00	160.00	17.00	16.00	FKM	SUG-413
S33150L501	150.00	170.00	17.00	16.00	PU	PUG-463
S331606701	160.00	180.00	17.00	16.00	FKM	SUH-225
S331706604	170.00	190.00	18.00	17.00	FKM	SUH-328
S331706602	170.00	200.00	17.00	16.00	FKM	SUH-327
S331806601	180.00	200.00	17.00	16.00	FKM	SUH-265
S33180L502	180.00	220.00	17.00	16.00	PU	PUJ-170
S33210L501	210.00	230.00	17.00	16.00	PU	PUK-177
S33220L501	220.00	240.00	17.00	16.00	PU	PUK-163
S332606601	260.00	280.00	16.50	15.50	FKM	SUM-750
S332806701	280.00	300.00	17.00	16.00	FKM	SUM-841
S333206601	320.00	350.00	22.00	21.00	FKM	SUM-538
S335301001	530.00	547.00	14.00	13.00	NBR	SUVG-536
S336475601	647.00	687.00	26.50	25.50	NBR	SUVG-285

Bold sizes are readily available in stock.
Other materials are available on request.

S28

Single Acting Rod Seal

DETAILS

S28 is a high-pressure rod seal. It comprises of U seal energized with O Ring and Back up ring. The u seal with O ring energiser to ensure complete lip actuation under all pressure conditions. The S28 is also available without back-up ring.

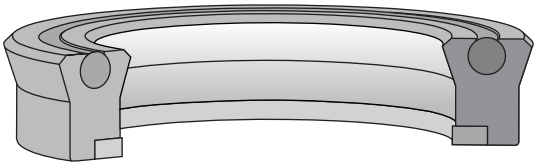

COMPATIBILITY

Hydraulic mineral oils, bio oils, water soluble and water glycol fluids.

MATERIAL

U Seal : Polyurethane 92 shore A
O Ring : NBR 70/75 Shore A
Back Up Ring : POM / Nylon

APPLICATION

- Standard Industrial Cylinders.
- Agricultural Machines.
- Industrial Trucks.
- Medium-heavy duty cylinders.

OPERATING CONDITIONS

Temperature Range : -30°C to + 100°C
Pressure : 700 Bar
Speed : 1.0 m/s

FEATURES

- Symmetrical design for optimal sealing performance.
- High Pressure and shock loading capacity.
- Highly extrusion resistant in large gap conditions.
- Easy to install.

SURFACE ROUGHNESS

Static : 1.6 µmRa
Dynamic : 0.4 µmRa

INSTALLATION & ASSEMBLY

Careful fitting is a prerequisite for the correct functioning of the seal. Pl. refer to page no. 26 for guidelines.

PERMISSIBLE EXTRUSION GAP	E max (mm)
150 Bar	0.60
250 Bar	0.50
500 Bar	0.40
700 Bar	0.25

S28

Single Acting Rod Seal

MAX SPARE LIMITED
QUALITY. PRECISION. SPEED.

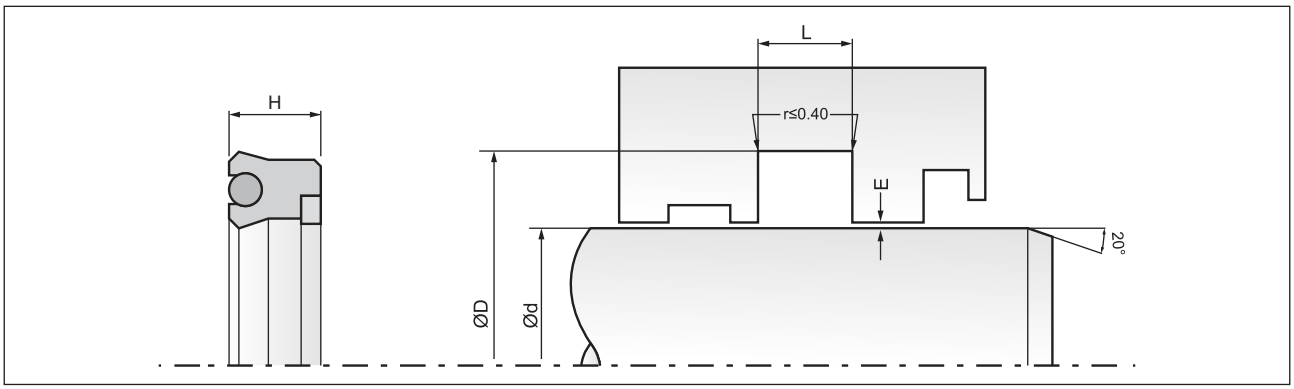

Part No.	d (f8)	D (H8)	L (+0.2)	H	Material	Mould No.
S28022L501	22.40	30.40	5.50	5.00	PU	PUB-1433
S28025L501	25.00	37.00	7.50	7.00	PU	PUB-1509
S280406501	40.00	50.00	6.50	6.00	FKM	SUB-3329
S28040L504	40.00	50.00	7.80	7.30	PU	PUB-536
S28040L503	40.00	55.00	12.00	11.50	PU	PUC-513
S28050L502	50.00	60.00	7.80	7.30	PU	PUC-703
S281050L501	50.00	65.00	12.00	11.50	PU	PUC-514
S280543401	54.00	69.00	10.80	10.30	EPDM	SUC-2238
S280566701	56.00	70.00	12.50	12.00	FKM	SUC-1936
S280566701	56.00	71.00	13.00	12.50	NBR	SUC-2096
S280576801	57.15	69.85	10.02	9.52	FKM	SUC-1576
S280606701	60.00	70.00	5.50	5.00	FKM	SUC-2025
S28060L501	60.00	75.00	12.00	11.50	PU	PUC-515
S28060R301	60.00	75.00	12.00	11.50	PU	PUC-857
S28073S401	73.02	82.55	10.02	9.52	HNBR	SUD-1685
S28073S401	73.02	82.55	10.02	9.52	PEEK	PUD-855
S280753401	75.00	90.00	10.80	10.30	EPDM	SUD-1724

Part No.	d (f8)	D (H8)	L (+0.2)	H	Material	Mould No.
S280906701	90.00	105.00	9.50	9.00	FKM	SUE-825
S28095L501	95.25	104.77	10.02	9.52	NBR	PUE-542
S280951101	95.25	104.77	10.02	9.52	NBR	SUE-1144
S280965901	96.00	104.00	11.60	11.10	PU	PUE-598
S28100L502	100.00	110.00	12.50	12.00	PU	PUE-700
S28100L501	100.00	115.00	17.00	16.50	PU	CS-1635
S28107D601	107.69	119.98	14.47	13.97	HNBR	SUE-740
S281076601	107.95	127.00	14.50	14.00	FKM	SUF-525
S28130L501	130.00	150.00	15.00	14.50	PU	PUF-448
S28138D601	138.48	151.13	15.20	14.70	HNBR	SUG-477
S28140L501	140.00	160.00	15.00	14.50	PU	PUG-181
S28158L501	158.00	166.00	11.60	11.10	PU	CS-1507
S28178L501	178.58	203.98	19.50	19.00	PU	SUJ-187
S282006701	200.00	220.00	15.50	15.00	FKM	SUJ-286
S283006701	300.00	330.00	20.50	20.00	FKM	SUM-765
S283151101	315.00	355.00	31.70	31.20	NBR	SUM-102

Bold sizes are readily available in stock.
Other materials are available on request.

S29

Single Acting Rod Seal

DETAILS

S29 is designed for the use of heavy duty application. It comprises of twin lip rod seal with a unique profile NBR energizer and thermoplastic back up ring. The rubber energizer ensures complete lip actuation under all pressure conditions and the back up ring enables the seal to withstand side loads extreme pressure, peaks even with the extrusion gaps.

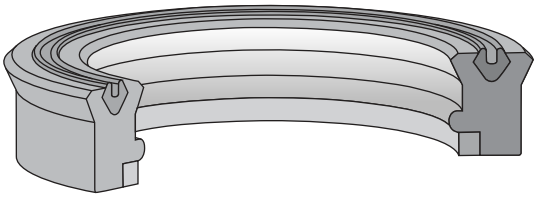

COMPATIBILITY

Hydraulic mineral oils, bio oils, water soluble and water glycol fluids.

MATERIAL

U Seal : Polyurethane 92 shore A
O Ring : NBR 70/75 Shore A
Back Up Ring : POM / Nylon

APPLICATION

- Standard Industrial Cylinders.
- Agricultural Machines.
- Industrial Trucks.
- Medium-heavy duty cylinders.

OPERATING CONDITIONS

Temperature Range : -30°C to + 100°C
Pressure : 700 Bar
Speed : 1.0 m/s

FEATURES

- Double lip design after primary lip protection.
- High pressure & shock loading capacity.
- Twin lip design.
- Low-pressure sealing.
- Increased stability.
- Long service life.

SURFACE ROUGHNESS

Static : 1.6 µmRa
Dynamic : 0.4 µmRa

INSTALLATION & ASSEMBLY

Careful fitting is a prerequisite for the correct functioning of the seal. Pl. refer to page no. 26 for guidelines.

PERMISSIBLE EXTRUSION GAP	E max (mm)
150 Bar	0.60
250 Bar	0.50
500 Bar	0.40
700 Bar	0.25

S29

Single Acting Rod Seal

MAX SPARE LIMITED
QUALITY. PRECISION. SPEED.

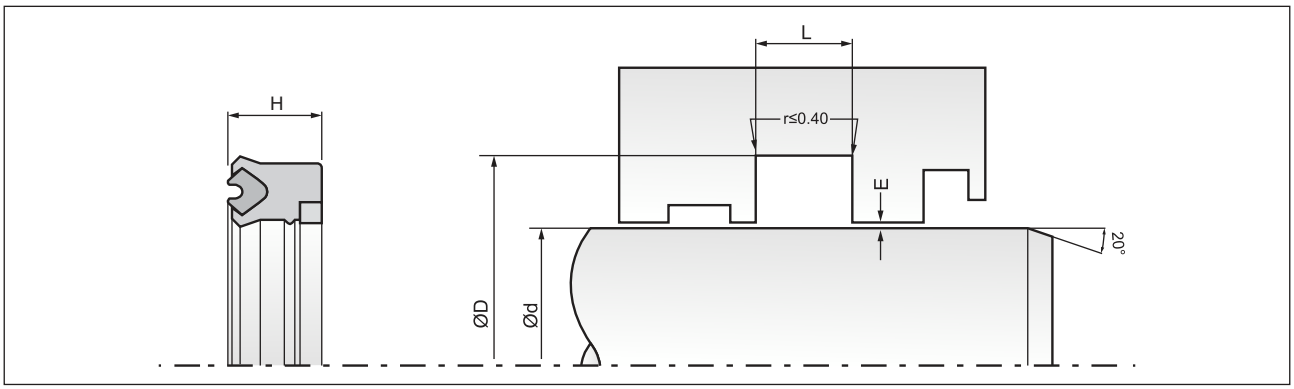

Part No.	d (f8)	D (H9)	L (+0.2)	H	Material	Mould No.
S29012L501	12.00	24.00	13.00	12.00	PU	CS-2656
S29015S801	15.00	25.00	9.00	8.00	NBR	CS-2888
S290165901	16.00	26.00	12.00	11.00	NBR	CS-2886
S29016L501	16.00	28.00	13.00	12.00	PU	CS-2704
S29022L501	22.00	35.00	11.00	10.00	PU	CS-1707
S290286002	28.00	40.00	11.00	10.00	NBR	CS-3120
S29030L501	30.00	40.00	7.80	7.30	NBR	CS-2068
S290316701	31.75	41.27	8.92	7.92	FKM	SUB-2728
S29031L501	31.75	41.28	6.85	6.35	NBR	CS-2067
S290316401	31.75	50.00	12.11	11.11	FKM	CS-2982
S29036L501	36.00	46.00	7.80	7.30	PU	CS-2220
S29036O301	36.40	44.36	4.15	3.65	NBR	SUB-2952
S29037O301	37.00	47.00	4.90	4.40	NBR	SUB-3824
S290386701	38.10	47.62	8.92	7.92	FKM	SUB-2729
S29039O301	39.55	47.55	4.17	3.67	NBR	SUB-3825
S29040L501	40.00	50.00	7.80	7.30	NBR	CS-2045
S29040L502	40.00	50.00	7.80	7.30	PU	CS-2221
S29040O301	40.15	50.15	4.90	4.40	NBR	SUC-2569
S290441001	44.45	57.15	4.90	4.40	NBR	SUC-1530
S29044L501	44.45	57.15	10.52	9.52	PU	PUC-866
S29044L501	44.45	57.15	10.52	9.52	NBR	SUC-1956
S290451001	45.90	53.90	4.17	3.67	NBR	SUC-1593
S290461001	46.95	59.55	6.00	5.50	NBR	SUC-2641
S29050L503	50.00	60.00	7.80	7.30	NBR	CS-2042
S29050L501	50.80	60.33	10.53	9.53	NBR	CS-2044
S290501001	50.80	63.50	4.90	4.40	NBR	SUC-1534
S29050L502	50.80	63.50	10.53	9.53	NBR	CS-2043
S290506701	50.80	66.67	10.52	9.52	FKM	CS-2858
S29052O301	52.25	60.25	4.17	3.67	NBR	SUC-2572
S290571001	57.15	69.85	4.90	4.40	NBR	SUC-1556
S29060L503	60.00	72.00	9.60	8.60	NBR	CS-2040
S29060L502	60.00	75.00	12.40	11.40	NBR	CS-2041
S29045L501	60.00	75.00	13.50	12.50	NBR	CS-1950
S290601001	60.32	73.02	4.90	4.40	NBR	SUC-1537
S290630802	63.00	75.00	9.00	8.00	NBR	CS-2233
S290630801	63.00	75.00	10.50	9.50	NBR	CS-2070
S29065L501	65.00	80.00	10.00	9.00	NBR	CS-2039
S29065L502	65.00	80.00	11.00	10.00	NBR	CS-2766
S290691001	69.85	82.55	4.90	4.40	NBR	SPA-3419
S29070L502	70.00	85.00	11.00	10.00	NBR	CS-2037
S29070L501	70.00	85.00	12.40	11.40	NBR	CS-2038
S29075L501	75.00	88.00	11.00	10.00	NBR	CS-2036
S29075L502	75.00	90.00	10.00	9.00	NBR	CS-2049
S290761001	76.20	88.90	4.90	4.40	NBR	SUD-1186
S29076L502	76.20	88.90	10.53	9.53	NBR	CS-2047
S29076L501	76.20	92.08	13.70	12.70	NBR	CS-2048
S290781002	78.74	91.32	5.98	5.48	NBR	SUD-1339
S29080L501	80.00	93.00	11.00	10.00	NBR	CS-2046
S29080L502	80.00	95.00	12.40	11.40	NBR	CS-2253
S29085L501	85.00	97.00	9.60	8.60	NBR	CS-2050

Part No.	d (f8)	D (H9)	L (+0.2)	H	Material	Mould No.
S290886601	88.90	101.60	10.00	9.00	FKM	CS-2181
S29088L501	88.90	101.60	10.53	9.53	NBR	CS-2054
S29088L502	88.90	104.78	13.70	12.70	NBR	CS-2053
S29090L502	90.00	105.00	11.00	10.00	NBR	CS-2052
S29090L504	90.00	105.00	12.40	11.40	NBR	CS-2254
S29090L503	90.00	110.00	15.00	14.00	PU	CS-2232
S29095L503	95.00	110.00	11.00	10.00	NBR	CS-2051
S29095L502	95.00	110.00	15.00	14.00	PU	CS-1583
S29099L501	99.00	115.00	15.50	14.50	PU	CS-2230
S29100L502	100.00	115.00	15.15	14.15	PU	CS-2231
S291001001	100.00	120.00	15.50	14.50	NBR	CS-1966
S29100L501	100.00	120.00	15.50	14.50	NBR	CS-2055
S29100L503	100.00	125.00	16.00	15.00	NBR	CS-2235
S29105L501	105.00	120.00	13.00	12.00	NBR	CS-2059
S29105L502	105.00	120.00	15.50	14.50	NBR	CS-2058
S29110L503	110.00	125.00	13.00	12.00	NBR	CS-2056
S29110L502	110.00	130.00	13.00	12.00	NBR	CS-2057
S29110L504	110.00	130.00	15.50	14.50	NBR	CS-2060
S291106701	110.00	130.00	15.60	14.60	FKM	CS-2194
S29110L501	110.00	135.00	21.00	20.00	PU	PUF-325
S291101001	110.03	126.83	7.78	7.28	NBR	SUF-961
S291200801	120.00	135.00	15.00	14.00	NBR	CS-1971
S29120L501	120.00	140.00	13.00	12.00	NBR	CS-2061
S291221001	122.94	139.74	7.73	7.23	NBR	SUF-930
S291291001	129.26	146.06	7.78	7.28	NBR	SUF-646
S291291002	129.80	142.38	5.98	5.48	NBR	CS-1499
S29130L501	130.00	150.00	15.50	14.50	NBR	CS-2062
S291351002	135.74	152.54	7.78	7.28	NBR	SUG-802
S291351001	135.84	145.84	4.89	4.39	NBR	SUF-746
S29140L501	140.00	155.00	15.50	14.50	PU	CS-1555
S29140L502	140.00	160.00	15.50	14.50	NBR	CS-2063
S291421001	142.26	152.26	4.90	4.40	NBR	SUG-804
S291481001	148.46	165.26	7.78	7.28	NBR	SUG-803
S29152L501	152.40	171.45	16.88	15.88	NBR	CS-2064
S291691001	169.62	182.22	5.99	5.49	NBR	SUH-548
S29180L501	180.00	205.00	19.20	18.20	NBR	CS-2065
S29185L501	185.00	205.00	19.50	18.50	NBR	CS-2066
S29203L501	203.20	228.60	20.05	19.05	PU	SUK-262
S29203L501	203.20	228.60	20.05	19.05	PU	PUK-141
S29220L501	220.00	240.00	17.00	16.00	PU	PUK-152
S29241L501	241.30	260.35	10.52	9.52	PU	PUM-165
S292561001	256.70	266.70	4.90	4.40	NBR	SUM-810
S293091001	309.13	329.13	9.80	8.80	NBR	SUM-809
S29315L501	315.00	355.00	32.00	31.00	PU	PUM-327
S294206002	420.00	460.00	32.00	31.00	NBR	SUVG-662
S294606003	460.00	490.00	31.00	30.00	NBR/FABRIC	SUVG-545
S295400803	540.00	580.00	34.50	33.50	NBR	SPA-6962
S295400803	540.00	580.00	34.50	33.50	NBR	SLO-364
S296600802	660.00	710.00	36.40	35.40	NBR	SLO-402

Bold sizes are readily available in stock.
Other materials are available on request.

S32

Single Acting Rod Seal

DETAILS

S32 is a robust single acting rod seal designed to meet high pressure subject to severe load and vibration conditions. It compraises of a main sealing ring manufactured in high compression set resistant nitrile rubber, a u ring made of fabric reinforced nitrile rubber and an back-up ring made of POM / Nylon material. This seal has a pressure rating up to 700 Bar.

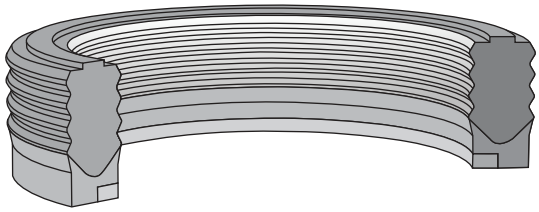

COMPATIBILITY

Hydraulic fluids, mineral oil based hydraulic fluids, water and water glycol emulsions.

MATERIAL

Sealing Ring : Nitrile Rubber 75/80 Shore A
Support Ring : Nitrile Rubber / fabric 75/80 Shore A
Back-up Ring : POM / Nylon

APPLICATION

- Standard Industrial Cylinders.
- Agricultural Machines.
- Industrial Trucks.
- Medium-heavy construction equipment.
- Earthmoving machines.

OPERATING CONDITIONS

Temperature Range : -20°C to + 100°C
Pressure : 700 Bar
Speed : 0.5 m/s

FEATURES

- High static and dynamic sealing application.
- Effective sealing during vibration and shock loading.
- Well proven design.
- Extrusion resistance at high pressure.

SURFACE ROUGHNESS

Static : 0.8 µmRa
Dynamic : 0.3 µmRa

PERMISSIBLE EXTRUSION GAP	E max (mm)
400 Bar	0.40
700 Bar	0.20

S32

Single Acting Rod Seal

MAX SPARE LIMITED
QUALITY. PRECISION. SPEED.

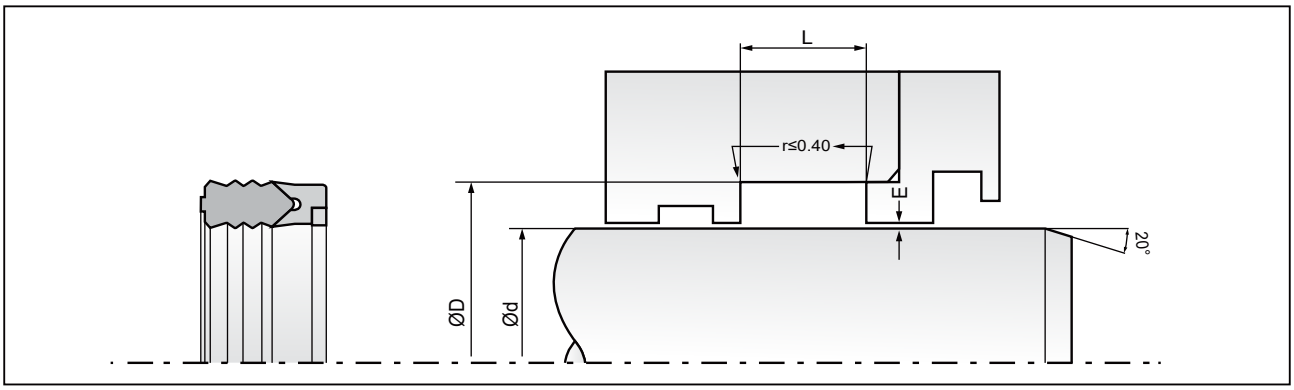

Part No.	d (h9)	D (H10)	L (+0.4)	Material	Mould No.
S320201001	20.00	33.00	20.00	NBR/FABRIC	CS-554
S320226701	22.00	30.00	5.70	FKM	SUB-1981
S320251001	25.00	37.00	22.50	NBR/FABRIC	SUB-2226
S320281002	28.00	41.00	20.00	NBR/FABRIC	CS-708
S320301002	30.00	43.00	14.80	NBR	SUB-1847
S320301001	30.00	43.00	20.00	NBR/FABRIC	CS-2108
S320301001	30.00	43.00	20.00	NBR/FABRIC	CS-686
S320351002	35.00	47.00	22.50	NBR/FABRIC	CS-854
S320351001	35.00	50.00	22.50	NBR/FABRIC	CS-555
S320361001	36.00	51.00	22.50	NBR/FABRIC	CS-556
S320401006	40.00	52.00	22.50	NBR/FABRIC	CS-840
S320401005	40.00	55.00	16.60	NBR	SUC-1326
S320401007	40.00	55.00	22.00	NBR/FABRIC	SUC-1823
S320401002	40.00	55.00	22.50	NBR/FABRIC	CS-548
S320401004	40.00	55.00	22.62	NBR/FABRIC	CS-576
S320401003	40.00	60.00	30.00	NBR/FABRIC	CS-557
S320451001	45.00	60.00	22.50	NBR/FABRIC	CS-706
S320451002	45.00	70.00	21.00	NBR/FABRIC	SUC-1666
S320501007	50.00	65.00	16.60	NBR	SUC-1327
S320501005	50.00	65.00	24.50	NBR/FABRIC	CS-558
S320501009	50.00	65.00	26.50	NBR/FABRIC	CS-1013
S320501008	50.00	70.00	30.00	NBR/FABRIC	CS-841
S320501006	50.80	66.67	25.00	NBR/FABRIC	CS-559
S320551001	55.00	70.00	22.50	NBR/FABRIC	CS-560
S320551002	55.00	70.00	25.00	NBR/FABRIC	CS-704
S320561001	56.00	71.00	25.00	NBR/FABRIC	CS-1014
S320608301	60.00	75.00	6.70	NBR/FABRIC	CS-1245
S320601009	60.00	75.00	16.60	NBR	SUC-1328
S320601002A	60.00	75.00	22.50	NBR	SUC-871
S320601008	60.00	75.00	25.50	NBR/FABRIC	CS-577
S320601010	60.00	80.00	34.90	NBR/FABRIC	CS-842
S320631001	63.00	83.00	27.00	NBR	CS-2661
S320651002	65.00	85.00	27.00	NBR	CS-1009
S320651001	65.00	85.00	29.00	NBR/FABRIC	CS-1015
S320708301	70.00	83.00	25.00	NBR/FABRIC	CS-2033
S320701004	70.00	85.00	22.50	NBR/FABRIC	CS-687
S320701002	70.00	90.00	32.00	NBR/FABRIC	CS-561
S320761001	76.50	96.50	32.50	NBR/FABRIC	CS-1016
S320806001	80.00	100.00	30.00	NBR/FABRIC	CS-562
S320851002	85.00	98.00	25.00	NBR/FABRIC	CS-1193
S320851003	85.00	100.00	22.50	NBR/FABRIC	CS-1017
S320851001	85.00	105.00	30.00	NBR/FABRIC	CS-707
S3209010022	90.00	105.00	33.53	NBR/FABRIC	CS-574
S320901001	90.00	110.00	30.00	NBR/FABRIC	CS-563
S320951001	95.00	110.00	16.50	NBR	CS-723
S320951002	95.00	115.00	27.00	NBR	CS-1374
S321001001	100.00	114.30	24.21	NBR/FABRIC	CS-843
S321001002	100.00	115.00	23.00	NBR	CS-1010
S321001004	100.00	120.00	30.00	NBR	CS-2215
S321051003	105.00	120.00	34.00	NBR/FABRIC	CS-564
S321101003	110.00	130.00	32.50	NBR/FABRIC	CS-1018
S321151001	115.00	130.00	30.00	NBR/FABRIC	CS-255

Bold sizes are readily available in stock.
Other materials are available on request.

S32

Single Acting Rod Seal

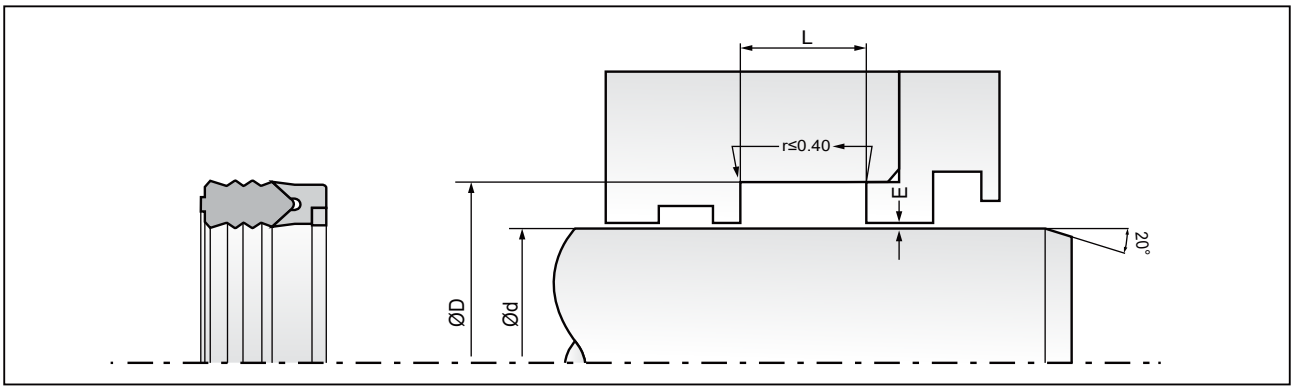

Part No.	d (h9)	D (H10)	L (+0.4)	Material	Mould No.
S321201005	120.00	135.00	28.00	NBR	CS-2651
S321301001	130.00	150.00	28.00	NBR/FABRIC	CS-1019
S321401001	140.00	160.00	28.00	NBR/FABRIC	CS-1154
S321401003	140.00	160.00	30.00	NBR	CS-2548
S321501001	150.00	170.00	28.00	NBR/FABRIC	CS-565
S321551001	155.00	175.00	28.00	NBR/FABRIC	CS-566
S321601002	160.00	180.00	28.00	NBR/FABRIC	CS-331
S321601005	160.00	180.00	28.00	NBR	CS-2662
S321651003	165.00	185.00	30.00	NBR	CS-2216
S32180E301	180.00	205.00	32.00	NBR/FABRIC	CS-1552
S321801001	180.00	205.00	35.00	NBR	CS-2660
S321906001	190.00	215.00	33.00	NBR/FABRIC	CS-2654
S322208301	220.00	245.00	35.00	NBR/FABRIC	CS-2228
S532481002	248.92	268.92	22.00	NBR/FABRIC	SUM-767
S322601001	260.00	280.00	22.00	NBR	CS-2907
S322801001	280.00	305.00	31.00	NBR/FABRIC	SUM-678
S324101001	410.00	435.00	35.00	NBR/FABRIC	CS-2752
S324501001	450.00	480.00	45.00	NBR	CS-2949

Bold sizes are readily available in stock.
Other materials are available on request.

S46

Single Acting Rod Seal

DETAILS

S46 single acting symmetrical seal used in rod applications. It comprises of a rubberized fabric which is bonded to a nitrile energizer and back-up ring in thermoplastic elastomer.

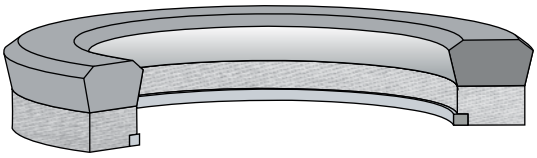

COMPATIBILITY

Mineral oils, hydraulic oils, water and air

MATERIAL

Sealing ring : Nitrile Rubber / fabric 75/80 Shore A
Back-up ring : POM / Nylon

APPLICATION

- Medium to heavy duty hydraulic cylinders.
- Valves spindles.
- Can also be used as a rod seal.

OPERATING CONDITIONS

Temperature Range : -20°C to + 100°C
Pressure : 400 Bar
Speed : 0.5 m/s

FEATURES

- Small Section.
- Easy to assemble.
- Well proven design.

SURFACE ROUGHNESS

Static : 0.8 µmRa
Dynamic : 0.4 µmRa

PERMISSIBLE EXTRUSION GAP	E max (mm)
250 Bar	0.50
400 Bar	0.40

S46

Single Acting Rod Seal

MAX SPARE LIMITED
QUALITY. PRECISION. SPEED.

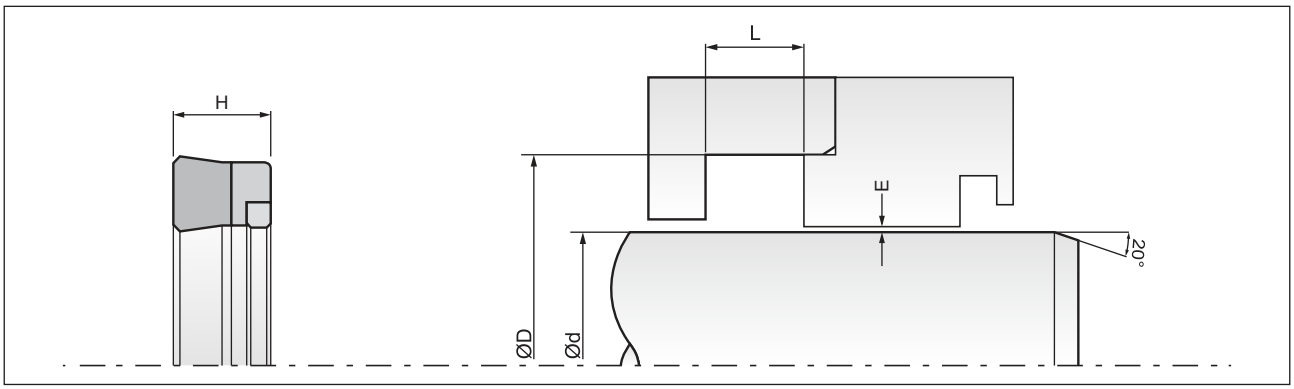

Part No.	d (h11)	D (H11)	H	L (+0.2)	Material	Mould No.
S460128306	12.00	19.00	5.80	6.30	NBR/FABRIC	PRV-741
S460128301	12.00	22.00	7.00	7.50	NBR/FABRIC	PRV-480
S460128304	12.00	23.00	6.90	7.40	NBR/FABRIC	PRV-573
S460128308	12.00	24.00	5.00	5.50	NBR/FABRIC	PRV-892
S460128307	12.70	20.63	6.30	6.80	NBR/FABRIC	PRV-742
S460128302	12.70	22.22	7.65	8.65	NBR/FABRIC	PRV-481
S460128305	12.70	25.40	9.52	10.52	NBR/FABRIC	PRV-572
S460148302	14.00	22.00	5.90	6.40	NBR/FABRIC	PRV-754
S460148303	14.00	22.00	7.30	7.80	NBR/FABRIC	PRV-755
S46148301	14.28	23.81	7.00	7.50	NBR/FABRIC	PRV-544
S460158303	15.00	22.00	5.00	5.50	NBR/FABRIC	PRV-606
S460158301	15.00	23.00	5.80	6.30	NBR/FABRIC	PRV-552
S460158304	15.00	24.00	6.30	6.80	NBR/FABRIC	PRV-607
S460158305	15.00	25.00	5.50	6.00	NBR/FABRIC	PRV-608
S460158307	15.00	27.00	6.30	6.80	NBR/FABRIC	PRV-816
S460158306	15.87	25.40	7.00	7.50	NBR/FABRIC	PRV-609
S460168301	16.00	26.00	6.30	6.80	NBR/FABRIC	PRV-1188
S460188301	18.00	25.00	6.50	6.00	NBR/FABRIC	PRV-772
S460188306	18.00	25.00	6.50	6.00	NBR/FABRIC	PRV-476
S460188302	18.00	26.00	5.50	6.00	NBR/FABRIC	PRV-610
S460186701	18.00	26.00	5.70	6.20	FKM/FABRIC	PRV-645
S460188304	18.00	28.00	6.50	6.00	NBR/FABRIC	PRV-482
S460188305	18.00	28.00	7.30	7.80	NBR/FABRIC	PRV-787
S460198303	19.00	27.00	4.00	4.50	NBR/FABRIC	PRV-891
S460198301	19.05	28.57	6.35	6.80	NBR/FABRIC	PRV-483
S460198302	19.05	28.57	9.52	10.52	NBR/FABRIC	PRV-679
S460198304	19.05	28.58	8.00	9.00	NBR/FABRIC	PRV-757
S460198305	19.05	31.75	7.70	8.70	NBR/FABRIC	PRV-758
S460208312	20.00	27.00	6.00	6.50	NBR/FABRIC	PRV-677
S460208316	20.00	28.00	5.70	6.20	NBR/FABRIC	PRV-756
S460208317	20.00	28.00	5.80	6.30	NBR/FABRIC	PRV-776
S460208302	20.00	28.00	6.40	6.90	NBR/FABRIC	PRV-1092
S460208325	20.00	28.00	6.40	6.90	NBR/FABRIC	PRV-1206
S460208309	20.00	30.00	6.00	6.50	NBR/FABRIC	PRV-611
S460208310	20.00	30.00	7.00	7.50	NBR/FABRIC	PRV-612
S460208313	20.00	30.00	7.60	8.60	NBR/FABRIC	PRV-684
S460208308	20.00	30.00	7.70	8.70	NBR/FABRIC	PRV-598
S460208315	20.00	30.00	8.80	9.80	NBR/FABRIC	PRV-743
S460208319	20.00	32.00	8.00	9.00	NBR/FABRIC	PRV-1041
S460208318	20.00	32.00	9.00	10.00	NBR/FABRIC	PRV-894
S460208321	20.00	35.00	12.00	13.00	NBR/FABRIC	PRV-1156
S460208311	20.00	36.00	10.00	11.00	NBR/FABRIC	PRV-613
S460208314	20.63	33.33	9.20	10.20	NBR/FABRIC	PRV-759
S460228315	22.00	30.00	4.50	5.00	NBR/FABRIC	PRV-788
S460228316	22.00	30.00	5.30	5.80	NBR/FABRIC	PRV-789
S460228312	22.00	30.00	5.90	6.40	NBR/FABRIC	PRV-680
S460228311	22.00	30.00	6.00	6.50	NBR/FABRIC	PRV-681
S460228313	22.00	30.00	6.50	6.00	NBR/FABRIC	PRV-682
S460228314	22.00	32.00	5.40	5.90	NBR/FABRIC	PRV-744
S460228319	22.00	32.00	6.00	6.50	NBR/FABRIC	PRV-1158
S460228317	22.00	32.00	7.00	7.50	NBR/FABRIC	PRV-895
S460228318	22.00	32.00	8.00	9.00	NBR/FABRIC	PRV-896

Part No.	d (h11)	D (H11)	H	L (+0.2)	Material	Mould No.
S460228303	22.00	34.00	9.50	10.50	NBR/FABRIC	PRV-197
S460228303	22.00	34.00	9.50	10.50	NBR/FABRIC	PRV-1114
S460228301	22.00	35.00	10.00	11.00	NBR/FABRIC	PRV-484
S460228304	22.22	31.75	9.20	10.20	NBR/FABRIC	PRV-196
S460238301	23.81	36.51	9.20	10.20	NBR/FABRIC	PRV-571
S460248303	24.00	32.00	5.50	6.00	NBR/FABRIC	PRV-893
S460248301	24.00	32.00	6.90	7.40	NBR/FABRIC	PRV-570
S460248304	24.00	34.00	5.70	6.20	NBR/FABRIC	PRV-1148
S460248302	24.00	34.00	6.00	6.50	NBR/FABRIC	PRV-614
S460258301	25.00	33.00	5.80	6.30	NBR/FABRIC	PRV-771
S460258502	25.00	33.00	5.80	6.30	FKM/FABRIC	PRV-1037
S460258324	25.00	33.00	6.00	6.50	NBR/FABRIC	PRV-727
S460258315	25.00	33.00	6.30	6.80	NBR/FABRIC	PRV-451
S460258325	25.00	33.00	6.40	6.90	NBR/FABRIC	PRV-1186
S460258316	25.00	35.00	8.00	9.00	NBR/FABRIC	SRV-1114
S460258323	25.00	35.00	8.00	9.00	NBR/FABRIC	PRV-1163
S460258321	25.00	38.00	7.50	8.00	NBR/FABRIC	PRV-1042
S460258320	25.00	38.00	8.00	9.00	NBR/FABRIC	PRV-897
S460258318	25.00	38.00	9.15	10.15	NBR/FABRIC	PRV-760
S460258322	25.00	38.00	10.00	11.00	NBR/FABRIC	PRV-1052
S460258501	25.00	38.00	10.00	11.00	FKM/FABRIC	PRV-274
S460258314	25.00	44.00	11.40	12.40	NBR/FABRIC	PRV-569
S460258319	25.40	38.10	8.52	9.52	NBR/FABRIC	PRV-795
S460258302	25.40	38.10	9.60	10.60	NBR/FABRIC	PRV-148
S460278301	27.00	35.00	6.24	6.70	NBR/FABRIC	PRV-204
S460288314	28.00	36.00	5.50	6.00	NBR/FABRIC	PRV-898
S460288309	28.00	36.00	6.00	6.50	NBR/FABRIC	PRV-615
S460288310	28.00	38.00	5.80	6.30	NBR/FABRIC	PRV-761
S460288301	28.00	38.00	7.40	7.90	NBR/FABRIC	PRV-114
S460288502	28.00	38.00	7.40	7.90	FKM/FABRIC	PRV-1157
S460288501	28.00	38.00	7.50	8.00	NBR/FABRIC	PRV-1104
S460288313	28.00	40.00	9.00	10.00	NBR/FABRIC	PRV-899
S460288311	28.57	39.68	8.50	9.50	NBR/FABRIC	PRV-762
S460288308	28.57	41.27	9.20	10.20	NBR/FABRIC	PRV-543
S460288312	28.58	44.45	9.50	10.50	NBR/FABRIC	PRV-903
S460308324	30.00	37.00	5.00	5.50	NBR/FABRIC	PRV-879
S460308332	30.00	37.00	6.00	6.50	NBR/FABRIC	PRV-1003
S460308309	30.00	37.00	6.50	6.00	NBR/FABRIC	PRV-683
S460308325	30.00	37.00	7.00	7.50	NBR/FABRIC	PRV-880
S460308333	30.00	37.00	8.00	9.00	NBR/FABRIC	PRV-1002
S460308326	30.00	37.00	9.00	10.00	NBR/FABRIC	PRV-881
S460308334	30.00	37.00	10.00	11.00	NBR/FABRIC	PRV-1001
S460308321	30.00	38.00	5.00	5.50	NBR/FABRIC	PRV-882
S460308336	30.00	38.00	5.50	6.00	NBR/FABRIC	PRV-1264
S460308301	30.00	38.00	5.80	6.30	NBR/FABRIC	PRV-149
S460308329	30.00	38.00	6.00	6.50	NBR/FABRIC	PRV-1006
S460308322	30.00	38.00	7.00	7.50	NBR/FABRIC	PRV-883
S460308330	30.00	38.00	8.00	9.00	NBR/FABRIC	PRV-1005
S460308335	30.00	38.00	8.00	9.00	NBR/FABRIC	PRV-1189
S460308323	30.00	38.00	9.00	10.00	NBR/FABRIC	PRV-884
S460308331	30.00	38.00	10.00	11.00	NBR/FABRIC	PRV-1004
S460308319	30.00	40.00	5.00	5.50	NBR/FABRIC	PRV-863

Bold sizes are readily available in stock.
Other materials are available on request.

S46

Single Acting Rod Seal

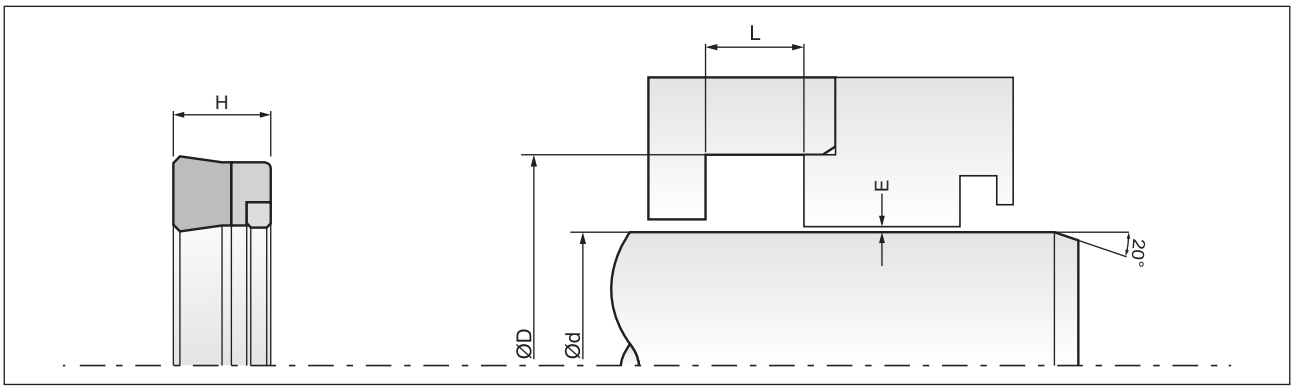

Part No.	d (h11)	D (H11)	H	L (+0.2)	Material	Mould No.
S460308327	30.00	40.00	6.00	6.50	NBR/FABRIC	PRV-1008
S460308310	30.00	40.00	6.80	7.30	NBR/FABRIC	PRV-685
S460300312	30.00	40.00	7.00	7.50	NBR/FABRIC	SRV-1124
S460308314	30.00	40.00	7.00	7.50	NBR/FABRIC	PRV-734
S460308320	30.00	40.00	7.00	7.50	NBR/FABRIC	PRV-864
S460308328	30.00	40.00	8.00	9.00	NBR/FABRIC	PRV-1007
S460308306	30.00	40.00	9.80	10.80	NBR/FABRIC	PRV-1179
S460308316	30.00	40.00	10.00	11.00	NBR/FABRIC	PRV-794
S460308501	30.00	40.00	10.00	11.00	FKM/FABRIC	PRV-1106
S460308313	30.00	40.00	10.20	11.20	NBR	PRV-729
S460308317	30.00	40.00	10.50	11.50	NBR/FABRIC	PRV-837
S460308318	30.00	42.00	10.00	11.00	NBR/FABRIC	PRV-862
S460308308	30.00	42.67	9.52	10.52	NBR/FABRIC	PRV-529
S460308304	30.00	45.00	9.00	10.00	NBR/FABRIC	PRV-194
S460308315	30.00	45.00	9.00	10.00	NBR/FABRIC	PRV-777
S460308311	30.00	45.00	10.00	11.00	NBR/FABRIC	PRV-686
S460318306	31.75	38.10	6.00	6.50	NBR/FABRIC	PRV-568
S460318314	31.75	38.10	6.35	6.80	NBR/FABRIC	PRV-1268
S460318310	31.75	41.27	6.95	7.50	NBR/FABRIC	PRV-900
S460318313	31.75	41.28	9.52	10.52	ACM	PRV-1222
S460318311	31.75	44.45	7.93	8.93	NBR/FABRIC	PRV-1184
S460318309	31.75	44.45	8.10	9.10	NBR/FABRIC	PRV-902
S460318307	31.75	44.45	8.70	9.70	NBR/FABRIC	PRV-764
S460318305	31.75	47.62	10.00	11.00	NBR/FABRIC	PRV-485
S460328321	32.00	40.00	5.50	6.00	NBR/FABRIC	PRV-1249
S460328311	32.00	40.00	6.00	6.50	NBR/FABRIC	PRV-599
S460328318	32.00	40.00	6.50	6.00	NBR/FABRIC	PRV-1174
S460328305	32.00	40.00	8.00	9.00	NBR/FABRIC	PRV-280
S4603208313	32.00	40.00	8.50	9.50	NBR/FABRIC	SRV-1122
S460328312	32.00	40.00	8.50	9.50	NBR/FABRIC	PRV-687
S460328316	32.00	42.00	7.00	7.50	NBR/FABRIC	PRV-901
S460328314	32.00	42.00	7.80	8.80	NBR/FABRIC	PRV-763
S460328315	32.00	42.00	8.00	9.00	NBR/FABRIC	PRV-835
S460328320	32.00	42.00	8.50	9.50	ACM	PRV-1223
S460328317	32.00	45.00	10.00	11.00	NBR/FABRIC	PRV-1030
S460328310	32.00	47.00	10.00	11.00	NBR/FABRIC	PRV-486
S460348303	34.92	44.45	6.93	7.50	NBR/FABRIC	PRV-791
S460358317	35.00	43.00	5.40	5.90	NBR/FABRIC	PRV-952
S460358303	35.00	43.00	6.00	6.50	NBR/FABRIC	PRV-833
S460358303	35.00	43.00	6.00	6.50	NBR/FABRIC	PRV-186
S460358315	35.00	43.00	6.00	6.50	NBR/FABRIC	PRV-834
S460358316	35.00	43.00	6.50	6.00	NBR/FABRIC	PRV-953
S460358308	35.00	45.00	6.00	6.50	NBR/FABRIC	PRV-689
S460358314	35.00	45.00	6.50	6.00	NBR/FABRIC	PRV-792
S460358309	35.00	45.00	7.00	7.50	NBR/FABRIC	PRV-690
S460358307	35.00	45.00	7.20	7.70	NBR/FABRIC	PRV-542
S460358301	35.00	45.00	7.50	8.00	NBR/FABRIC	PRV-1093
S460358319	35.00	45.00	8.00	9.00	NBR/FABRIC	PRV-1009
S460358302	35.00	45.00	9.80	10.80	NBR/FABRIC	PRV-151
S460358312	35.00	45.00	10.00	11.00	NBR/FABRIC	PRV-745
S460358313	35.00	45.00	10.00	11.00	NBR/FABRIC	PRV-749
S460358310	35.00	45.00	10.20	11.20	NBR/FABRIC	PRV-730

Part No.	d (h11)	D (H11)	H	L (+0.2)	Material	Mould No.
S460358306	35.00	50.00	10.00	11.00	NBR/FABRIC	PRV-487
S460358305	35.00	50.00	11.50	12.50	NBR/FABRIC	PRV-108
S460358322	35.00	51.00	10.00	11.00	NBR/FABRIC	PRV-1055
S460358326	35.00	55.00	10.00	11.00	NBR/FABRIC	PRV-1270
S460368307	36.00	43.00	6.00	6.50	NBR/FABRIC	PRV-688
S460368310	36.00	44.00	5.00	5.50	NBR/FABRIC	PRV-885
S460368305	36.00	44.00	5.90	6.40	NBR/FABRIC	PRV-566
S460368311	36.00	44.00	6.00	6.50	NBR/FABRIC	PRV-1010
S460368306	36.00	45.00	6.50	6.00	NBR/FABRIC	PRV-565
S460368308	36.00	46.00	8.00	9.00	NBR/FABRIC	PRV-726
S460368314	36.00	46.00	8.00	9.00	NBR/FABRIC	PRV-1054
S460368303	36.00	48.00	8.70	9.70	NBR/FABRIC	PRV-363
S460368315	36.00	48.00	9.00	10.00	NBR/FABRIC	PRV-1109
S460368316	36.00	50.00	11.00	12.00	NBR/FABRIC	PRV-1112
S460368309	36.00	54.00	9.00	10.00	NBR/FABRIC	PRV-793
S460388314	38.00	48.00	7.00	7.50	NBR/FABRIC	PRV-906
S460388315	38.00	48.00	8.00	9.00	NBR/FABRIC	PRV-1187
S460388311	38.10	47.62	5.70	6.20	NBR/FABRIC	PRV-765
S460388313	38.10	47.62	6.50	6.00	NBR/FABRIC	PRV-904
S460388310	38.10	47.62	9.50	10.50	NBR/FABRIC	PRV-547
S460388312	38.10	53.97	9.50	10.50	NBR/FABRIC	PRV-766
S460388309	38.10	53.97	12.70	13.70	NBR/FABRIC	PRV-488
S460408335	40.00	48.00	5.40	5.90	NBR/FABRIC	PRV-905
S460408307	40.00	48.00	6.00	6.50	NBR/FABRIC	PRV-285
S460408330	40.00	48.00	6.00	6.50	NBR/FABRIC	PRV-781
S460408334	40.00	50.00	5.00	5.50	NBR/FABRIC	PRV-865
S460408336	40.00	50.00	6.00	6.50	NBR/FABRIC	PRV-1011
S460408342	40.00	50.00	6.80	7.30	NBR/FABRIC	PRV-1271
S460408321	40.00	50.00	7.40	7.90	NBR/FABRIC	PRV-692
S460408328	40.00	50.00	7.50	8.00	NBR/FABRIC	PRV-750
S460408337	40.00	50.00	8.00	9.00	NBR/FABRIC	PRV-1012
S460408317	40.00	50.00	9.00	10.00	NBR/FABRIC	PRV-489
S460406602	40.00	50.00	9.22	10.20	FKM/FABRIC	PRV-1154
S460408303	40.00	50.00	9.80	10.80	NBR/FABRIC	PRV-127
S460408323	40.00	50.00	10.00	11.00	NBR/FABRIC	SRV-1159
S460408501	40.00	50.00	10.00	11.00	FKM/FABRIC	PRV-841
S460408324	40.00	50.00	10.20	11.20	NBR/FABRIC	PRV-728
S460408333	40.00	50.00	10.50	11.50	NBR/FABRIC	PRV-836
S4600408322	40.00	55.00	7.50	8.00	NBR/FABRIC	SRV-1157
S460408325	40.00	55.00	8.00	9.00	NBR/FABRIC	PRV-287
S460408326	40.00	55.00	8.40	9.40	NBR/FABRIC	PRV-746
S460408331	40.00	55.00	9.00	10.00	NBR/FABRIC	PRV-796
S460408327	40.00	55.00	9.80	10.80	NBR/FABRIC	PRV-747
S460408314	40.00	55.00	11.00	12.00	NBR/FABRIC	PRV-364
S460408332	40.00	56.00	5.00	5.50	NBR/FABRIC	PRV-797
S460408339	40.00	60.00	10.00	11.00	NBR/FABRIC	PRV-1208
S460408329	40.00	60.00	13.30	14.30	NBR/FABRIC	PRV-768
S460408318	40.00	60.00	14.50	15.50	NBR/FABRIC	PRV-490
S460418301	41.27	57.15	10.11	11.11	NBR/FABRIC	PRV-963
S460418305	41.27	57.15	11.09	11.09	NBR/FABRIC	PRV-1239
S460418304	41.45	57.15	8.52	9.52	NBR/FABRIC	PRV-574
S460428302	42.00	50.00	6.00	6.50	NBR/FABRIC	PRV-691

Bold sizes are readily available in stock.
Other materials are available on request.

S46

Single Acting Rod Seal

MAX SPARE LIMITED
QUALITY. PRECISION. SPEED.

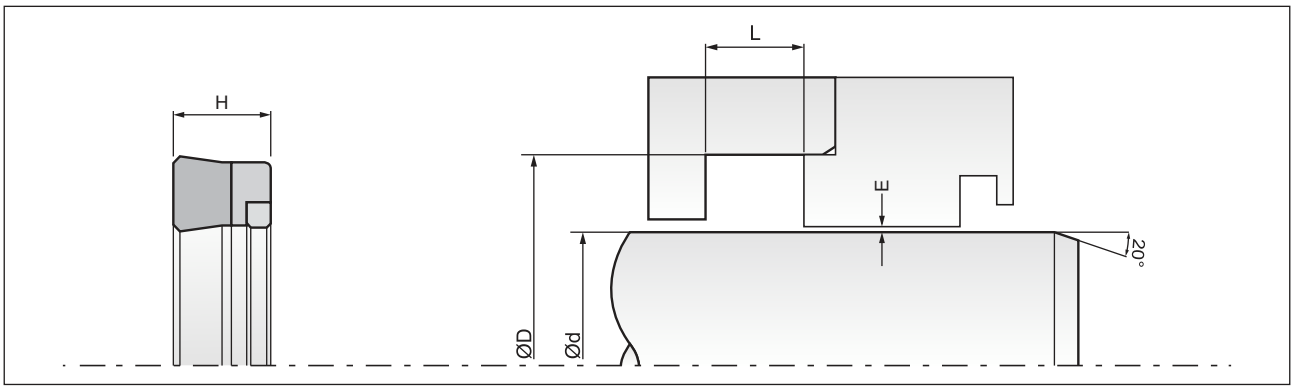

Part No.	d (h11)	D (H11)	H	L (+0.2)	Material	Mould No.
S460428303	42.00	60.00	9.20	10.20	NBR/FABRIC	PRV-748
S460428304	42.92	55.50	8.10	9.10	NBR/FABRIC	PRV-909
S460438301	43.00	53.00	8.40	9.40	NBR/FABRIC	PRV-551
S460448304	44.00	53.00	8.00	9.00	NBR/FABRIC	PRV-366
S460448307	44.00	55.00	11.00	12.00	NBR/FABRIC	PRV-575
S460448312	44.45	53.97	7.00	7.50	NBR/FABRIC	PRV-1252
S460448309	44.45	53.98	5.35	5.80	NBR/FABRIC	PRV-907
S460448310	44.45	53.98	6.92	7.40	NBR/FABRIC	PRV-908
S460448308	44.45	57.15	8.52	9.52	NBR/FABRIC	PRV-799
S460448306	44.45	57.15	8.62	9.62	NBR/FABRIC	PRV-576
S460448501	44.45	57.15	8.82	9.82	FKM/FABRIC	PRV-1228
S460448311	44.45	60.32	10.00	11.00	NBR/FABRIC	PRV-1062
S460448305	44.45	60.32	10.60	11.60	NBR/FABRIC	PRV-528
S460458324	45.00	53.00	6.00	6.50	NBR/FABRIC	PRV-767
S460458317	45.00	53.00	7.00	7.50	NBR/FABRIC	PRV-370
S460458339	45.00	53.00	7.80	8.80	NBR/FABRIC	PRV-1088
S460458322	45.00	53.00	8.00	9.00	NBR/FABRIC	PRV-621
S460458330	45.00	55.00	5.00	5.50	NBR/FABRIC	PRV-866
S460458345	45.00	55.00	6.00	6.50	NBR/FABRIC	PRV-1013
S460458318	45.00	55.00	7.00	7.50	NBR/FABRIC	PRV-527
S460458502	45.00	55.00	7.00	7.50	FKM/FABRIC	PRV-1259
S460458501	45.00	55.00	7.30	7.80	FKM/FABRIC	PRV-443
S460458303	45.00	55.00	7.50	8.00	NBR/FABRIC	PRV-1103
S460458342	45.00	55.00	7.50	8.00	NBR/FABRIC	PRV-1209
S460458334	45.00	55.00	8.00	9.00	NBR/FABRIC	PRV-1014
S460458329	45.00	55.00	9.00	10.00	NBR/FABRIC	PRV-867
S460458347	45.00	55.00	9.80	10.80	NBR+ACT-1	PRV-1258
S460458302	45.00	55.00	10.00	11.00	NBR/FABRIC	PRV-424
S460458302	45.00	55.00	10.00	11.00	NBR/FABRIC	PRV-444
S460458323	45.00	55.00	10.20	11.20	NBR/FABRIC	PRV-731
S460458301	45.00	55.00	10.50	11.50	NBR/FABRIC	PRV-1051
S460458335	45.00	56.00	10.00	11.00	NBR/FABRIC	PRV-1056
S460458338	45.00	57.00	7.50	8.00	NBR/FABRIC	PRV-1057
S460458321	45.00	57.00	8.40	9.40	NBR/FABRIC	PRV-600
S460458326	45.00	57.00	9.00	10.00	NBR/FABRIC	PRV-817
S460458336	45.00	57.00	10.00	11.00	NBR/FABRIC	PRV-1058
S460458304	45.00	60.00	9.60	10.60	NBR/FABRIC	PRV-294
S460458337	45.00	60.00	10.00	11.00	NBR/FABRIC	PRV-1060
S460458341	45.00	60.00	10.00	11.00	NBR/FABRIC	PRV-1168
S460458343	45.00	60.00	10.00	11.00	NBR/FABRIC	SRV-1249
S460458340	45.00	60.00	10.50	11.50	NBR/FABRIC	PRV-1161
S460458328	45.00	60.00	11.00	12.00	NBR/FABRIC	PRV-868
S460458332	45.00	60.00	12.00	13.00	NBR/FABRIC	PRV-1000
S460458316	45.00	63.00	10.00	11.00	NBR/FABRIC	PRV-491
S460458319	45.00	65.00	12.00	13.00	NBR	PRV-526
S460458331	45.00	70.00	9.50	10.50	NBR/FABRIC	PRV-910
S460468301	46.00	56.00	7.30	7.80	NBR/FABRIC	PRV-620
S460478302	47.00	57.00	9.00	10.00	NBR/FABRIC	PRV-431
S460478304	47.00	57.00	10.00	11.00	NBR/FABRIC	PRV-1059
S460478303	47.23	60.32	9.20	10.20	NBR/FABRIC	PRV-622
S460488301	48.00	60.00	6.30	6.80	NBR/FABRIC	PRV-618
S460508316	50.00	58.00	12.00	13.00	NBR/FABRIC	PRV-619

Part No.	d (h11)	D (H11)	H	L (+0.2)	Material	Mould No.
S460508330	50.00	60.00	5.00	5.50	NBR/FABRIC	PRV-869
S460508333	50.00	60.00	6.00	6.50	NBR/FABRIC	PRV-1015
S460508324	50.00	60.00	6.30	6.80	NBR/FABRIC	PRV-919
S460508350	50.00	60.00	7.30	7.80	NBR/FABRIC	PRV-1240
S460508327	50.00	60.00	7.50	8.00	NBR/FABRIC	PRV-815
S460508334	50.00	60.00	8.00	9.00	NBR/FABRIC	PRV-995
S460508325	50.00	60.00	9.30	10.30	NBR/FABRIC	PRV-769
S460508326	50.00	60.00	9.60	10.60	NBR/FABRIC	PRV-790
S4605083323	50.00	60.00	10.00	11.00	NBR/FABRIC	PRV-736
S460508336	50.00	60.00	10.00	11.00	NBR/FABRIC	PRV-1061
S460508340	50.00	60.00	10.00	11.00	NBR/FABRIC	PRV-1207
S460508501	50.00	60.00	10.00	11.00	FKM/FABRIC	PRV-840
S460508321	50.00	60.00	11.00	12.00	NBR/FABRIC	PRV-678
S460508317	50.00	63.00	10.00	11.00	NBR/FABRIC	PRV-616
S460508339	50.00	63.00	11.00	12.00	NBR/FABRIC	PRV-1134
S460508318	50.00	63.00	12.00	13.00	NBR/FABRIC	PRV-617
S460508314	50.00	65.00	10.00	11.00	NBR/FABRIC	SRV-1962
S460508315	50.00	65.00	10.50	11.50	NBR/FABRIC	PRV-492
S460508328	50.00	65.00	10.50	11.50	NBR/FABRIC	SRV-1248
S460508329	50.00	65.00	11.00	12.00	NBR/FABRIC	PRV-950
S460508319	50.00	65.00	12.00	13.00	NBR/FABRIC	PRV-628
S460508341	50.00	70.00	13.20	14.20	NBR/FABRIC	PRV-1229
S460508502	50.00	70.00	13.50	14.50	FKM/FABRIC	PRV-1173
S460508338	50.00	75.00	9.50	10.50	NBR/FABRIC	PRV-1064
S460508320	50.70	60.70	7.00	7.50	NBR/FABRIC	PRV-646
S460508351	50.80	63.50	7.93	8.93	NBR+ACT-1	PRV-1247
S460538301	53.00	63.00	6.50	6.00	NBR/FABRIC	PRV-697
S460548302	54.00	66.00	8.70	9.70	NBR/FABRIC	PRV-911
S460558318	55.00	63.20	11.00	12.00	NBR/FABRIC	PRV-1089
S460558313	55.00	65.00	5.00	5.50	NBR/FABRIC	PRV-870
S460558316	55.00	65.00	6.00	6.50	NBR/FABRIC	PRV-1017
S460558314	55.00	65.00	6.30	6.80	NBR/FABRIC	PRV-920
S460558307	55.00	65.00	7.50	8.00	NBR/FABRIC	PRV-106
S46055831	55.00	65.00	7.50	8.00	NBR/FABRIC	PRV-1220
S460558310	55.00	65.00	7.50	8.00	NBR/FABRIC	PRV-698
S460558317	55.00	65.00	8.00	9.00	NBR/FABRIC	PRV-1016
S460558306	55.00	65.00	9.00	10.00	NBR/FABRIC	PRV-546
S460558311	55.00	65.00	9.50	10.50	NBR/FABRIC	PRV-798
S460558320	55.00	65.00	10.00	11.00	NBR/FABRIC	PRV-1231
S460558315	55.00	67.00	9.00	10.00	NBR/FABRIC	PRV-951
S460558312	55.00	70.00	11.00	12.00	NBR/FABRIC	PRV-800
S460558309	55.00	72.00	10.00	11.00	NBR/FABRIC	PRV-627
S460558308	55.00	75.00	12.00	13.00	NBR/FABRIC	PRV-577
S460568308	56.00	66.00	6.30	6.80	NBR/FABRIC	PRV-724
S460568310	56.00	66.00	7.00	7.50	NBR/FABRIC	PRV-1177
S460568307	56.00	66.00	7.30	7.80	NBR/FABRIC	PRV-694
S460568302	56.00	70.00	9.50	10.50	NBR/FABRIC	SRV-1579
S460568501	56.00	71.00	9.50	10.50	FKM/FABRIC	SRV-1524
S460568309	56.00	71.00	10.50	11.50	NBR/FABRIC	PRV-534
S460568306	56.00	76.00	13.40	14.40	NBR/FABRIC	PRV-578
S460578304	57.00	67.00	8.00	9.00	NBR/FABRIC	PRV-349
S460578307	57.15	69.85	9.20	10.20	NBR/FABRIC	PRV-550

Bold sizes are readily available in stock.
Other materials are available on request.

S46

Single Acting Rod Seal

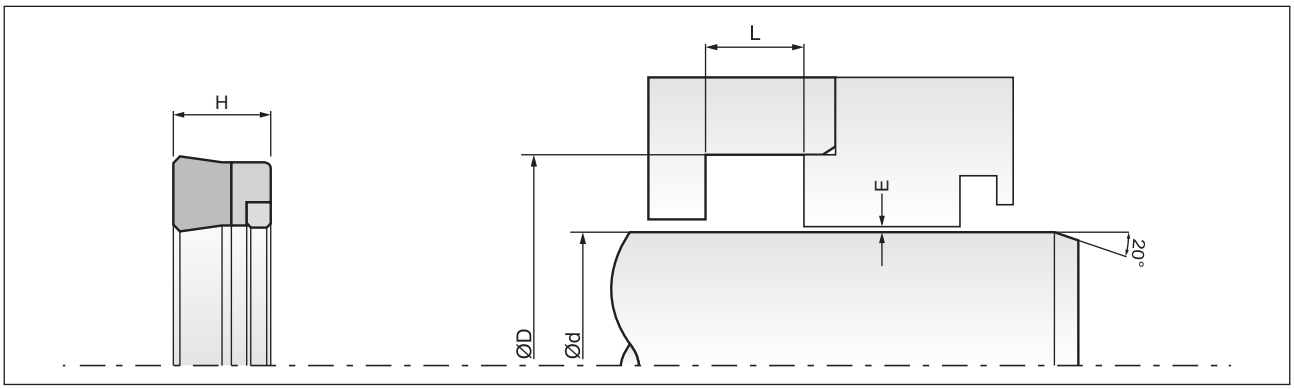

Part No.	d (h11)	D (H11)	H	L (+0.2)	Material	Mould No.
S460578308	57.15	76.20	10.50	11.50	NBR/FABRIC	PRV-695
S460578311	57.15	76.20	12.70	13.70	NBR/FABRIC	PRV-1126
S460578309	57.15	76.20	13.00	14.00	NBR/FABRIC	PRV-696
S460578306	57.50	73.00	11.50	12.50	NBR/FABRIC	PRV-493
S460608326	60.00	69.50	6.40	6.90	NBR/FABRIC	PRV-818
S460608327	60.00	70.00	5.00	5.50	NBR/FABRIC	PRV-871
S460608330	60.00	70.00	6.00	6.50	NBR/FABRIC	PRV-1018
S460608336	60.00	70.00	9.00	10.00	NBR/FABRIC	PRV-1250
S460608328	60.00	70.00	9.20	10.20	NBR/FABRIC	PRV-921
S460608303	60.00	70.00	10.30	11.30	NBR/FABRIC	PRV-143
S460608324	60.00	70.00	10.50	11.50	NBR/FABRIC	PRV-732
S460606602	60.00	72.00	9.00	10.00	FKM/FABRIC	PRV-1153
S460608319	60.00	75.00	10.00	11.00	NBR/FABRIC	PRV-300
S460608332	60.00	75.00	11.50	12.50	NBR/FABRIC	PRV-1147
S460608320	60.00	75.00	12.00	13.00	NBR/FABRIC	PRV-390
S460608325	60.00	75.00	12.50	13.50	NBR/FABRIC	PRV-774
S460608321	60.00	80.00	10.00	11.00	NBR/FABRIC	PRV-373
S460608309	60.00	80.00	12.00	13.00	NBR/FABRIC	PRV-350
S460608322	60.00	80.00	12.50	13.50	NBR/FABRIC	PRV-701
S460608323	60.00	80.00	13.50	14.50	NBR/FABRIC	SRV-1142
S460608501	60.00	80.00	13.50	14.50	FKM/FABRIC	PRV-725
S460608317	60.00	85.00	12.00	13.00	NBR/FABRIC	PRV-579
S460608318	60.00	85.00	14.50	15.50	NBR/FABRIC	PRV-580
S460618301	61.00	69.00	8.50	9.50	NBR/FABRIC	PRV-494
S460638318	63.00	73.00	7.50	8.00	NBR/FABRIC	PRV-1063
S460638325	63.00	75.00	8.70	9.70	NBR/FABRIC	PRV-1219
S460638312	63.00	75.00	8.80	9.80	NBR/FABRIC	PRV-545
S460638301	63.00	75.00	9.30	10.30	NBR/FABRIC	PRV-1190
S460638307	63.00	75.00	10.00	11.00	NBR/FABRIC	PRV-530
S460638315	63.00	75.00	10.00	11.00	NBR/FABRIC	PRV-735
S460638317	63.00	78.00	9.00	10.00	NBR/FABRIC	PRV-923
S460638330	63.00	78.00	9.30	10.30	NBR	PRV-1257
S460638313	63.00	83.00	13.30	14.30	NBR/FABRIC	PRV-626
S460638331	63.50	76.20	7.20	7.70	NBR/FABRIC	PRV-1262
S460638321	63.50	76.20	7.70	8.70	NBR/FABRIC	PRV-1145
S460638320	63.50	76.20	8.16	9.16	NBR/FABRIC	PRV-1133
S460638322	63.50	76.20	8.50	9.50	NBR/FABRIC	PRV-1166
S460638319	63.50	76.20	9.00	10.00	NBR/FABRIC	PRV-1065
S460638314	63.50	76.20	12.70	13.70	NBR/FABRIC	PRV-625
S460638302	63.50	77.78	10.70	11.70	NBR/FABRIC	PRV-139
S460638323	63.50	77.78	11.50	12.50	NBR/FABRIC	PRV-1164
S460638311	63.50	82.50	14.50	15.50	NBR/FABRIC	PRV-495
S460658316	65.00	75.00	5.00	5.50	NBR/FABRIC	PRV-872
S460658315	65.00	75.00	6.00	6.50	NBR/FABRIC	PRV-843
S460658320	65.00	75.00	7.00	7.50	NBR/FABRIC	PRV-1035
S460658309	65.00	75.00	8.00	9.00	NBR/FABRIC	PRV-624
S460658323	65.00	75.00	8.00	9.00	NBR/FABRIC	PRV-1181
S460658313	65.00	75.00	9.00	10.00	NBR/FABRIC	PRV-832
S460658324	65.00	75.00	10.00	11.00	NBR/FABRIC	PRV-1180
S460658307	65.00	75.00	12.00	13.00	NBR/FABRIC	PRV-496
S460658322	65.00	75.00	13.00	14.00	NBR/FABRIC	PRV-733
S460658317	65.00	77.00	8.00	9.00	NBR/FABRIC	PRV-922

Part No.	d (h11)	D (H11)	H	L (+0.2)	Material	Mould No.
S460658308	65.00	77.00	8.80	9.80	NBR/FABRIC	PRV-581
S460658310	65.00	77.00	9.00	10.00	NBR/FABRIC	PRV-700
S460658318	65.00	78.00	11.00	12.00	NBR/FABRIC	PRV-970
S460658306	65.00	80.00	9.00	10.00	NBR/FABRIC	PRV-961
S460658304	65.00	80.00	10.00	11.00	NBR/FABRIC	PRV-303
S460658305	65.00	80.00	10.00	11.00	NBR/FABRIC	PRV-1039
S460658303	65.00	80.00	10.60	11.60	NBR/FABRIC	PRV-304
S460658321	65.00	80.00	11.50	12.50	NBR/FABRIC	PRV-1178
S460658311	65.00	85.00	12.00	13.00	NBR/FABRIC	PRV-393
S460358321	68.00	76.00	5.50	6.00	NBR/FABRIC	PRV-1053
S460688301	68.00	80.00	9.20	10.20	NBR/FABRIC	PRV-924
S460698303	69.85	82.55	9.52	10.52	NBR/FABRIC	PRV-1183
S460698302	69.85	85.55	8.52	9.52	NBR/FABRIC	PRV-829
S460698301	69.85	85.60	9.52	10.52	NBR/FABRIC	PRV-623
S460708337	70.00	78.20	11.00	12.00	NBR/FABRIC	PRV-1099
S460708331	70.00	80.00	5.00	5.50	NBR/FABRIC	PRV-873
S460708334	70.00	80.00	6.00	6.50	NBR/FABRIC	PRV-994
S460708305	70.00	80.00	7.00	7.50	NBR/FABRIC	PRV-965
S460708326	70.00	80.00	7.30	7.80	NBR/FABRIC	PRV-819
S460708341	70.00	80.00	8.00	9.00	NBR/FABRIC	PRV-1210
S460708329	70.00	80.00	9.50	10.50	NBR/FABRIC	PRV-826
S460708343	70.00	80.00	10.00	11.00	NBR/FABRIC	PRV-1267
S460708503	70.00	80.00	12.30	13.30	FKM/FABRIC	PRV-720
S460708306	70.00	80.00	12.50	13.50	NBR/FABRIC	PRV-307
S460708328	70.00	82.00	8.00	9.00	NBR/FABRIC	PRV-827
S460708327	70.00	82.00	8.60	9.60	NBR/FABRIC	PRV-828
S460708324	70.00	82.00	9.70	10.70	NBR/FABRIC	PRV-820
S460708332	70.00	83.00	11.00	12.00	NBR/FABRIC	PRV-971
S460708307	70.00	83.00	12.00	13.00	NBR/FABRIC	PRV-1084
S460708336	70.00	83.50	10.00	11.00	NBR/FABRIC	PRV-1066
S460708325	70.00	84.00	11.20	12.20	NBR/FABRIC	PRV-821
S460708339	70.00	84.00	12.50	13.50	NBR/FABRIC	PRV-1165
S460708322	70.00	85.00	8.00	9.00	NBR/FABRIC	PRV-634
S460708320	70.00	85.00	9.00	10.00	NBR/FABRIC	PRV-582
S460708301	70.00	85.00	10.00	11.00	NBR/FABRIC	PRV-962
S460708309	70.00	85.00	10.00	11.00	NBR/FABRIC	PRV-310
S460708317	70.00	85.00	11.00	12.00	NBR/FABRIC	PRV-463
S460708504	70.00	85.00	11.00	12.00	FKM/FABRIC	PRV-1083
S460708302	70.00	85.00	11.50	12.50	NBR/FABRIC	PRV-1131
S460708502	70.00	85.00	11.50	12.50	FKM/FABRIC	PRV-538
S460708505	70.00	85.00	11.52	12.52	FKM	PRV-1152
S460708323	70.00	85.00	12.00	13.00	NBR/FABRIC	PRV-778
S460708314	70.00	85.00	12.50	13.50	NBR/FABRIC	PRV-1171
S460708315	70.00	85.00	13.50	14.50	NBR/FABRIC	PRV-395
S460708321	70.00	90.00	10.50	11.50	NBR/FABRIC	PRV-605
S460708342	70.00	90.00	13.20	14.20	NBR/FABRIC	PRV-1230
S460738301	73.03	88.90	12.29	13.30	NBR/FABRIC	PRV-523
S460758317	75.00	85.00	5.00	5.50	NBR/FABRIC	PRV-886
S460758323	75.00	85.00	6.00	6.50	NBR/FABRIC	PRV-999
S460758308	75.00	85.00	7.30	7.80	NBR/FABRIC	PRV-497
S460758318	75.00	85.00	9.20	10.20	NBR/FABRIC	PRV-925
S460758327	75.00	85.00	10.00	11.00	NBR/FABRIC	PRV-1067

Bold sizes are readily available in stock.
Other materials are available on request.

S46

Single Acting Rod Seal

MAX SPARE LIMITED
QUALITY. PRECISION. SPEED.

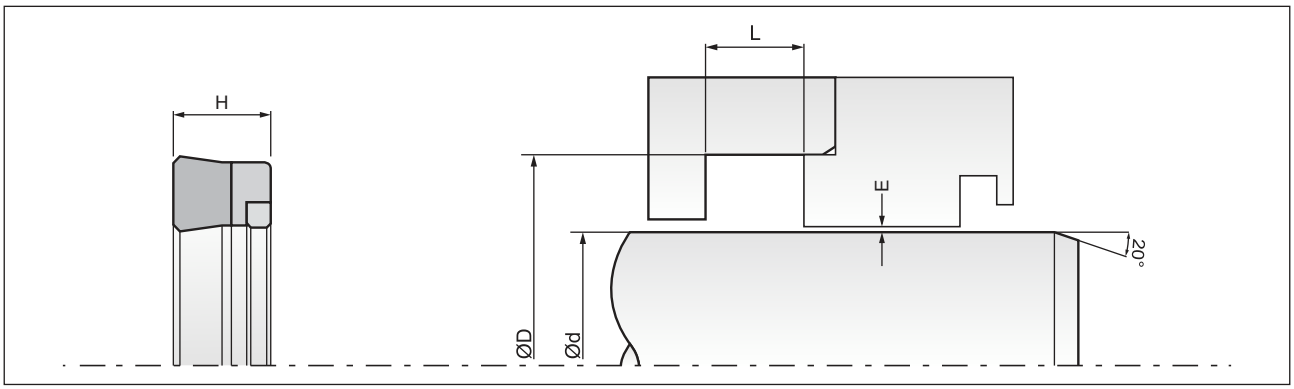

Part No.	d (h11)	D (H11)	H	L (+0.2)	Material	Mould No.
S460751101	75.00	85.00	10.40	11.40	NBR/FABRIC	PRV-1128
S460758319	75.00	85.00	11.00	12.00	NBR/FABRIC	PRV-926
S460758328	75.00	85.00	12.00	13.00	NBR/FABRIC	PRV-1070
S460758324	75.00	88.00	10.00	11.00	NBR/FABRIC	PRV-1023
S460758320	75.00	88.00	11.00	12.00	NBR/FABRIC	PRV-972
S460758304	75.00	88.00	12.00	13.00	NBR/FABRIC	PRV-1085
S460758325	75.00	88.00	12.00	13.00	NBR/FABRIC	PRV-1024
S460758330	75.00	90.00	5.50	6.00	NBR/FABRIC	PRV-1151
S460758315	75.00	90.00	9.00	10.00	NBR/FABRIC	PRV-844
S460758311	75.00	90.00	10.00	11.00	NBR/FABRIC	PRV-707
S460758326	75.00	90.00	10.00	11.00	NBR/FABRIC	PRV-1036
S460758312	75.00	90.00	10.50	11.50	NBR/FABRIC	PRV-708
S460758316	75.00	90.00	11.00	12.00	NBR/FABRIC	PRV-874
S460758501	75.00	90.00	11.50	12.50	NBR/FABRIC	PRV-208
S460758321	75.00	90.00	12.00	13.00	NBR/FABRIC	PRV-997
S460758310	75.00	95.00	10.00	11.00	NBR/FABRIC	PRV-633
S460758314	75.00	95.00	11.00	12.00	NBR/FABRIC	PRV-825
S460758313	75.00	95.00	11.50	12.50	NBR/FABRIC	PRV-831
S460758322	75.00	95.00	12.00	13.00	NBR/FABRIC	PRV-996
S460758309	75.00	95.00	13.50	14.50	NBR/FABRIC	PRV-498
S460768306	76.00	84.00	7.90	8.90	NBR/FABRIC	PRV-499
S460768310	76.20	85.59	6.00	6.50	NBR/FABRIC	PRV-830
S460768315	76.20	88.90	8.40	9.40	NBR/FABRIC	PRV-1176
S460768308	76.20	88.90	10.00	11.00	NBR/FABRIC	PRV-656
S460768309	76.20	92.07	8.52	9.52	NBR/FABRIC	PRV-810
S460768302	76.20	92.07	10.00	11.00	NBR/FABRIC	PRV-773
S460768311	76.20	92.07	11.70	12.70	NBR/FABRIC	PRV-927
S460768312	76.20	95.25	13.50	14.50	NBR/FABRIC	PRV-929
S460768305	76.20	95.25	13.80	14.80	NBR/FABRIC	PRV-524
S460768307	76.20	101.60	12.70	13.70	NBR/FABRIC	PRV-548
S460788301	78.00	90.00	12.00	13.00	NBR/FABRIC	PRV-1212
S460808322	80.00	90.00	7.30	7.80	NBR/FABRIC	PRV-709
S460808339	80.00	90.00	8.00	9.00	NBR/FABRIC	PRV-998
S460808311	80.00	90.00	10.00	11.00	NBR/FABRIC	PRV-347
S460808320	80.00	90.00	11.50	12.50	NBR/FABRIC	PRV-583
S460808345	80.00	90.00	12.00	13.00	NBR/FABRIC	PRV-1071
S460808326	80.00	90.00	12.50	13.50	NBR/FABRIC	PRV-740
S460808321	80.00	91.00	9.50	10.50	NBR/FABRIC	PRV-595
S460808331	80.00	92.00	8.00	9.00	NBR/FABRIC	PRV-809
S460808323	80.00	92.00	8.80	9.80	NBR/FABRIC	PRV-710
S460808343	80.00	92.00	9.00	10.00	NBR/FABRIC	PRV-1025
S460808330	80.00	92.00	9.50	10.50	NBR/FABRIC	PRV-808
S460808333	80.00	93.00	9.00	10.00	NBR/FABRIC	PRV-887
S460808340	80.00	93.00	10.00	11.00	NBR/FABRIC	PRV-1019
S460808334	80.00	93.00	11.00	12.00	NBR/FABRIC	PRV-888
S460808338	80.00	93.00	11.00	12.00	NBR/FABRIC	PRV-973
S460808304	80.00	93.00	12.00	13.00	NBR/FABRIC	PRV-1086
S460808341	80.00	93.00	12.00	13.00	NBR/FABRIC	PRV-1020
S460808301	80.00	93.00	13.50	14.50	NBR/FABRIC	PRV-1038
S460808329	80.00	95.00	7.50	8.00	NBR/FABRIC	PRV-811
S460808328	80.00	95.00	8.00	9.00	NBR/FABRIC	PRV-812
S460808332	80.00	95.00	9.00	10.00	NBR/FABRIC	PRV-845

Part No.	d (h11)	D (H11)	H	L (+0.2)	Material	Mould No.
S460808344	80.00	95.00	9.50	10.50	NBR/FABRIC	PRV-1034
S460808314	80.00	95.00	10.00	11.00	NBR/FABRIC	PRV-398
S460808337	80.00	95.00	10.00	11.00	NBR/FABRIC	PRV-967
S460808302	80.00	95.00	11.10	12.10	NBR/FABRIC	PRV-152
S460808504	80.00	95.00	11.50	12.50	FKM/FABRIC	PRV-539
S460808335	80.00	95.00	12.00	13.00	NBR/FABRIC	PRV-928
S460808305	80.00	95.00	12.50	13.50	NBR/FABRIC	PRV-1115
S460808315	80.00	95.00	13.50	14.50	NBR/FABRIC	PRV-399
S460808303	80.00	96.00	9.60	10.60	NBR/FABRIC	PRV-153
S460808327	80.00	100.00	11.50	12.50	NBR/FABRIC	PRV-813
S460808336	80.00	100.00	12.00	13.00	NBR/FABRIC	PRV-315
S460808348	80.00	100.00	12.90	13.90	NBR/FABRIC	PRV-1149
S460808347	80.00	100.00	13.00	14.00	NBR/FABRIC	PRV-1127
S460808325	80.00	100.00	13.50	14.50	NBR/FABRIC	PRV-400
S460809001	80.00	100.00	13.50	14.50	NBR/FABRIC	SRV-1143
S460808319	80.00	105.00	12.00	13.00	NBR/FABRIC	PRV-500
S460828303	82.55	95.25	9.52	10.52	NBR/FABRIC	PRV-631
S460828304	82.55	95.25	12.70	13.70	NBR/FABRIC	PRV-632
S460828305	82.55	97.50	12.70	13.70	NBR/FABRIC	PRV-629
S460828309	82.55	101.60	9.20	10.20	NBR/FABRIC	PRV-932
S460828306	82.55	101.60	9.52	10.52	NBR/FABRIC	PRV-630
S460828308	82.55	101.60	13.28	14.30	NBR/FABRIC	PRV-814
S460858317	85.00	93.20	11.00	12.00	NBR/FABRIC	PRV-1100
S460858310	85.00	95.00	7.30	7.80	NBR/FABRIC	PRV-561
S460858303	85.00	95.00	9.00	10.00	NBR/FABRIC	PRV-318
S460858314	85.00	97.00	8.70	9.70	NBR/FABRIC	PRV-930
S460858307	85.00	97.00	11.50	12.50	NBR/FABRIC	PRV-501
S460858312	85.00	100.00	9.00	10.00	NBR/FABRIC	PRV-846
S460858301	85.00	100.00	10.00	11.00	NBR/FABRIC	PRV-964
S460858318	85.00	100.00	10.50	11.50	NBR	PRV-1265
S460858309	85.00	100.00	10.80	11.80	NBR/FABRIC	PRV-560
S460858315	85.00	100.00	12.00	13.00	NBR/FABRIC	PRV-993
S460858313	85.00	105.00	11.00	12.00	NBR/FABRIC	PRV-875
S460858316	85.00	105.00	12.00	13.00	NBR/FABRIC	PRV-992
S460858306	85.00	105.00	12.50	13.50	NBR/FABRIC	PRV-465
S460858308	85.00	105.00	13.40	14.40	NBR/FABRIC	PRV-556
S460858311	85.72	104.77	13.80	14.80	NBR/FABRIC	PRV-711
S460868301	86.00	98.00	9.20	10.20	NBR/FABRIC	PRV-931
S460888307	88.90	101.60	8.60	9.60	NBR/FABRIC	PRV-1132
S460888305	88.90	101.60	9.20	10.20	NBR/FABRIC	PRV-933
S460888302	88.90	107.95	11.60	12.60	NBR/FABRIC	PRV-209
S460888304	88.90	114.30	11.60	12.60	NBR/FABRIC	PRV-584
S460888306	88.90	114.30	17.50	18.50	NBR/FABRIC	PRV-935
S460908309	90.00	100.00	10.00	11.00	NBR/FABRIC	PRV-104
S460908317	90.00	100.00	10.00	11.00	NBR/FABRIC	PRV-783
S460908313	90.00	100.00	10.20	11.20	NBR/FABRIC	PRV-563
S460908318	90.00	100.00	10.50	11.50	NBR/FABRIC	PRV-784
S460908324	90.00	103.00	9.00	10.00	NBR/FABRIC	PRV-889
S460908328	90.00	103.00	10.00	11.00	NBR/FABRIC	PRV-1021
S460908323	90.00	103.00	11.00	12.00	NBR/FABRIC	PRV-890
S460908327	90.00	103.00	12.00	13.00	NBR/FABRIC	PRV-1022
S460908319	90.00	105.00	8.70	9.70	NBR/FABRIC	PRV-822

Bold sizes are readily available in stock.
Other materials are available on request.

S46

Single Acting Rod Seal

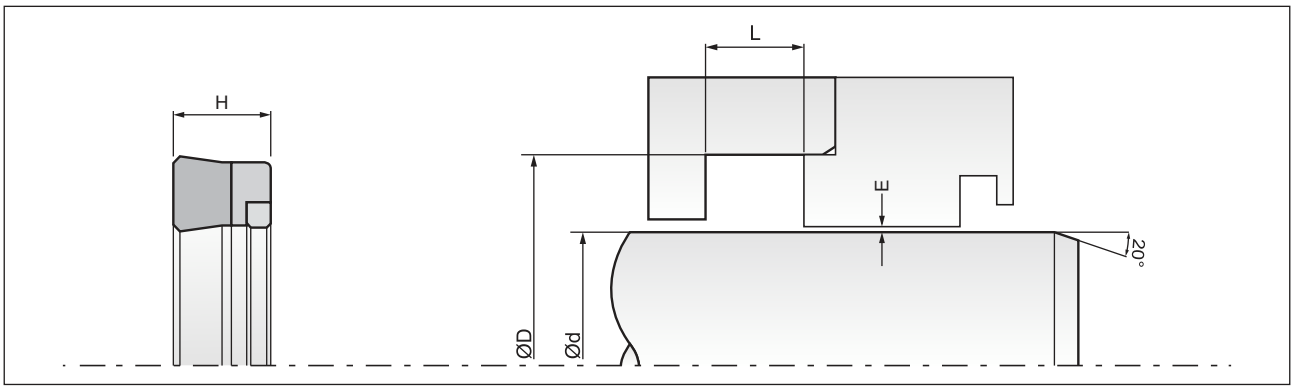

Part No.	d (h11)	D (H11)	H	L (+0.2)	Material	Mould No.
S460908303	90.00	105.00	9.50	10.50	NBR/FABRIC	PRV-1072
S460908301	90.00	105.00	10.00	11.00	NBR/FABRIC	PRV-1087
S460908306	90.00	105.00	11.50	12.50	NBR/FABRIC	PRV-322
S460908332	90.00	105.00	11.60	12.60	NBR/FABRIC	PRV-320
S460908314	90.00	105.00	12.00	13.00	NBR/FABRIC	PRV-635
S460908330	90.00	105.00	12.00	13.00	NBR/FABRIC	PRV-1033
S460908331	90.00	105.00	13.00	14.00	NBR/FABRIC	PRV-1081
S460908308	90.00	105.00	13.50	14.50	NBR/FABRIC	PRV-321
S460908321	90.00	106.20	9.80	10.80	NBR/FABRIC	PRV-839
S460908322	90.00	110.00	11.00	12.00	NBR/FABRIC	PRV-876
S460908316	90.00	110.00	12.00	13.00	NBR/FABRIC	PRV-779
S460908326	90.00	110.00	12.00	13.00	NBR/FABRIC	PRV-989
S460908304	90.00	110.00	12.50	13.50	NBR/FABRIC	PRV-130
S460908337	90.00	110.00	13.00	14.00	NBR/FABRIC	PRV-1256
S460908336	90.00	110.00	13.50	14.50	NBR	PRV-1221
S460908315	90.00	110.00	14.50	15.50	NBR/FABRIC	PRV-636
S460908329	90.00	115.00	12.00	13.00	NBR/FABRIC	PRV-1026
S460918301	91.00	99.00	7.90	8.90	NBR/FABRIC	PRV-503
S460928302	92.00	102.00	5.50	6.00	NBR/FABRIC	PRV-801
S460928301	92.07	111.12	11.30	12.30	NBR/FABRIC	PRV-637
S460928303	92.07	111.12	13.60	14.60	NBR/FABRIC	PRV-934
S460928305	92.07	117.42	13.80	14.80	NBR	PRV-1224
S460958315	95.00	105.00	10.00	11.00	NBR/FABRIC	PRV-786
S460958319	95.00	105.00	10.30	11.30	NBR/FABRIC	PRV-966
S460958325	95.00	105.00	10.50	11.50	NBR/FABRIC	PRV-1215
S460958321	95.00	105.00	12.00	13.00	NBR/FABRIC	PRV-991
S460958308	95.00	107.00	11.70	12.70	NBR/FABRIC	PRV-557
S460958322	95.00	110.00	9.50	10.50	NBR/FABRIC	PRV-1073
S460958301	95.00	110.00	10.00	11.00	NBR/FABRIC	PRV-1050
S460958316	95.00	110.00	11.00	12.00	NBR/FABRIC	PRV-877
S460958309	95.00	110.00	11.36	12.36	NBR/FABRIC	PRV-252
S460958320	95.00	110.00	12.00	13.00	NBR/FABRIC	PRV-990
S460958326	95.00	110.00	13.00	14.00	NBR/FABRIC	PRV-1269
S460958318	95.00	115.00	10.00	11.00	NBR/FABRIC	PRV-936
S460958317	95.00	115.00	11.00	12.00	NBR/FABRIC	PRV-878
S460958306	95.00	115.00	12.50	13.50	NBR/FABRIC	PRV-504
S460958314	95.00	115.00	13.50	14.50	NBR/FABRIC	PRV-402
S460958302	95.00	115.00	14.50	15.50	NBR/FABRIC	PRV-159
S460958311	95.00	120.00	13.50	14.50	NBR/FABRIC	PRV-586
S460958307	95.00	120.00	22.00	23.00	NBR/FABRIC	PRV-502
S460958312	95.25	114.30	12.40	13.40	NBR/FABRIC	PRV-585
S460958313	95.25	120.65	18.20	19.20	NBR/FABRIC	PRV-588
S460988301	98.00	107.50	6.20	6.70	NBR/FABRIC	PRV-912
S461008333	100.00	108.30	11.00	12.00	NBR/FABRIC	PRV-1098
S461008315	100.00	110.00	8.50	9.50	NBR/FABRIC	PRV-505
S461008319	100.00	110.00	12.00	13.00	NBR/FABRIC	PRV-589
S461008324	100.00	113.00	12.35	13.30	NBR/FABRIC	PRV-738
S461008327	100.00	113.00	12.70	13.70	NBR/FABRIC	PRV-913
S461008340	100.00	113.00	13.00	14.00	NBR/FABRIC	PRV-1214
S461008316	100.00	113.00	14.50	15.50	NBR/FABRIC	PRV-506
S461008326	100.00	115.00	9.00	10.00	NBR/FABRIC	PRV-847
S461008303	100.00	115.00	10.00	11.00	NBR/FABRIC	PRV-1040

Part No.	d (h11)	D (H11)	H	L (+0.2)	Material	Mould No.
S461008320	100.00	115.00	10.50	11.50	NBR/FABRIC	PRV-712
S461008343	100.00	115.00	11.00	12.00	NBR/FABRIC	PRV-1274
S461008308	100.00	115.00	11.50	12.50	NBR/FABRIC	PRV-327
S461008503	100.00	115.00	11.50	12.50	FKM/FABRIC	PRV-737
S461008321	100.00	115.00	12.00	13.00	NBR/FABRIC	PRV-713
S461008309	100.00	115.00	13.50	14.50	NBR/FABRIC	PRV-324
S461008342	100.00	120.00	10.50	11.50	NBR/FABRIC	PRV-1273
S461008341	100.00	120.00	11.00	12.00	NBR/FABRIC	PRV-1255
S461008322	100.00	120.00	11.20	12.20	NBR/FABRIC	PRV-702
S461008328	100.00	120.00	11.50	12.50	NBR/FABRIC	PRV-938
S461008504	100.00	120.00	11.70	12.70	FKM/FABRIC	PRV-1105
S461008329	100.00	120.00	12.00	13.00	NBR/FABRIC	PRV-1028
S461008339	100.00	120.00	12.00	13.00	NBR/FABRIC	PRV-1205
S461008304	100.00	120.00	13.00	14.00	NBR/FABRIC	PRV-326
S461008310	100.00	120.00	13.50	14.50	NBR/FABRIC	PRV-323
S461008335	100.00	120.00	14.00	15.00	NBR/FABRIC	PRV-1211
S461006601	100.00	120.00	15.00	16.00	FKM	PRV-479
S461008330	100.00	120.00	15.00	16.00	NBR/FABRIC	PRV-1074
S461008331	100.00	125.00	12.00	13.00	NBR/FABRIC	PRV-1075
S461108318	100.00	125.00	14.40	15.40	NBR/FABRIC	PRV-1150
S461008323	100.00	125.00	14.50	15.50	NBR/FABRIC	PRV-325
S461008332	100.00	125.00	15.00	16.00	NBR/FABRIC	PRV-1076
S461018303	101.60	114.30	9.53	10.53	NBR/FABRIC	PRV-590
S461018304	101.60	114.30	12.70	13.70	NBR/FABRIC	PRV-638
S461018305	101.60	117.47	13.00	14.00	NBR/FABRIC	PRV-802
S461018306	101.60	123.82	16.18	17.18	NBR/FABRIC	PRV-939
S461048301	104.00	130.00	18.50	19.50	NBR/FABRIC	PRV-639
S461058309	105.00	117.00	12.00	13.00	NBR/FABRIC	PRV-640
S461058307	105.00	120.00	9.00	10.00	NBR/FABRIC	PRV-507
S461058301	105.00	120.00	12.00	13.00	NBR/FABRIC	PRV-161
S4610058312	105.00	125.00	12.00	13.00	NBR/FABRIC	PRV-1077
S461058310	105.00	125.00	13.50	14.50	NBR/FABRIC	PRV-805
S461058313	105.00	125.00	15.00	16.00	NBR/FABRIC	PRV-1068
S461068301	106.00	118.00	9.20	10.20	NBR/FABRIC	PRV-937
S461078303	107.00	115.00	7.40	7.90	NBR/FABRIC	PRV-641
S461078304	107.00	115.00	8.00	9.00	NBR/FABRIC	PRV-770
S461078305	107.95	127.00	12.70	13.70	NBR/FABRIC	PRV-1169
S461108310	110.00	122.00	9.00	10.00	NBR/FABRIC	PRV-703
S461108315	110.00	125.00	9.50	10.50	NBR/FABRIC	PRV-1078
S461108312	110.00	125.00	10.00	11.00	NBR/FABRIC	PRV-803
S461108311	110.00	125.00	10.50	11.50	NBR/FABRIC	PRV-804
S461108501	110.00	125.00	11.00	12.00	FKM/FABRIC	PRV-1227
S461108307	110.00	125.00	11.20	12.20	NBR/FABRIC	PRV-704
S461108307	110.00	125.00	12.00	13.00	NBR/FABRIC	PRV-508
S461108308	110.00	125.00	15.00	16.00	NBR/FABRIC	PRV-509
S461108308	110.00	125.00	15.00	16.00	NBR/FABRIC	PRV-780
S461108313	110.00	130.00	11.00	12.00	NBR/FABRIC	PRV-942
S461108320	110.00	130.00	11.40	12.40	NBR	PRV-1248
S461108317	110.00	130.00	12.00	13.00	NBR/FABRIC	PRV-1079
S461108301	110.00	130.00	12.50	13.50	NBR/FABRIC	PRV-162
S461108303	110.00	130.00	13.50	14.50	NBR/FABRIC	PRV-403
S461108321	110.00	130.00	14.00	15.00	NBR/FABRIC	PRV-1251

Bold sizes are readily available in stock.
Other materials are available on request.

S46

Single Acting Rod Seal

MAX SPARE LIMITED
QUALITY. PRECISION. SPEED.

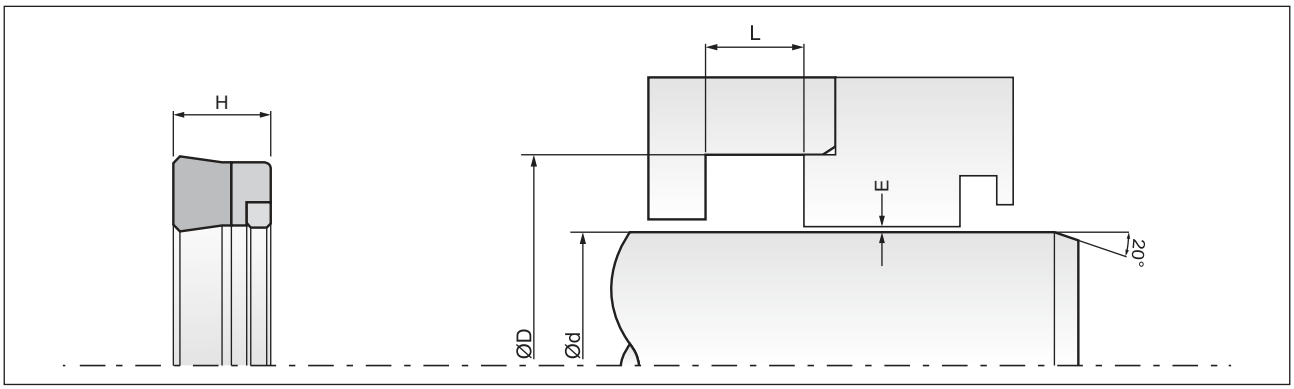

Part No.	d (h11)	D (H11)	H	L (+0.2)	Material	Mould No.
S461108314	110.00	130.00	15.00	16.00	NBR/FABRIC	PRV-1027
S461108302	110.00	135.00	14.20	15.20	NBR/FABRIC	PRV-915
S461108309	110.00	140.00	15.00	16.00	NBR/FABRIC	PRV-558
S461108319	110.00	140.00	15.50	16.50	NBR/FABRIC	PRV-1162
S461118301	111.12	123.82	10.87	11.87	NBR/FABRIC	PRV-1049
S461148301	114.30	127.00	12.70	13.70	NBR/FABRIC	PRV-591
S461148301	114.30	127.00	12.70	13.70	NBR/FABRIC	PRV-1159
S461148302	114.30	133.35	11.40	12.40	NBR/FABRIC	PRV-642
S461148303	114.30	139.70	18.00	19.00	NBR/FABRIC	PRV-714
S461158317	115.00	123.20	11.00	12.00	NBR/FABRIC	PRV-1097
S461158314	115.00	125.00	7.40	7.90	NBR/FABRIC	PRV-914
S461158315	115.00	125.00	9.20	10.20	NBR/FABRIC	PRV-940
S461158316	115.00	125.00	10.50	11.50	NBR/FABRIC	PRV-941
S461158313	115.00	125.00	12.00	13.00	NBR/FABRIC	PRV-705
S461158308	115.00	130.00	11.50	12.50	NBR/FABRIC	PRV-592
S461158309	115.00	135.00	10.50	11.50	NBR/FABRIC	PRV-643
S461158310	115.00	135.00	12.00	13.00	NBR/FABRIC	PRV-654
S461158311	115.00	135.00	13.50	14.50	NBR/FABRIC	PRV-652
S461158312	115.00	135.00	15.00	16.00	NBR/FABRIC	PRV-651
S461188301	118.00	133.00	9.00	10.00	NBR/FABRIC	PRV-510
S461208312	120.00	130.00	11.00	12.00	NBR/FABRIC	PRV-650
S461208316	120.00	130.00	15.00	16.00	NBR/FABRIC	PRV-1069
S461208320	120.00	132.70	9.00	10.00	NBR/FABRIC	PRV-1238
S461208303	120.00	135.00	11.60	12.60	NBR/FABRIC	PRV-421
S461208313	120.00	135.00	12.00	13.00	NBR/FABRIC	PRV-706
S461208314	120.00	135.00	12.50	13.50	NBR/FABRIC	PRV-753
S461208315	120.00	135.00	14.00	15.00	NBR/FABRIC	PRV-806
S461208317	120.00	135.00	15.00	16.00	NBR/FABRIC	PRV-1080
S461208321	120.00	140.00	11.00	12.00	NBR	PRV-1263
S461208319	120.00	140.00	12.00	13.00	NBR/FABRIC	PRV-1213
S461208306	120.00	140.00	13.50	14.50	NBR/FABRIC	PRV-752
S461208301	120.00	140.00	14.50	15.50	NBR/FABRIC	PRV-211
S461208304	120.00	145.00	17.50	18.50	NBR/FABRIC	PRV-559
S461208311	120.00	145.00	18.50	19.50	NBR/FABRIC	PRV-511
S461258311	125.00	140.00	9.00	10.00	NBR/FABRIC	PRV-943
S461258307	125.00	140.00	10.00	11.00	NBR/FABRIC	PRV-648
S461258309	125.00	140.00	12.00	13.00	NBR/FABRIC	PRV-775
S461258304	125.00	145.00	12.00	13.00	NBR/FABRIC	PRV-653
S461258501	125.00	145.00	12.00	13.00	FKM/FABRIC	PRV-126
S461258306	125.00	145.00	13.10	14.10	NBR/FABRIC	PRV-604
S461258502	125.00	145.00	15.00	16.00	FKM/FABRIC	PRV-537
S46125	125.00	145.00	15.50	16.50	NBR/FABRIC	PRV-512
S461258305	125.00	145.00	15.50	16.50	NBR	PRV-1218
S461258312	125.00	145.00	16.00	17.00	NBR/FABRIC	PRV-1275
S461258308	125.00	150.00	13.10	14.10	NBR/FABRIC	PRV-716
S461268301	126.00	134.00	7.50	8.00	NBR/FABRIC	PRV-649
S461278307	127.00	139.70	10.00	11.00	NBR	PRV-1246
S461278304	127.00	145.00	10.50	11.50	NBR/FABRIC	PRV-916
S461278303	127.00	145.00	11.50	12.50	NBR/FABRIC	PRV-513
S461278305	127.00	146.05	11.70	12.70	NBR/FABRIC	PRV-944
S461278306	127.00	146.05	14.88	15.88	NBR/FABRIC	PRV-1129
S461308306	130.00	145.00	9.50	10.50	NBR/FABRIC	PRV-259

Part No.	d (h11)	D (H11)	H	L (+0.2)	Material	Mould No.
S461308309	130.00	145.00	10.00	11.00	NBR/FABRIC	PRV-514
S461308311	130.00	145.00	12.00	13.00	NBR/FABRIC	PRV-647
S461308312	130.00	145.00	12.50	13.50	NBR/FABRIC	PRV-782
S461308315	130.00	145.00	14.00	15.00	NBR/FABRIC	PRV-917
S461308313	130.00	150.00	11.50	12.50	NBR/FABRIC	PRV-807
S461308310	130.00	150.00	14.50	15.50	NBR/FABRIC	PRV-515
S461308316	130.00	155.00	15.78	16.78	NBR/FABRIC	PRV-1119
S461308314	130.00	155.00	17.50	18.50	NBR/FABRIC	PRV-823
S461318301	131.00	144.00	12.50	13.50	NBR/FABRIC	PRV-525
S461328301	132.00	140.20	11.00	12.00	NBR/FABRIC	PRV-1096
S461338301	133.35	152.40	11.70	12.70	NBR/FABRIC	PRV-945
S461338302	133.35	152.40	14.88	15.88	NBR/FABRIC	PRV-1130
S461358310	135.00	150.00	9.00	10.00	NBR/FABRIC	PRV-555
S461358303	135.00	150.00	9.50	10.50	NBR/FABRIC	PRV-377
S461358302	135.00	150.00	13.00	14.00	NBR/FABRIC	PRV-269
S461358308	135.00	155.00	13.00	14.00	NBR/FABRIC	PRV-516
S461358312	135.00	155.00	15.00	16.00	NBR/FABRIC	PRV-1237
S461358311	135.00	155.00	18.80	19.80	NBR/FABRIC	PRV-379
S461358309	135.00	160.00	13.50	14.50	NBR/FABRIC	PRV-517
S461398302	139.70	158.75	14.88	15.88	NBR/FABRIC	PRV-946
S461398301	139.70	165.10	18.20	19.20	NBR/FABRIC	PRV-541
S461408305	140.00	150.00	11.00	12.00	NBR/FABRIC	PRV-672
S461408306	140.00	150.00	12.00	13.00	NBR/FABRIC	PRV-715
S461408310	140.00	160.00	11.40	12.40	NBR/FABRIC	PRV-1172
S461408302	140.00	160.00	12.50	13.50	NBR/FABRIC	PRV-165
S461408303	140.00	160.00	13.40	14.40	NBR/FABRIC	PRV-562
S461408307	140.00	160.00	14.00	15.00	NBR/FABRIC	PRV-947
S461408304	140.00	160.00	14.50	15.50	NBR/FABRIC	PRV-336
S461408502	140.00	160.00	14.60	15.60	FKM/FABRIC	PRV-1225
S461458301	145.00	157.70	10.00	11.00	NBR/FABRIC	PRV-1182
S461508305	150.00	165.00	12.90	13.90	NBR/FABRIC	PRV-960
S461508302	150.00	170.00	12.00	13.00	NBR/FABRIC	PRV-518
S461508306	150.00	170.00	13.00	14.00	NBR/FABRIC	PRV-1113
S461508303	150.00	170.00	14.50	15.50	NBR/FABRIC	PRV-519
S461528302	152.00	162.20	11.00	12.00	NBR/FABRIC	PRV-1095
S461528301	152.40	177.80	19.50	20.50	NBR/FABRIC	PRV-169
S461538301	153.00	168.00	12.00	13.00	NBR/FABRIC	PRV-380
S461558301	155.00	180.00	15.00	16.00	NBR/FABRIC	PRV-101
S461588301	158.75	177.80	13.20	14.20	NBR/FABRIC	PRV-751
S461608305	160.00	170.00	11.00	12.00	NBR/FABRIC	PRV-671
S461608303	160.00	175.00	15.00	16.00	NBR/FABRIC	PRV-670
S461608306	160.00	180.00	13.30	14.30	NBR/FABRIC	PRV-918
S461608307	160.00	185.00	19.00	20.00	NBR/FABRIC	PRV-1091
S461638301	163.00	177.80	12.50	13.50	NBR/FABRIC	PRV-669
S461658304	165.00	177.80	10.00	11.00	NBR/FABRIC	PRV-462
S461658305	165.00	180.00	14.50	15.50	NBR/FABRIC	PRV-520
S461708301	170.00	182.70	9.20	10.20	NBR/FABRIC	PRV-540
S4601708304	170.00	182.70	9.50	10.50	NBR/FABRIC	PRV-1160
S461708303	170.00	190.00	15.00	16.00	NBR/FABRIC	PRV-717
S461728301	172.00	182.20	11.00	12.00	NBR/FABRIC	PRV-1101
S461758302	175.00	195.00	16.00	17.00	NBR/FABRIC	PRV-668
S461758301	175.00	200.00	13.10	14.10	NBR/FABRIC	PRV-593

Bold sizes are readily available in stock.
Other materials are available on request.

S46

Single Acting Rod Seal

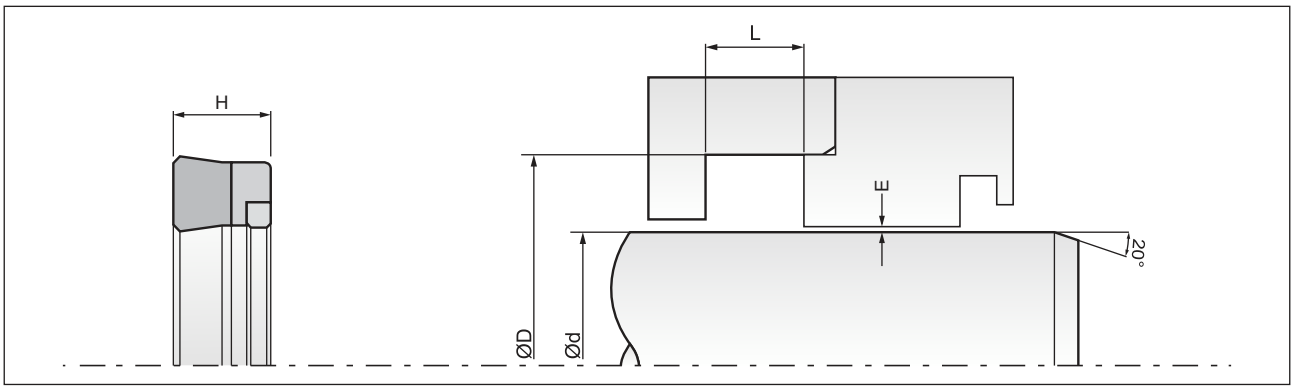

Part No.	d (h11)	D (H11)	H	L (+0.2)	Material	Mould No.
S461808307	180.00	195.00	11.50	12.50	NBR/FABRIC	PRV-1266
S461808304	180.00	195.00	13.00	14.00	NBR/FABRIC	PRV-667
S461808301	180.00	200.00	14.50	15.50	NBR/FABRIC	PRV-521
S461808305	180.00	210.00	18.90	19.90	NBR/FABRIC	PRV-666
S461808306	180.00	210.00	20.50	21.50	NBR/FABRIC	PRV-1118
S461808303	180.00	210.00	22.50	23.50	NBR/FABRIC	PRV-536
S461858301	185.00	205.00	13.00	14.00	NBR/FABRIC	PRV-522
S461858302	185.00	210.00	18.80	19.80	NBR/FABRIC	PRV-665
S461888301	188.00	203.00	12.00	13.00	NBR/FABRIC	PRV-948
S461948301	194.00	204.20	11.00	12.00	NBR/FABRIC	PRV-1102
S461968301	196.00	208.70	8.70	9.70	NBR/FABRIC	PRV-594
S461968302	196.85	228.60	24.20	25.20	NBR/FABRIC	PRV-664
S462038301	203.20	234.95	20.00	21.00	NBR/FABRIC	PRV-663
S462108301	210.00	230.00	13.30	14.30	NBR/FABRIC	PRV-662

Part No.	d (h11)	D (H11)	H	L (+0.2)	Material	Mould No.
S462108302	210.00	240.00	21.00	22.00	NBR/FABRIC	PRV-661
S462158302	215.90	241.30	19.05	20.00	NBR/FABRIC	PRV-1094
S462158301	215.90	247.65	24.20	25.20	NBR/FABRIC	PRV-660
S462188301	218.00	228.20	11.00	12.00	NBR/FABRIC	PRV-1090
S462208305	220.00	240.00	15.00	16.00	NBR	PRV-1217
S462208302	220.00	250.00	22.20	23.20	NBR/FABRIC	PRV-718
S462308301	230.00	260.00	18.90	19.90	NBR/FABRIC	PRV-723
S462388301	238.00	258.00	14.40	15.40	NBR/FABRIC	PRV-659
S462408304	240.00	255.00	10.00	11.00	NBR/FABRIC	PRV-1185
S462408302	240.00	255.00	12.50	13.50	NBR/FABRIC	PRV-658
S462408303	240.00	260.00	14.00	15.00	NBR/FABRIC	PRV-949
S462798301	279.40	311.15	24.20	25.20	NBR/FABRIC	PRV-657
S462808301	280.00	320.00	20.30	21.30	NBR/FABRIC	PRV-549
S462808302	280.00	320.00	21.50	22.50	NBR/FABRIC	PRV-1167

Bold sizes are readily available in stock.
Other materials are available on request.

S15

Single Acting Rod Composite Seal

DETAILS

S15 is a single acting rod seal suitable for light to medium duty hydraulic cylinders and is suitable for cylinders with a small groove dimensions, thus enabling a compact gland. The S15 is a combination of O-ring energizer and outer seal ring made of PTFE added with a filler to increase the resistance of seal ring to high pressure. Generally, Bronze is used as filler. But, Glass/Graphite filled PTFE can also be made.
The S15 seal can easily be fitted in a single gland and also suitable for a 2-piece Gland application. The Bronze filled PTFE inner seal ring when in contact with the piston rod, the PTFE ensure a stick slip-free movement & reduces friction to a minimum. Whereas the filler increases the strength in the seal ring to prevent it from extruding & to withstand pressure as high as 400 BAR.

COMPATIBILITY

Mineral oils, hydraulic oils, water and air

MATERIAL

Sealing Ring : Bronze filled PTFE
(Glass / Graphite on request)
O Ring : NBR / FKM 70/75 shore A

APPLICATION

- Construction equipments.
- Medium to heavy duty cylinders.
- Presses, Mining, Machine Tools.
- Injection moulding machines.
- Earthmoving equipment.
- Automotive industry.

OPERATING CONDITIONS

Temperature Range : NBR : -30°C to + 100°C
FKM : -30°C to + 220°C
Pressure : 400 Bar
Speed : 10.0 m/s

FEATURES

- High static and dynamic sealing effect.
- Self-lubricating seal ring.
- High surface speed.
- Friction at minimum.
- Stick-slip free operation.
- Any size upto 1200 mm available on request.
- Can also be used in conjunction with E07/S19 rod seals for heavy duty application.

SURFACE ROUGHNESS

Static : 1.6 µmRa
Dynamic : 0.4 µmRa

INSTALLATION & ASSEMBLY

Carefull fitting is a prerequisite for the correct function of the seal. Please refer to page no.26 for guidelines.

PERMISSIBLE EXTRUSION GAP E max (mm)

Rod Diameter d (h11)	Groove Diameter D (H11)	Groove Width L (±0.20)	Permissible Extrusion Gap E Max (in mm)			O Ring Cross Sec. (c/s)
			Pressure 100 Bar	Pressure 200 Bar	Pressure 400 Bar	
3 - 7.90	d + 4.90	2.20	0.30	0.20	0.15	1.78
8 - 18.90	d + 7.30	3.20	0.40	0.25	0.15	2.62
19 - 37.90	d + 10.70	4.20	0.50	0.30	0.20	3.53
38 - 199.90	d + 15.10	6.30	0.60	0.40	0.25	5.33
200 - 255.90	d + 20.50	8.10	0.70	0.60	0.35	6.99
256 - 649.90	d + 24.00	8.10	0.80	0.70	0.40	6.99
650 - 999.90	d + 27.30	9.50	0.90	0.80	0.50	8.40

S15

Single Acting Rod Composite Seal

MAX SPARE LIMITED
QUALITY. PRECISION. SPEED.

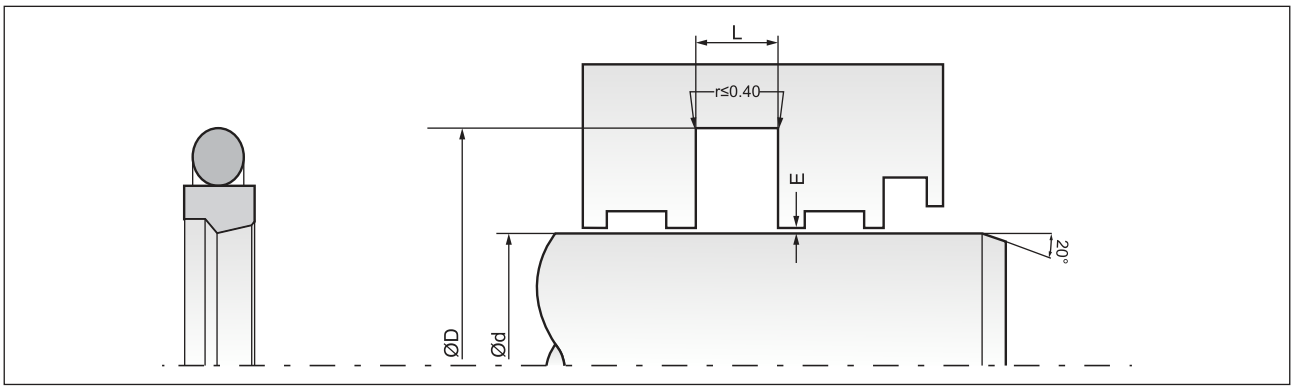

Part No.	d (h11)	D (H11)	L (+0.2)	O-Ring Part No.	Material	Mould No.
S150036401	3.00	7.90	2.20	OR17800447	FKM/BFT	S15-276
S150030801	3.00	7.90	2.20	OR17800447	NBR/BFT	S15-255
S150040801	4.00	8.90	2.20	OR17800528	NBR/BFT	S15-254
S150050801	5.00	9.90	2.20	OR17800675	NBR/BFT	S15-256
S150066401	6.00	10.90	2.20	OR17800765	FKM/BFT	S15-198
S150060801	6.00	10.90	2.20	OR17800765	NBR/BFT	S15-101
S150070801	7.00	11.90	2.20	OR17800874	NBR/BFT	S15-350
S150080801	8.00	12.90	2.20	OR17800975	NBR/BFT	S15-336
S150086401	8.00	12.90	2.20	OR17800975	FKM/BFT	S15-426
S150100801	10.00	14.90	2.20	OR17800110	NBR/BFT	S15-302
S150106401	10.00	14.90	2.20	OR17800110	FKM/BFT	S15-339
S150106402	10.00	17.30	3.20	OR26201237	FKM/BFT	S15-199
S150100802	10.00	17.30	3.20	OR26201237	NBR/BFT	S15-102
S150116401	11.00	15.90	2.20	OR17801242	FKM/BFT	S15-427
S150120801	12.00	16.90	2.20	OR17801400	NBR/BFT	S15-188
S150120802	12.00	19.30	3.20	OR26201395	NBR/BFT	S15-103
S150126401	12.00	19.30	3.20	OR26201395	FKM/BFT	S15-358
S150140801	14.00	18.90	2.20	OR17801717	NBR/BFT	S15-412
S150146401	14.00	18.90	2.20	OR17801717	FKM/BFT	S15-391
S150140802	14.00	21.30	3.20	OR26201654	NBR/BFT	S15-104
S150150803	15.00	19.90	2.20	OR17801717	NBR/BFT	S15-377
S150150802	15.00	22.30	3.20	OR26201796	NBR/BFT	S15-183
S150156401	15.00	22.30	3.20	OR26201796	FKM/BFT	S15-274
S150160801	16.00	20.90	2.20	OR17801760	NBR/BFT	S15-257
S150166402	16.00	23.30	3.20	OR26201872	FKM/BFT	S15-201
S150160802	16.00	23.30	3.20	OR26201872	NBR/BFT	S15-105
S150176401	17.00	24.30	3.20	OR26202029	FKM/BFT	S15-195
S150186404	18.00	22.90	2.20	OR17802000	FKM/BFT	S15-420
S150186403	18.00	25.30	3.20	OR26202063	FKM/BFT	S15-390
S150180802	18.00	25.30	3.20	OR26202063	NBR/BFT	S15-106
S150206402	20.00	27.30	3.20	OR26202222	FKM/BFT	S15-383
S150200801	20.00	27.30	3.20	OR26202222	NBR/BFT	S15-107
S150206401	20.00	30.70	4.20	OR35302340	FKM/BFT	S15-194
S150200802	20.00	30.70	4.20	OR35302340	NBR/BFT	S15-108
S150220801	22.00	29.30	3.20	OR26202500	NBR/BFT	S15-109
S150226401	22.00	29.30	3.20	OR26202500	FKM/BFT	S15-202
S150220802	22.00	32.70	4.20	OR35302657	NBR/BFT	S15-110
S150226402	22.00	32.70	4.20	OR35302657	FKM/BFT	S15-203
S150240807	24.00	31.30	3.20	OR26202664	NBR/BFT	S15-352
S150256401	25.00	32.30	3.20	OR26202824	FKM/BFT	S15-204
S150250801	25.00	32.30	3.20	OR26202824	NBR/BFT	S15-111
S150256402	25.00	35.70	4.20	OR35302974	FKM/BFT	S15-205
S150250802	25.00	35.70	4.20	OR35302974	NBR/BFT	S15-112
S150280801	28.00	35.30	3.20	OR26203142	NBR/BFT	S15-113
S150286401	28.00	35.30	3.20	OR26203142	FKM/BFT	S15-206
S150286402	28.00	38.70	4.20	OR35303292	FKM/BFT	S15-207
S150280802	28.00	38.70	4.20	OR35303292	NBR/BFT	S15-114
S150300801	30.00	37.50	3.20	OR26203459	NBR/BFT	S15-379
S150306402	30.00	40.70	4.20	OR35303452	FKM/BFT	S15-208
S150300802	30.00	40.70	4.20	OR35303452	NBR/BFT	S15-115
S150320801	32.00	39.30	3.20	OR26203459	NBR/BFT	S15-240
S150326402	32.00	42.70	4.20	OR35303609	FKM/BFT	S15-209

Part No.	d (h11)	D (H11)	L (+0.2)	O-Ring Part No.	Material	Mould No.
S150320802	32.00	42.70	4.20	OR35303609	NBR/BFT	S15-116
S150350802	35.00	42.30	3.20	OR26203777	NBR/BFT	S15-258
S150356401	35.00	45.70	4.20	OR35303970	FKM/BFT	S15-345
S150350801	35.00	45.70	4.20	OR35303970	NBR/BFT	S15-117
S150366405	36.00	43.30	3.20	OR26203934	FKM/BFT	S15-264
S150360801	36.00	43.30	3.20	OR26203934	NBR/BFT	S15-259
S150366401	36.00	46.70	4.20	OR35304128	FKM/BFT	S15-243
S150360802	36.00	46.70	4.20	OR35304128	NBR/BFT	S15-118
S150377001	37.00	47.70	4.20	OR35304128	NBR/BFT	S15-419
S150380801	38.00	48.70	4.20	OR35304286	NBR/BFT	S15-119
S150386401	38.00	53.10	6.30	OR53304382	FKM/BFT	S15-271
S150380802	38.00	53.10	6.30	OR53304382	NBR/BFT	S15-478
S150406403	40.00	50.70	4.20	OR35304400	FKM/BFT	S15-286
S150406401	40.00	50.70	4.20	OR35304400	FKM/BFT	S15-236
S150400801	40.00	50.70	4.20	OR35304400	NBR/BFT	S15-120
S150400802	40.00	55.10	6.30	OR53304548	NBR/BFT	S15-121
S150406402	40.00	55.10	6.30	OR53304548	FKM/BFT	S15-252
S150420801	42.00	52.70	4.20	OR35304722	NBR/BFT	S15-456
S150440801	44.00	59.10	6.30	OR53305017	NBR/BFT	S15-328
S150450804	45.00	52.30	3.20	OR26204729	NBR/BFT	S15-348
S150450801	45.00	55.70	4.20	OR35305039	NBR/BFT	S15-122
S150456402	45.00	55.70	4.20	OR35305039	FKM/BFT	S15-250
S150456405	45.00	60.10	6.30	OR53305017	FKM/BFT	S15-399
S150450802	45.00	60.10	6.30	OR53305017	NBR/BFT	S15-123
S150456401	45.00	60.10	6.30	OR53305017	FKM/BFT	S15-197
S150460802	46.00	61.10	6.30	OR50005100	NBR/BFT	S15-244
S150480805	48.00	58.70	4.20	OR35305150	NBR/BFT	S15-394
S150506404	50.00	60.70	4.20	OR35305400	FKM/BFT	S15-196
S150500801	50.00	60.70	4.20	OR35305400	NBR/BFT	S15-124
S150500802	50.00	65.10	6.30	OR53305662	NBR/BFT	S15-125
S150506401	50.00	65.10	6.30	OR53305662	FKM/BFT	S15-182
S150530801	53.00	63.50	4.20	OR35005600	NBR/BFT	S15-423
S150550801	55.00	65.70	4.20	OR35305900	NBR/BFT	S15-126
S150550802	55.00	70.10	6.30	OR53306150	NBR/BFT	S15-127
S150556401	55.00	70.10	6.30	OR53306150	FKM/BFT	S15-355
S150560801	56.00	66.70	4.20	OR35306124	NBR/BFT	S15-128
S150566402	56.00	66.70	4.20	OR35306124	FKM/BFT	S15-309
S150566404	56.00	71.10	6.30	OR53306250	FKM/BFT	S15-187
S150560802	56.00	71.10	6.30	OR53306250	NBR/BFT	S15-129
S150577001	57.00	72.10	6.30	OR53306287	NBR/BFT	S15-294
S150580808	58.00	73.10	6.30	OR53306287	NBR/BFT	S15-279
S150606602	60.00	70.70	4.20	OR35306500	FKM/BFT	S15-185
S150600801	60.00	70.70	4.20	OR35306500	NBR/BFT	S15-130
S150600802	60.00	75.10	6.30	OR53306604	NBR/BFT	S15-131
S150606402	60.00	75.10	6.30	OR53306604	FKM/BFT	S15-186
S150636401	63.00	78.10	6.30	OR53306922	FKM/BFT	S15-210
S150630801	63.00	78.10	6.30	OR53306922	NBR/BFT	S15-132
S150640801	64.00	79.10	6.30	OR53307044	NBR/BFT	S15-349
S150650801	65.00	80.10	6.30	OR53307239	NBR/BFT	S15-133
S150656401	65.00	80.10	6.30	OR53307239	FKM/BFT	S15-211
S150700804	70.00	80.70	4.20	OR35007500	NBR/BFT	S15-296
S150706404	70.00	80.70	4.20	OR35007500	FKM/BFT	S15-374

Bold sizes are readily available in stock.
Other materials are available on request.

S15

Single Acting Rod Composite Seal

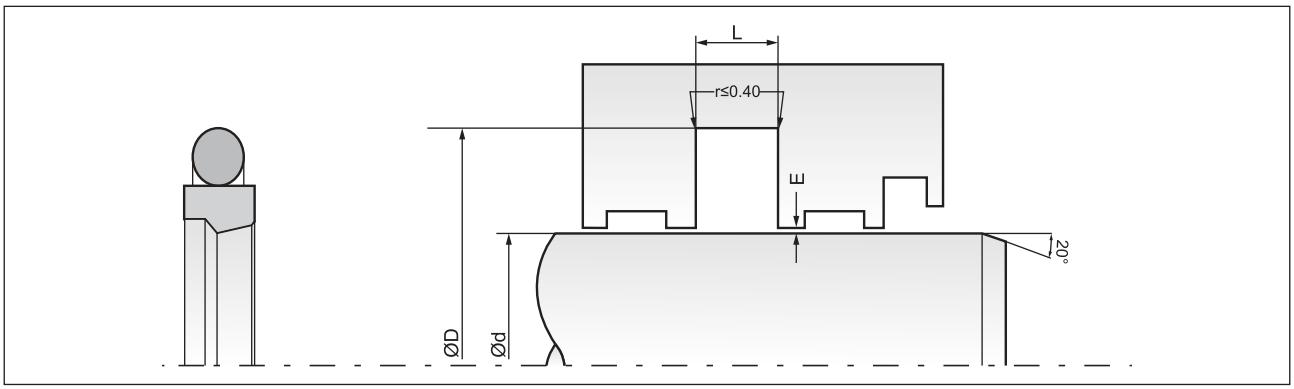

Part No.	d (h11)	D (H11)	L (+0.2)	O-Ring Part No.	Material	Mould No.
S150706401	70.00	85.10	6.30	OR53307557	FKM/BFT	S15-184
S150700801	70.00	85.10	6.30	OR53307557	NBR/BFT	S15-134
S150710801	71.00	86.10	6.30	OR53307557	NBR/BFT	S15-314
S150716401	71.00	86.10	6.30	OR53307557	FKM/BFT	S15-460
S150750803	75.00	85.70	4.20	OR35307897	NBR/BFT	S15-454
S150756402	75.00	85.70	4.20	OR35307897	FKM/BFT	S15-386
S150756401	75.00	90.10	6.30	OR53308192	FKM/BFT	S15-212
S150750801	75.00	90.10	6.30	OR53308192	NBR/BFT	S15-135
S150800803	80.00	90.70	4.20	OR35308532	NBR/BFT	S15-463
S150806401	80.00	95.10	6.30	OR53308509	FKM/BFT	S15-213
S150800801	80.00	95.10	6.30	OR53308509	NBR/BFT	S15-136
S150850801	85.00	100.10	6.30	OR53309144	NBR/BFT	S15-137
S150856401	85.00	100.10	6.30	OR53309144	FKM/BFT	S15-214
S150860802	86.00	101.60	6.30	OR53309144	NBR/BFT	S15-471
S150900801	90.00	105.10	6.30	OR53309462	NBR/BFT	S15-138
S150906401	90.00	105.10	6.30	OR53309462	FKM/BFT	S15-215
S150956401	95.00	110.10	6.30	OR53310097	FKM/BFT	S15-216
S150950801	95.00	110.10	6.30	OR53310097	NBR/BFT	S15-139
S150987001	98.00	113.10	6.30	OR53310097	NBR/BFT	S15-325
S150997004	99.00	114.10	6.30	OR53310414	FKM/BFT	S15-388
S151000802	100.00	110.70	4.20	OR35310437	NBR/BFT	S15-376
S151006401	100.00	115.10	6.30	OR53310732	FKM/BFT	S15-217
S151000801	100.00	115.10	6.30	OR53310732	NBR/BFT	S15-140
S151056401	105.00	120.10	6.30	OR53311367	FKM/BFT	S15-218
S151050801	105.00	120.10	6.30	OR53311367	NBR/BFT	S15-141
S151100801	110.00	125.10	6.30	OR53311684	NBR/BFT	S15-142
S151106401	110.00	125.10	6.30	OR53311684	FKM/BFT	S15-219
S151106402	110.00	130.50	8.10	OR70011684	FKM/BFT	S15-220
S151100802	110.00	130.50	8.10	OR70011684	NBR/BFT	S15-143
S151156401	115.00	130.10	6.30	OR53312000	FKM/BFT	S15-221
S151150801	115.00	130.10	6.30	OR53312000	NBR/BFT	S15-144
S151180802	118.00	129.00	4.20	OR35312024	NBR/BFT	S15-415
S151200806	120.00	131.00	4.20	OR35312342	NBR/BFT	S15-479
S151206401	120.00	135.10	6.30	OR53312637	FKM/BFT	S15-222
S151200801	120.00	135.10	6.30	OR53312637	NBR/BFT	S15-145
S151256401	125.00	140.10	6.30	OR53313272	FKM/BFT	S15-223
S151250801	125.00	140.10	6.30	OR53313272	NBR/BFT	S15-146
S151250802	125.00	145.50	8.10	OR70012954	NBR/BFT	S15-147
S151300801	130.00	145.10	6.30	OR53313589	NBR/BFT	S15-148
S151306401	130.00	145.10	6.30	OR53313589	FKM/BFT	S15-224
S151300802	130.00	150.50	8.10	OR70013900	NBR/BFT	S15-149
S151350801	135.00	150.10	6.30	OR53314224	NBR/BFT	S15-150
S151356401	135.00	150.10	6.30	OR53314224	FKM/BFT	S15-225
S151380802	138.00	153.10	6.30	OR53314224	NBR/BFT	S15-466
S151400808	140.00	150.70	4.20	OR35014300	NBR/BFT	S15-480
S151400801	140.00	155.10	6.30	OR53314542	NBR/BFT	S15-151
S151406401	140.00	155.10	6.30	OR53314542	FKM/BFT	S15-181
S151400802	140.00	160.50	8.10	OR70014859	NBR/BFT	S15-152
S151406402	140.00	160.50	8.10	OR70014859	FKM/BFT	S15-226
S151450801	145.00	160.10	6.30	OR53315177	NBR/BFT	S15-189
S151456401	145.00	160.10	6.30	OR53315177	FKM/BFT	S15-227
S151506401	150.00	165.10	6.30	OR53315812	FKM/BFT	S15-228

Part No.	d (h11)	D (H11)	L (+0.2)	O-Ring Part No.	Material	Mould No.
S151500801	150.00	165.10	6.30	OR53315812	NBR/BFT	S15-153
S151556401	155.00	170.10	6.30	OR53315812	FKM/BFT	S15-229
S151550801	155.00	170.10	6.30	OR53315812	NBR/BFT	S15-154
S151606401	160.00	175.10	6.30	OR53316447	FKM/BFT	S15-230
S151600801	160.00	175.10	6.30	OR53316447	NBR/BFT	S15-155
S151600802	160.00	180.50	8.10	OR70017082	NBR/BFT	S15-156
S151606402	160.00	180.50	8.10	OR70017082	FKM/BFT	S15-371
S151656401	165.00	180.10	6.30	OR53317082	FKM/BFT	S15-231
S151657001	165.00	180.10	6.30	OR53317082	NBR/BFT	S15-157
S151706401	170.00	185.10	6.30	OR53317717	FKM/BFT	S15-232
S151700801	170.00	185.10	6.30	OR53317717	NBR/BFT	S15-158
S151806401	180.00	195.10	6.30	OR53318352	FKM/BFT	S15-233
S151800801	180.00	195.10	6.30	OR53318352	NBR/BFT	S15-159
S151800802	180.00	200.50	8.10	OR70018987	NBR/BFT	S15-160
S151806403	180.00	200.50	8.10	OR70018987	FKM/BFT	S15-411
S151856401	185.00	200.10	6.30	OR53318987	FKM/BFT	S15-234
S151850801	185.00	200.10	6.30	OR53318987	NBR/BFT	S15-161
S151906401	190.00	205.10	6.30	OR53319622	FKM/BFT	S15-235
S151900801	190.00	205.10	6.30	OR53319622	NBR/BFT	S15-162
S151950802	195.00	210.10	6.30	OR53320257	NBR/BFT	S15-260
S151990802	199.00	221.00	8.10	OR70020600	NBR/BFT	S15-475
S152006401	200.00	220.50	8.10	OR69921024	FKM/BFT	S15-403
S152000801	200.00	220.50	8.10	OR69921024	NBR/BFT	S15-163
S152040801	204.00	225.00	8.10	OR70021000	NBR/BFT	S15-367
S152050802	205.00	225.50	8.10	OR69921527	NBR/BFT	S15-424
S152106401	210.00	230.50	8.10	OR69921527	FKM/BFT	S15-327
S152100801	210.00	230.50	8.10	OR69921527	NBR/BFT	S15-164
S152200801	220.00	240.50	8.10	OR70022797	NBR/BFT	S15-165
S152250801	225.00	245.50	8.10	OR70023340	NBR/BFT	S15-332
S152300801	230.00	250.50	8.10	OR69924067	NBR/BFT	S15-166
S152350801	235.00	255.50	8.10	OR69924500	NBR/BFT	S15-467
S152406401	240.00	260.50	8.10	OR70024700	FKM/BFT	S15-400
S152400801	240.00	260.50	8.10	OR70024700	NBR/BFT	S15-167
S152420801	242.00	262.50	8.10	OR69924700	NBR/BFT	S15-346
S152506401	250.00	270.50	8.10	OR69925607	FKM/BFT	S15-270
S152500801	250.00	270.50	8.10	OR69925607	NBR/BFT	S15-168
S152600801	260.00	284.00	8.10	OR69926607	NBR/BFT	S15-169
S152707001	270.00	294.00	8.10	OR69927877	FKM/BFT	S15-444
S152700801	270.00	294.00	8.10	OR69927877	NBR/BFT	S15-170
S152750801	275.00	295.00	8.10	OR69928100	NBR/BFT	S15-354
S152800801	280.00	304.00	8.10	OR69929147	NBR/BFT	S15-171
S152900801	290.00	314.00	8.10	OR69930417	NBR/BFT	S15-172
S153000801	300.00	324.00	8.10	OR69931687	NBR/BFT	S15-173
S153100801	310.00	334.00	8.10	OR69932500	NBR/BFT	S15-312
S153100801	310.00	334.00	8.10	OR69932500	NBR/BFT	S15-261
S153200801	320.00	344.00	8.10	OR69932957	NBR/BFT	S15-174
S153206401	320.00	344.00	8.10	OR69932957	FKM/BFT	S15-365
S153300802	330.00	354.00	8.10	OR69934227	NBR/BFT	S15-175
S153406401	340.00	364.00	8.10	OR69935497	FKM/BFT	S15-322
S153400801	340.00	364.00	8.10	OR69935497	NBR/BFT	S15-482
S153400802	340.00	367.30	9.50	OR85034800	NBR/BFT	S15-455
S153500802	350.00	374.00	8.10	OR69936767	NBR/BFT	S15-176

Bold sizes are readily available in stock.
Other materials are available on request.

S15

Single Acting Rod Composite Seal

MAX SPARE LIMITED
QUALITY. PRECISION. SPEED.

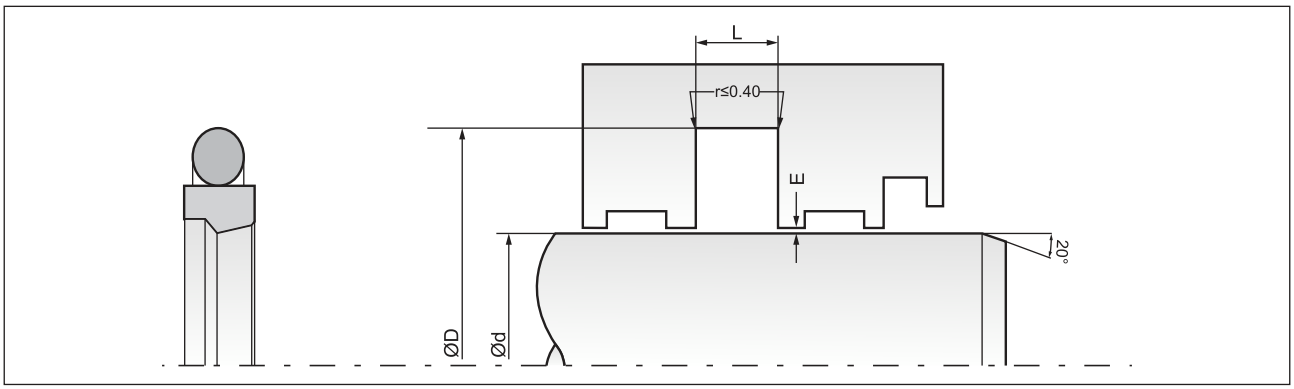

Part No.	d (h11)	D (H11)	L (+0.2)	O-Ring Part No.	Material	Mould No.
S153500801	350.00	374.00	8.10	OR69936767	NBR/BFT	S15-190
S153600801	360.00	384.00	8.10	OR69936767	NBR/BFT	S15-177
S153700801	370.00	394.00	8.10	OR69938040	NBR/BFT	S15-428
S153800802	380.00	404.00	8.10	OR69939305	NBR/BFT	S15-380
S153806401	380.00	404.00	8.10	OR69939305	FKM/BFT	S15-387
S153900801	390.00	414.00	8.10	OR69940526	NBR/BFT	S15-385
S154000801	400.00	424.00	8.10	OR69941600	NBR/BFT	S15-369
S154006401	400.00	424.00	8.10	OR69941600	FKM/BFT	S15-433
S154100801	410.00	434.00	8.10	OR69942352	NBR/BFT	S15-378
S154200801	420.00	444.00	8.10	OR69943066	NBR/BFT	S15-363
S154300801	430.00	454.00	8.10	OR69944336	NBR/BFT	S15-308
S154406401	440.00	464.00	8.10	OR69945600	FKM/BFT	S15-474
S154500801	450.00	474.00	8.10	OR69946876	NBR/BFT	S15-178
S154607101	460.00	484.00	8.10	OR69948146	NBR/BFT	S15-310
S154700801	470.00	494.00	8.10	OR69948500	NBR/BFT	S15-470
S154806401	480.00	504.00	8.10	OR69949100	FKM/BFT	S15-353
S154800801	480.00	504.00	8.10	OR69949100	NBR/BFT	S15-362
S155000801	500.00	524.00	8.10	OR69950686	NBR/BFT	S15-191
S155200802	520.00	544.00	8.10	OR69953226	NBR/BFT	S15-338

Part No.	d (h11)	D (H11)	L (+0.2)	O-Ring Part No.	Material	Mould No.
S155250801	525.00	549.00	8.10	OR69953226	NBR/BFT	S15-344
S155500801	550.00	574.00	8.10	OR69956500	NBR/BFT	S15-364
S155601102	560.00	584.00	8.10	OR69957300	NBR/BFT	S15-368
S155700804	570.00	594.00	8.10	OR69958268	NBR/BFT	S15-431
S155800801	580.00	604.00	8.10	OR69959670	NBR/BFT	S15-347
S156000801	600.00	624.00	8.10	OR69960808	NBR/BFT	S15-180
S156300801	630.00	654.00	8.10	OR69964487	NBR/BFT	S15-266
S156500803	650.00	674.00	8.10	OR70065900	NBR/BFT	S15-291
S156500804	650.00	673.30	9.50	OR84066300	NBR/BFT	S15-389
S156500801	650.00	677.30	9.50	OR84066300	NBR/BFT	S15-446
S156906401	690.00	717.30	9.50	OR84070700	FKM/BFT	S15-453
S157000802	700.00	727.30	9.50	OR84071600	NBR/BFT	S15-267
S157100801	710.00	737.30	9.50	OR84072400	NBR/BFT	S15-481
S157300801	730.00	757.30	9.50	OR84074700	NBR/BFT	S15-421
S157507001	750.00	777.30	9.50	OR84076450	NBR/BFT	S15-269
S157700803	770.00	797.30	9.50	OR84078740	NBR/BFT	S15-237
S158000802	800.00	824.00	8.10	OR69981100	NBR/BFT	S15-366
S158000801	800.00	827.30	9.50	OR84081500	NBR/BFT	S15-441

Bold sizes are readily available in stock.
Other materials are available on request.

S16

Single Acting Rod Composite Seal

DETAILS

S16 is a single-acting rod seal, comprises of a Bronze filled PTFE sealing ring and one elastomeric flat energizer element. The asymmetrical cross-sectional design of the sealing ring is best to drag oil performance during stroke in both directions.

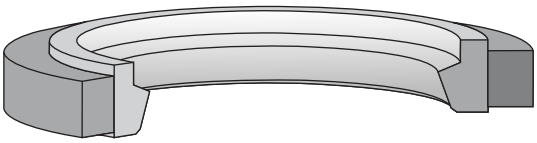

COMPATIBILITY

Mineral oils, bio oils, water soluble & water glycol fluids

MATERIAL

Sealing Ring : Bronze PTFE (Glass / Graphite on request)
Energizer Ring : Nitrile Rubber 70/75 Shore A

APPLICATION

Presses, agricultural machinery, injection moulding machines, mills, marine hydraulics, industrial vehicles, cranes, handling equipment, control and regulation equipment.

OPERATING CONDITIONS

Temperature Range : -30°C to + 100°C
Pressure : 400 Bar
Speed : 5.0 m/s

FEATURES

- Well proven design.
- Self-lubricating seal ring.
- High surface speed.
- Friction at minimum.
- Compact gland.
- Any size upto 1200 mm available on request.

SURFACE ROUGHNESS

Static : 1.6 µmRa
Dynamic : 0.4 µmRa

INSTALLATION & ASSEMBLY

When mounting the S16, the elastomer energizer ring is first placed in the groove of the housing and then the seal ring is deformed to take the form of a kidney and is put in place. During this process, make sure that the PTFE profile ring does not have any sharp edges and the sealing edge is properly positioned with respect to the direction of pressure. The complete fitting operation can be performed only on the rounded edges.Please refer to page no.26 for guidelines.

PERMISSIBLE EXTRUSION GAP E max (mm)

Profile L (in mm)	Permissible Extrusion Gap E Max (in mm)		
	Pressure 100 Bar	Pressure 200 Bar	Pressure 400 Bar
10.0	0.75	0.50	0.40
12.5	0.75	0.65	0.50
15.0	0.75	0.65	0.50
17.5	0.75	0.65	0.50
20.0	0.80	0.70	0.55

S16

Single Acting Rod Composite Seal

MAX SPARE LIMITED
QUALITY. PRECISION. SPEED.

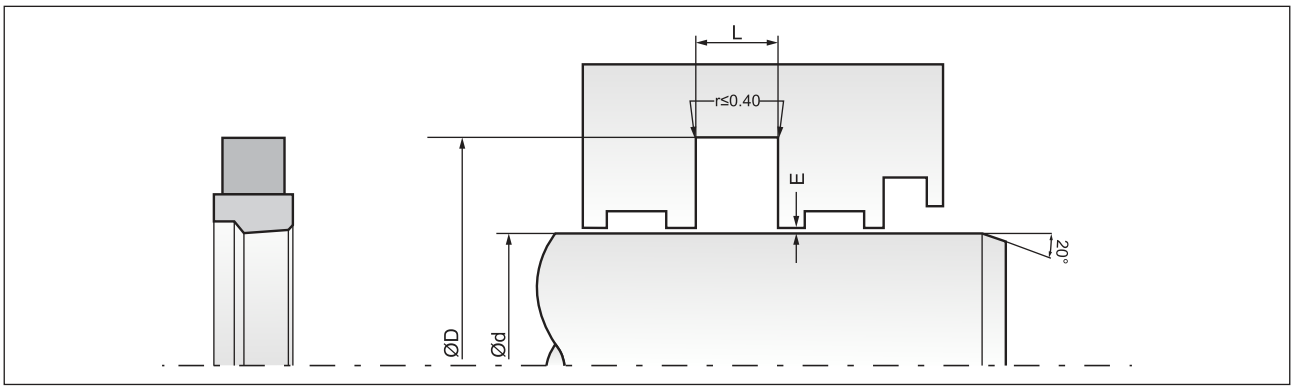

Part No.	d (h11)	D (H11)	L (+0.2)	Material	Mould No.
S16012D501	12.00	19.30	3.20	HNBR/BFT	FRA-974
S160147001	14.00	21.50	3.20	NBR/BFT	CS-1225
S160286401	28.00	36.00	8.00	FKM/BFT	FRA-3018
S160280901	28.00	39.00	4.20	NBR/BFT	RTC-127
S160287001	28.00	39.00	4.20	NBR/BFT	CS-1226
S160366401	36.00	44.50	7.00	FKM/BFT	RTC-106
S160366401	36.00	44.50	7.00	FKM/BFT	FRA-3500
S160366402	36.00	46.70	4.20	FKM/BFT	RTC-114
S16036E302	36.00	46.70	4.20	CNT+BFT	RTC-112
S160366402	40.40	47.20	3.40	FKM/BFT	CS-1698
S160426401	42.54	55.88	5.00	FKM/BFT	RTC-157
S160426401	42.54	55.88	5.00	FKM/BFT	FRA-2988
S160456403	45.00	52.20	3.30	FKM/BFT	CS-2901
S160456402	45.00	55.00	9.00	FKM/BFT	FRA-3021
S160450801	45.00	60.00	7.00	NBR/BFT	RTC-159
S160457002	45.00	60.20	8.00	NBR/BFT	RTC-113
S160477001	47.40	54.90	3.16	NBR/BFT	CS-1905
S160456401	48.80	55.10	6.40	FKM/BFT	FRA-2982
S160506401	50.00	65.00	7.00	FKM/BFT	CS-1959
S160526401	52.70	66.04	6.30	FKM/BFT	RTC-158
S160526401	52.70	66.04	6.30	FKM/BFT	FRA-2989
S160550901	55.00	63.00	4.20	NBR/BFT	FRA-1385
S16055E302	55.00	70.10	6.30	CNT+BFT	RTC-110
S160566401	56.00	64.30	5.50	FKM/BFT	CS-1967
S160576401	57.00	72.10	6.30	FKM/BFT	RTC-122
S160576401	63.00	73.00	5.40	FKM/BFT	CS-1802
S160636401	63.00	73.00	8.00	FKM/BFT	FRA-2990
S160630901	63.50	74.20	4.20	NBR/BFT	FRA-1494
S160707002	70.00	81.30	7.50	FKM/BFT	RTC-174

Part No.	d (h11)	D (H11)	L (+0.2)	Material	Mould No.
S160700901	70.00	82.00	6.30	NBR/BFT	RTC-107
S160700901	70.00	82.00	6.30	NBR/BFT	FRA-1262
S160850901	85.00	105.00	10.00	NBR/GLT	FRB-489
S160906401	90.00	105.00	12.00	FKM/BFT	RTC-101
S160906401	96.00	106.00	10.00	FKM/BFT	FRB-977
S161000902	100.00	110.70	4.20	NBR+PU	CS-1789
S161000901	100.00	120.00	10.00	NBR/PU	CS-1455
S161006401	100.00	120.00	10.00	FKM/BFT	RTC-115
S161006401	100.00	120.00	10.00	FKM/BFT	CS-1704
S161107001	110.00	130.00	9.50	FKM/BFT	RTC-102
S161106401	110.00	130.00	12.50	FKM/BFT	RTC-175
S161286401	128.80	139.70	8.20	FKM/BFT	RTC-149
S161456401	145.85	156.70	8.35	FKM/BFT	RTC-150
S161506601	150.00	167.00	8.00	FKM/BFT	FRB-120
S161507001	150.00	170.00	9.40	CNT+BFT	RTC-111
S161500902	150.00	170.00	10.00	NBR/BFT	RTC-163
S161506401	150.00	170.00	10.00	FKM/BFT	RTC-117
S161800901	180.00	200.00	10.00	NBR/PU	CS-1619
S163006601	300.00	322.50	9.50	FKM/BFT	FRD-118
S163200901	320.00	350.00	15.00	NBR/GLT	FRD-140
S164187001	418.64	444.24	12.70	NBR/BFT	CS-1215
S164907001	490.00	518.00	9.50	NBR/BFT	CS-960
S165007001	500.00	524.00	8.10	NBR/BFT	CS-1488
S165800901	580.00	615.00	17.50	NBR/GLT	FRE-150
S166007001	600.00	635.00	17.50	CNT+BFT	RTC-104
S166350801	635.00	670.31	12.70	NBR/BFT	RTC-124
S169350901	935.00	975.00	20.00	NBR/BFT	RTC-140
S169350901	935.00	975.00	20.00	NBR/BFT	CS-1975
S169996001	1270.00	1308.00	13.80	NBR/PU	SLO-417

Bold sizes are readily available in stock.
Other materials are available on request.

S59

Single Acting Rod Vee Pack

DETAILS

S59 is a single-acting robust seal. Though it is suitable for a split piston, it is extremely suitable for medium-duty to heavy-duty application. The S59 seal accepts low & high pressure, vigorous conditions & also any misalignment between sealing gaps. The seal is a combination of a bottom seal, center ring & pressure ring. The center ring is the main seal being flexible enough to retain high & low pressures. The bottom seal supports the center ring from getting extruded against high pressures. The top ring helps in retaining the center ring profile & distributing pressure equally. In many cases, the S59 seals can also be split to enable ease of fitment. Besides, S60 (1+5+1) is available with 2 extra center rings to adjust groove height.

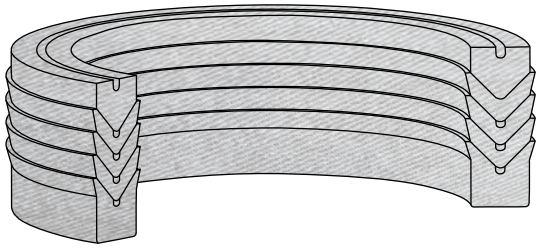

COMPATIBILITY

Mineral oils, bio oils, water soluble & water glycol fluids

MATERIAL

Nitrile Rubber with Fabric reinforcement 75/80 Shore 'A'

APPLICATION

Medium to heavy duty single acting cylinder with split piston.

OPERATING CONDITIONS

Temperature Range	:	-20°C to + 100°C
Pressure	:	400 Bar
Speed	:	0.5 m/s

FEATURES

- Long life.
- Accepts misalignment and uneven surfaces.
- Any size endless up to 1500 mm diameter available.

SURFACE ROUGHNESS

Static	:	1.6 µmRa
Dynamic	:	0.4 µmRa

S59

Single Acting Rod Vee Pack

MAX SPARE LIMITED
QUALITY. PRECISION. SPEED.

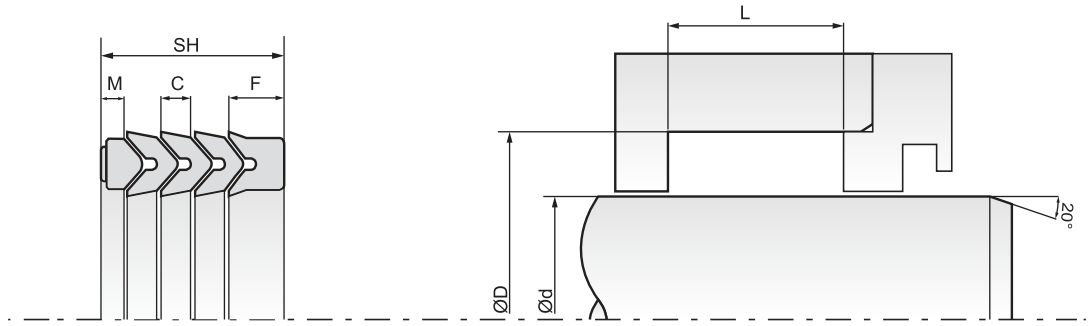

Part No.	d (h9)	D (H9)	SH (Stack Ht.)	F	C	M	Material	Mould No.
S590067801	6.35	22.22	24.00	8.00	4.00	4.00	PU	PPA-3072
S590068501	6.35	22.22	27.69	9.22	4.61	4.61	FKM/FABRIC	SAT-314
S590068301	6.35	22.22	29.08	9.68	4.84	4.84	NBR/FABRIC	SAT-2684
S590088301	8.00	18.00	20.00	6.66	3.33	3.33	NBR/FABRIC	SAT-2421
S590088303	8.00	25.00	25.00	8.32	4.16	4.16	NBR/FABRIC	SAT-2429
S590108303	10.00	18.00	10.00	3.20	1.60	1.60	NBR/FABRIC	SAT-3058
S590108408	10.00	20.00	23.00	7.66	3.83	3.83	NBR/FABRIC	SAT-4070
S590108302	10.00	22.00	18.00	6.00	3.00	3.00	NBR/FABRIC	SAT-2771
S590108301	10.00	25.70	20.00	6.66	3.33	3.33	NBR/FABRIC	SAT-1897
S590128305	12.00	22.00	14.32	4.76	2.38	2.38	NBR/FABRIC	SAT-533
S59012F301	12.00	22.00	20.00	6.66	3.33	3.33	KEVLAR-FABRIC	SAT-4295
S590128311	12.00	24.00	18.00	6.00	3.00	3.00	NBR/FABRIC	SAT-2656
S590128306	12.00	27.00	27.00	9.00	4.50	4.50	NBR/FABRIC	SAT-1486
S590128309	12.70	22.23	15.08	5.00	2.50	2.50	NBR/FABRIC	SAT-2109
S59012N101	12.70	23.01	19.05	6.34	3.17	3.17	FKM/FABRIC	SAT-2769
S59012N101	12.70	23.01	19.05	6.34	3.17	3.17	NBR	PPA-1800
S590128314	12.70	25.40	17.46	5.80	2.90	2.90	NBR+NY	SAT-3827
S590128312	12.70	25.40	19.05	6.34	3.17	3.17	NBR/FABRIC	SAT-3206
S590138301	13.60	27.00	27.00	9.00	4.50	4.50	NBR/FABRIC	SAT-1487
S590147801	14.28	22.22	24.00	8.00	4.00	4.00	PU	PPA-3071
S590158501	15.00	28.00	24.00	8.00	4.00	4.00	NBR/FABRIC	SAT-3478
S590158307	15.00	30.00	24.00	8.00	4.00	4.00	NBR/FABRIC	SAT-3739
S590158301	15.87	22.22	14.28	4.76	2.38	2.38	NBR/FABRIC	SAT-2281
S590152102	15.87	25.40	20.00	6.66	3.33	3.33	NBR/FABRIC	SAT-1840
S590158306	15.87	28.57	18.16	6.00	3.00	3.00	NBR/FABRIC	SAT-1781
S590168308	16.00	24.00	16.50	5.50	2.75	2.75	NBR/FABRIC	SAT-2554
S590163201	16.00	25.00	16.00	5.32	2.66	2.66	EPDM/FABRIC	SAT-3823
S590168311	16.00	28.00	14.00	4.66	2.33	2.33	NBR/FABRIC	SAT-467
S590166902	16.00	28.00	18.00	6.00	3.00	3.00	PTFE	PPA-1549
S590168306	16.00	28.00	20.00	6.66	3.33	3.33	NBR/FABRIC	SAT-2734
S590168301	16.00	29.00	14.32	4.76	2.38	2.38	NBR/FABRIC	SAT-227
S590168310	16.00	35.00	30.00	10.00	5.00	5.00	NBR/FABRIC	SAT-3129
S590178302	17.00	29.00	30.00	10.00	5.00	5.00	NBR/FABRIC	SAT-4172
S590178301	17.00	29.00	42.00	14.00	7.00	7.00	NBR/FABRIC	SAT-2072
S590188303	**18.00**	**28.00**	**19.86**	**6.60**	**3.30**	**3.30**	**NBR/FABRIC**	**SAT-2861**
S59018L501	18.00	30.00	17.15	5.70	2.85	2.85	PU	PPA-2366
S590191001	19.00	32.50	17.00	5.66	2.83	2.83	NBR/FABRIC	SAT-971
S590198318	19.00	32.50	17.00	5.66	2.83	2.83	NBR/FABRIC	SAT-3738
S590191201	19.05	31.75	17.45	5.80	2.90	2.90	NBR/FABRIC	SAT-2053
S590198314	19.05	31.75	25.40	8.46	4.23	4.23	NBR/FABRIC	SAT-1829
S590208601	20.00	28.00	14.50	4.82	2.41	2.41	FKM/FABRIC	SAT-4144
S590208308	20.00	30.00	16.00	5.32	2.66	2.66	NBR/FABRIC	SAT-3250
S590208502	20.00	30.00	18.50	6.20	3.10	3.10	FKM/FABRIC	SAT-555
S590208301	20.00	30.00	21.50	7.16	3.58	3.58	NBR/FABRIC	SAT-945
S590208319	20.00	31.50	17.50	5.82	2.91	2.91	NBR/FABRIC	SAT-221
S590208306	**20.00**	**32.00**	**16.86**	**5.62**	**2.81**	**2.81**	**NBR/FABRIC**	**SAT-2862**
S590208318	20.00	32.00	19.00	6.32	3.16	3.16	NBR/FABRIC	SAT-2130
S590208326	20.00	32.00	19.00	6.32	3.16	3.16	NBR/FABRIC	SAT-3954
S590201101	20.00	32.00	20.00	6.66	3.33	3.33	NBR/FABRIC	SAT-3352
S590208314	20.00	32.00	39.00	13.00	6.50	6.50	NBR/FABRIC	SAT-1489
S590208315	20.00	32.90	18.00	6.00	3.00	3.00	NBR/FABRIC	SAT-1678
S590208304	20.00	33.00	14.32	4.76	2.38	2.38	NBR/FABRIC	SAT-1260

Vee pack height can be adjusted by increasing or reducing the numbers of centre rings (C). This calculation can be done by the height of 'C' shown in the table.

Bold sizes are readily available in stock.

Other materials are available on request.

S59

Single Acting Rod Vee Pack

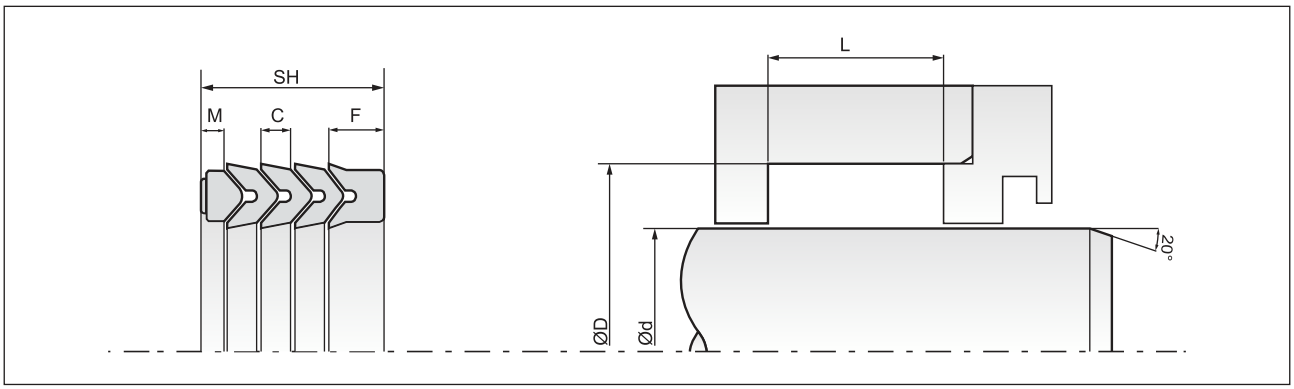

Part No.	d (h9)	D (H9)	SH (Stack Ht.)	F	C	M	Material	Mould No.
S590208501	20.00	33.00	23.00	7.66	3.83	3.83	FKM/FABRIC	SAT-3060
S590208316	20.00	35.00	24.00	8.00	4.00	4.00	NBR/FABRIC	SAT-1853
S590208320	20.00	36.00	24.00	8.00	4.00	4.00	NBR/FABRIC	SAT-223
S590208307	20.00	38.00	15.00	5.00	2.50	2.50	NBR/FABRIC	SAT-1298
S590208322	20.00	38.00	27.00	9.00	4.50	4.50	NBR/FABRIC	SAT-3278
S590200601	20.00	40.00	20.00	6.66	3.33	3.33	NBR/FABRIC	SAT-3899
S590228327	22.00	30.00	14.50	4.82	2.41	2.41	NBR/FABRIC	SAT-1261
S590228338	22.00	30.00	16.50	5.50	2.75	2.75	NBR/FABRIC	SAT-3421
S590228503	22.00	32.00	14.50	4.82	2.41	2.41	FKM/FABRIC	SAT-2643
S59022K101	22.00	32.00	19.00	6.32	3.16	3.16	NYLON	SAT-260
S59022K101	22.00	32.00	19.00	6.32	3.16	3.16	NYLON	SAT-1325
S590228334	22.00	32.00	26.00	8.66	4.33	4.33	NBR/FABRIC	SAT-2517
S590221001	22.00	32.50	17.00	5.66	2.83	2.83	NBR/FABRIC	SAT-972
S590228336	22.00	38.00	23.00	7.66	3.83	3.83	NBR/FABRIC	SAT-2863
S590228301	**22.00**	**38.00**	**26.00**	**8.66**	**4.33**	**4.33**	**NBR/FABRIC**	**SAT-1541**
S590228322	22.00	40.00	23.00	7.66	3.83	3.83	NBR	SAT-392
S590228335	22.00	40.00	25.00	8.32	4.16	4.16	NBR/FABRIC	SAT-3089
S590228340	22.00	40.00	30.00	10.00	5.00	5.00	NBR/FABRIC	SAT-3642
S590228331	22.00	41.50	26.00	8.66	4.33	4.33	NBR/FABRIC	SAT-1773
S590228337	22.00	45.00	21.00	7.00	3.50	3.50	NBR/FABRIC	SAT-3326
S590228324	22.22	31.75	18.03	6.00	3.00	3.00	NBR/FABRIC	SAT-1221
S590228333	22.22	31.75	20.64	6.88	3.44	3.44	NBR/FABRIC	SAT-2149
S59022M101	22.22	34.92	18.20	6.00	3.00	3.00	HNBR/FABRIC	SAT-2682
S59022L501	22.22	38.10	15.26	5.08	2.54	2.54	PU	PPA-2368
S590221101	22.35	35.05	20.30	6.76	3.38	3.38	NBR/FABRIC	SAT-3719
S590238301	23.00	38.00	21.00	7.00	3.50	3.50	NBR/FABRIC	SAT-4280
S590258503	25.00	35.00	16.50	5.50	2.75	2.75	FKM/FABRIC	SAT-2403
S590258345	25.00	35.00	17.30	5.76	2.88	2.88	NBR/FABRIC	SAT-1850
S590258338	25.00	35.00	20.00	6.66	3.33	3.33	NBR/FABRIC	SAT-1488
S590258319	25.00	35.00	23.00	7.66	3.83	3.83	NBR/FABRIC	SAT-1478
S590256007	25.00	35.00	30.00	10.00	5.00	5.00	NYLON	PPA-2360
S590258341	25.00	36.00	20.00	6.66	3.33	3.33	NBR/FABRIC	SAT-1730
S590258364	25.00	37.00	16.50	5.50	2.75	2.75	NBR/FABRIC	SAT-780
S590258315	25.00	38.00	17.50	5.82	2.91	2.91	NBR/FABRIC	SAT-1340
S590258367	25.00	38.00	20.00	6.66	3.33	3.33	NBR/FABRIC	SAT-1635
S590258353	25.00	38.00	35.00	11.66	5.83	5.83	NBR/FABRIC	SAT-2352
S590258357	25.00	39.00	28.00	9.32	4.66	4.66	NBR/FABRIC	SAT-2591
S590258502	25.00	40.00	17.00	5.66	2.83	2.83	FKM/FABRIC	SAT-2020
S590258302	25.00	40.00	19.84	6.60	3.30	3.30	NBR/FABRIC	SAT-1534
S590258302	25.00	40.00	19.84	6.60	3.30	3.30	NBR/FABRIC	SAT-239
S590258306	**25.00**	**40.00**	**25.50**	**8.50**	**4.25**	**4.25**	**NBR/FABRIC**	**SAT-2864**
S590258306	25.00	40.00	26.00	8.66	4.33	4.33	NBR/FABRIC	SAT-1526
S590258305	25.00	41.00	27.00	9.00	4.50	4.50	NBR/FABRIC	SAT-1390
S590258372	25.00	45.00	18.00	6.00	3.00	3.00	NBR/FABRIC	SAT-4380
S590258368	25.00	45.00	30.00	10.00	5.00	5.00	NBR/FABRIC	SAT-3828
S590258359	25.40	38.10	16.00	5.32	2.66	2.66	NBR/FABRIC	SAT-2954
S590258342	25.40	38.10	19.03	6.34	3.17	3.17	NBR/FABRIC	SAT-470
S590258348	25.40	38.10	19.60	6.52	3.26	3.26	NBR/FABRIC	SAT-1929
S59025L501	25.40	38.10	25.00	8.32	4.16	4.16	PU	PPA-1675
S590250801	25.40	38.10	34.00	11.32	5.66	5.66	NBR	SAT-3837
S590258370	25.40	38.20	24.50	8.16	4.08	4.08	NBR/FABRIC	SAT-3950
S590258360	25.40	38.50	15.00	5.00	2.50	2.50	NBR/FABRIC	SAT-2956

Vee pack height can be adjusted by increasing or reducing the numbers of centre rings (C). This calculation can be done by the height of 'C' shown in the table.
Bold sizes are readily available in stock.

Other materials are available on request.

S59

Single Acting Rod Vee Pack

MAX SPARE LIMITED
QUALITY. PRECISION. SPEED.

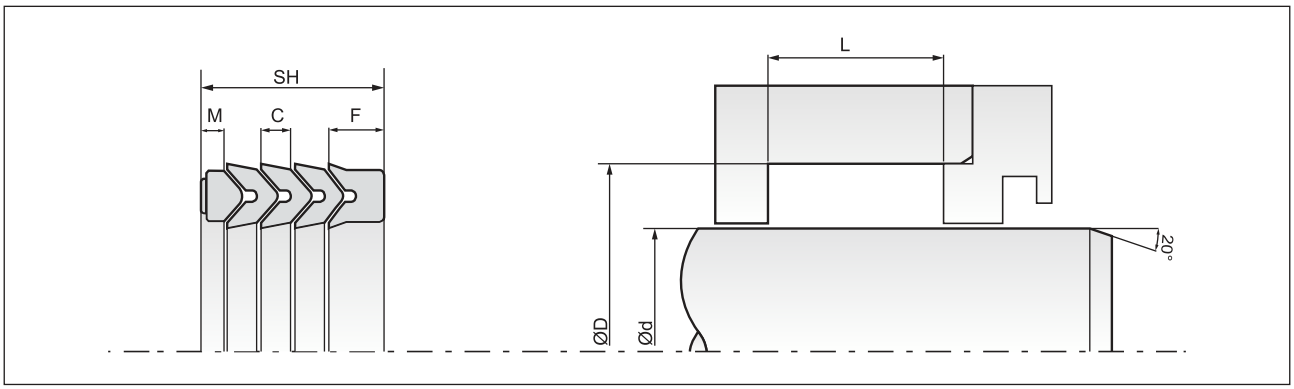

Part No.	d (h9)	D (H9)	SH (Stack Ht.)	F	C	M	Material	Mould No.
S590258346	25.50	38.00	18.00	6.00	3.00	3.00	NBR/FABRIC	SAT-1910
S590268301	26.00	45.00	29.37	9.78	4.89	4.89	NBR/FABRIC	SAT-217
S590268304	26.48	41.48	25.50	8.50	4.25	4.25	NBR/FABRIC	SAT-3330
S590268306	26.89	39.68	19.05	6.34	3.17	3.17	NBR/FABRIC	SAT-2778
S590268303	26.97	39.67	16.30	5.42	2.71	2.71	NBR/FABRIC	SAT-1359
S590268303	26.97	39.67	16.30	5.42	2.71	2.71	NBR/FABRIC	SAT-1454
S590278302	27.00	39.00	20.00	6.66	3.33	3.33	NBR/FABRIC	SAT-3315
S590278301	27.00	47.62	29.37	9.78	4.89	4.89	NBR/FABRIC	SAT-1245
S590288337	28.00	38.00	16.00	5.32	2.66	2.66	NBR/FABRIC	SAT-451
S590288323	28.00	38.00	22.00	7.32	3.66	3.66	FKM/FABRIC	SAT-793
S590288301	**28.00**	**40.00**	**16.98**	**5.66**	**2.83**	**2.83**	**NBR/FABRIC**	**SAT-2865**
S590288340	28.00	40.00	18.50	6.20	3.10	3.10	NBR/FABRIC	SAT-2938
S590288335	28.00	40.00	24.00	8.00	4.00	4.00	NBR/FABRIC	SAT-2406
S590288331	28.00	40.00	38.00	12.66	6.33	6.33	NBR/FABRIC	SAT-2008
S590288302	**28.00**	**43.00**	**22.50**	**7.50**	**3.75**	**3.75**	**NBR/FABRIC**	**SAT-2866**
S590288502	28.00	43.00	24.00	8.00	4.00	4.00	FKM/FABRIC	SAT-2021
S590288505	28.00	44.00	28.00	9.32	4.66	4.66	FKM/FABRIC	SAT-3362
S590288333	28.00	44.00	29.00	9.66	4.83	4.83	NBR/FABRIC	SAT-2293
S590288341	28.00	45.00	24.00	8.00	4.00	4.00	NBR/FABRIC	SAT-3085
S590288334	28.00	48.00	26.50	8.82	4.41	4.41	NBR/FABRIC	SAT-2327
S590288327	28.00	48.00	29.00	9.66	4.83	4.83	NBR/FABRIC	SAT-1246
S590288325	28.00	53.80	38.70	12.90	6.45	6.45	NBR/FABRIC	SAT-2922
S590288339	28.00	55.00	30.00	10.00	5.00	5.00	NBR/FABRIC	SAT-2915
S590288332	28.50	41.60	30.00	10.00	5.00	5.00	NBR/FABRIC	SAT-2049
S590288338	28.57	34.92	15.87	5.28	2.64	2.64	NBR/FABRIC	SAT-2738
S590281001	28.57	34.92	19.05	6.34	3.17	3.17	NBR	SAT-2625
S590288329	28.57	41.27	19.84	6.60	3.30	3.30	NBR/FABRIC	SAT-1503
S590288330	28.57	41.27	23.01	7.66	3.83	3.83	NBR/FABRIC	SAT-1791
S590288345	28.57	47.62	31.75	10.58	5.29	5.29	NBR/FABRIC	SAT-3798
S590291001	29.97	38.48	14.60	4.86	2.43	2.43	NBR	SAT-3154
S59030L503	30.00	40.00	18.00	6.00	3.00	3.00	PU	PPA-3369
S590308501	30.00	40.00	21.00	7.00	3.50	3.50	FKM/FABRIC	SAT-2759
S590308304	**30.00**	**40.00**	**21.78**	**7.26**	**3.63**	**3.63**	**NBR/FABRIC**	**SAT-2867**
S590308320	30.00	40.00	26.00	8.66	4.33	4.33	NBR/FABRIC	SAT-2457
S590308502	**30.00**	**40.00**	**29.06**	**9.68**	**4.84**	**4.84**	**FKM/FABRIC**	**SAT-872**
S590308325	30.00	42.00	18.00	6.00	3.00	3.00	NBR/FABRIC	SAT-3130
S590308318	30.00	42.00	21.80	7.26	3.63	3.63	NBR/FABRIC	SAT-2206
S590308316	30.00	43.00	20.00	6.66	3.33	3.33	NBR/FABRIC	SAT-2069
S590308312	30.00	45.00	20.00	6.66	3.33	3.33	NBR/FABRIC	SAT-768
S590307802	30.00	45.00	20.00	6.66	3.33	3.33	NBR/FABRIC	PPA-1092
S590308302	**30.00**	**45.00**	**22.20**	**7.40**	**3.70**	**3.70**	**NBR/FABRIC**	**SAT-2868**
S590308314	30.00	45.00	23.00	7.66	3.83	3.83	NBR/FABRIC	SAT-1339
S590307801	30.00	45.00	23.00	7.66	3.83	3.83	CAL+PU-5	PPA-1089
S590308319	30.00	45.00	25.00	8.32	4.16	4.16	NBR/FABRIC	SAT-317
S590308328	30.00	45.00	27.00	9.00	4.50	4.50	NBR/FABRIC	SAT-3280
S59030K201	30.00	45.00	30.00	10.00	5.00	5.00	CNY+PU-1	PPA-384
S590308324	30.00	47.00	32.00	10.66	5.33	5.33	NBR/FABRIC	SAT-3105
S590308326	30.00	50.00	28.80	9.60	4.80	4.80	NBR	SAT-3139
S590308303	**30.00**	**50.00**	**29.34**	**9.78**	**4.89**	**4.89**	**NBR/FABRIC**	**SAT-2869**
S590308315	30.00	50.00	29.37	9.78	4.89	4.89	NBR/FABRIC	SAT-1856
S590308321	30.00	50.00	32.00	10.66	5.33	5.33	NBR/FABRIC	SAT-2770
S590308329	30.00	52.00	40.00	13.32	6.66	6.66	NBR/FABRIC	SAT-3343

Vee pack height can be adjusted by increasing or reducing the numbers of centre rings (C). This calculation can be done by the height of 'C' shown in the table.

Bold sizes are readily available in stock.

Other materials are available on request.

S59

Single Acting Rod Vee Pack

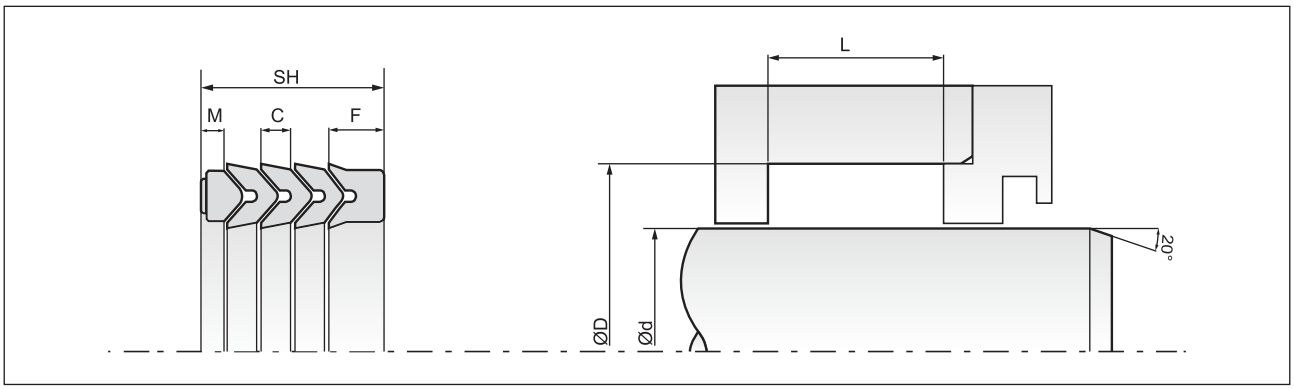

Part No.	d (h9)	D (H9)	SH (Stack Ht.)	F	C	M	Material	Mould No.
S590308330	30.00	55.00	25.00	8.32	4.16	4.16	NBR/FABRIC	SAT-3730
S590308327	30.00	62.00	25.00	8.32	4.16	4.16	NBR/FABRIC	SAT-3146
S590318401	31.00	44.00	25.00	8.32	4.16	4.16	NBR/FABRIC	SAT-3942
S590318318	31.50	44.20	22.00	7.32	3.66	3.66	NBR/FABRIC	SAT-3249
S590318319	31.50	44.50	20.00	6.66	3.33	3.33	NBR/FABRIC	SAT-3549
S590318317	31.75	44.45	16.00	5.32	2.66	2.66	NBR/FABRIC	SAT-3239
S590318312	31.75	44.45	16.84	5.60	2.80	2.80	NBR/FABRIC	SAT-1704
S590317802	31.75	44.45	17.27	5.74	2.87	2.87	NBR	PPA-1529
S59031K101	31.75	44.45	18.70	6.20	3.10	3.10	NYLON	PPA-1180
S590318301	**31.75**	**44.45**	**19.02**	**6.34**	**3.17**	**3.17**	**NBR/FABRIC**	**SAT-2870**
S590317801	31.75	44.45	19.30	6.40	3.20	3.20	NBR	PPA-1521
S590328501	32.00	40.00	24.00	8.00	4.00	4.00	FKM/FABRIC	SAT-3117
S590328312	32.00	42.00	20.00	6.66	3.33	3.33	NBR/FABRIC	SAT-2604
S590328313	32.00	44.00	16.50	5.50	2.75	2.75	NBR/FABRIC	SAT-2619
S59032L501	32.00	44.45	25.00	8.32	4.16	4.16	PU	PPA-1676
S590328307	32.00	44.50	30.00	10.00	5.00	5.00	NBR/FABRIC	SAT-1490
S590328315	32.00	45.00	25.00	8.32	4.16	4.16	NBR/FABRIC	SAT-3078
S590328314	32.00	46.00	24.00	8.00	4.00	4.00	NBR/FABRIC	SAT-2652
S590328308	32.00	52.00	40.00	13.32	6.66	6.66	NBR/FABRIC	SAT-1568
S590338304	33.32	50.80	24.89	8.28	4.14	4.14	NBR/FABRIC	SAT-1455
S590338304	33.32	50.80	24.89	8.28	4.14	4.14	NBR/FABRIC	SAT-1358
S590338302	33.34	46.04	17.46	5.80	2.90	2.90	NBR/FABRIC	SAT-1248
S590338303	33.34	49.21	25.00	8.32	4.16	4.16	NBR/FABRIC	SAT-1249
S590348601	34.00	46.00	25.00	8.32	4.16	4.16	FKM/FABRIC	SAT-4185
S590348316	34.00	46.00	38.00	12.66	6.33	6.33	NBR/FABRIC	SAT-2018
S590348318	34.00	50.00	32.00	10.66	5.33	5.33	NBR/FABRIC	SAT-3037
S590348501	34.00	50.80	43.00	14.32	7.16	7.16	FKM/FABRIC	SAT-1282
S590348402	34.00	58.00	22.00	7.32	3.66	3.66	NBR/FABRIC	SAT-4258
S59034L501	34.00	58.00	22.50	7.50	3.75	3.75	PU	PPA-1091
S590348322	34.00	58.00	24.00	8.00	4.00	4.00	NBR/FABRIC	SAT-3173
S590341102	34.00	58.00	28.00	9.32	4.66	4.66	NBR/FABRIC	SAT-3414
S590348319	34.80	50.80	19.00	6.32	3.16	3.16	NBR/FABRIC	SAT-3099
S590348317	34.90	47.50	15.00	5.00	2.50	2.50	NBR/FABRIC	SAT-2946
S590348302	34.90	50.80	24.18	8.00	4.00	4.00	NBR/FABRIC	SAT-2871
S590348323	34.92	44.45	19.05	6.34	3.17	3.17	NBR/FABRIC	SAT-3347
S590348324	34.92	47.62	19.05	6.34	3.17	3.17	NBR/FABRIC	SAT-4026
S590348312	34.92	50.80	22.22	7.40	3.70	3.70	NBR/FABRIC	SAT-473
S590348401	34.92	50.80	24.13	8.00	4.00	4.00	NBR/FABRIC	SAT-4120
S590341101	34.92	50.80	24.13	8.00	4.00	4.00	NBR/FABRIC	SAT-2441
S590348311	34.92	50.80	24.13	8.00	4.00	4.00	NBR/FABRIC	SAT-1067
S590348502	34.92	50.80	25.40	8.46	4.23	4.23	FKM/FABRIC	SAT-2702
S59034L502	34.92	50.80	29.00	9.66	4.83	4.83	PU	PPA-1946
S590358501	35.00	45.00	14.20	4.72	2.36	2.36	FKM/FABRIC	SAT-2104
S590358316	35.00	45.00	18.00	6.00	3.00	3.00	NBR/FABRIC	SAT-2903
S590358318	35.00	45.00	22.50	7.50	3.75	3.75	NBR/FABRIC	SAT-308
S590358338	35.00	45.70	15.50	5.16	2.58	2.58	NBR/FABRIC	SAT-2953
S590358343	35.00	46.00	15.00	5.00	2.50	2.50	NBR/FABRIC	SAT-3469
S590358503	35.00	47.00	16.50	5.50	2.75	2.75	FKM/FABRIC	SAT-2813
S590358322	**35.00**	**47.00**	**17.10**	**5.70**	**2.85**	**2.85**	**NBR/FABRIC**	**SAT-2873**
S590358329	35.00	47.00	30.00	10.00	5.00	5.00	NBR/FABRIC	SAT-103
S590358336	35.00	47.50	17.00	5.66	2.83	2.83	NBR/FABRIC	SAT-2933
S590358323	35.00	48.00	20.00	6.66	3.33	3.33	NBR/FABRIC	SAT-1987

Vee pack height can be adjusted by increasing or reducing the numbers of centre rings (C). This calculation can be done by the height of 'C' shown in the table.
Bold sizes are readily available in stock.

Other materials are available on request.

S59

Single Acting Rod Vee Pack

MAX SPARE LIMITED
QUALITY. PRECISION. SPEED.

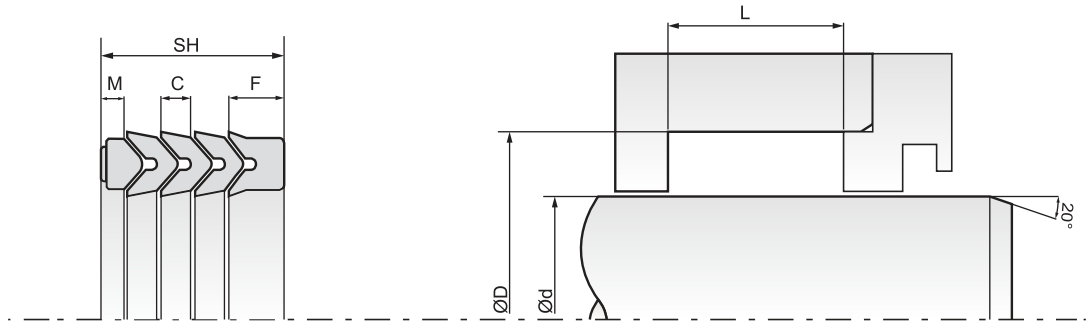

Part No.	d (h9)	D (H9)	SH (Stack Ht.)	F	C	M	Material	Mould No.
S590358302	35.00	49.00	28.50	9.50	4.75	4.75	NBR/FABRIC	SAT-2326
S590358341	35.00	50.00	17.30	5.76	2.88	2.88	NBR/FABRIC	SAT-1212
S590358306	35.00	50.00	20.00	6.66	3.33	3.33	NBR/FABRIC	SAT-329
S590358303	35.00	50.00	22.50	7.50	3.75	3.75	NBR/FABRIC	SAT-1274
S590358305	**35.00**	**50.00**	**24.72**	**8.24**	**4.12**	**4.12**	**NBR/FABRIC**	**SAT-2872**
S590358331	35.00	50.00	25.00	8.32	4.16	4.16	NBR/FABRIC	SAT-2521
S590358327	35.00	50.00	25.40	8.46	4.23	4.23	NBR/FABRIC	SAT-2853
S590351001	35.00	50.00	27.50	9.16	4.58	4.58	NBR/FABRIC	SAT-677
S59035L501	35.00	50.00	29.00	9.66	4.83	4.83	PU	PPA-2379
S590358332	35.00	50.00	29.00	9.66	4.83	4.83	NBR/FABRIC	SAT-2594
S590358339	35.00	51.00	28.00	9.32	4.66	4.66	NBR/FABRIC	SAT-2198
S590358342	35.00	52.00	40.00	13.32	6.66	6.66	NBR/FABRIC	SAT-3342
S590358322	35.00	55.00	25.00	8.32	4.16	4.16	NBR/FABRIC	SAT-1859
S590358333	35.00	55.00	27.00	9.00	4.50	4.50	NBR/FABRIC	SAT-644
S590358313	35.00	55.00	30.00	10.00	5.00	5.00	NBR/FABRIC	SAT-1648
S590358328	35.10	48.20	26.00	8.66	4.33	4.33	NBR/FABRIC	SAT-2363
S590358334	35.10	50.80	22.00	7.32	3.66	3.66	NBR/FABRIC	SAT-2760
S590361101	36.00	46.00	16.00	5.32	2.66	2.66	NBR/FABRIC	SAT-782
S590368318	36.00	46.00	16.80	5.60	2.80	2.80	FKM/FABRIC	SAT-1277
S590368323	36.00	46.00	38.00	12.66	6.33	6.33	NBR/FABRIC	SAT-2009
S590368512	36.00	47.00	16.00	5.32	2.66	2.66	FKM	SAT-3647
S590368402	36.00	48.00	15.00	5.00	2.50	2.50	NBR/FABRIC	SAT-2050
S590368305	**36.00**	**48.00**	**16.86**	**5.62**	**2.81**	**2.81**	**NBR/FABRIC**	**SAT-2876**
S590368326	36.00	48.00	20.00	6.66	3.33	3.33	NBR/FABRIC	SAT-2419
S590368336	36.00	48.00	23.00	7.66	3.83	3.83	NBR/FABRIC	SAT-3482
S590368315	36.00	50.00	20.00	6.66	3.33	3.33	NBR/FABRIC	SAT-2657
S590368303	**36.00**	**50.00**	**22.08**	**7.32**	**3.66**	**3.66**	**NBR/FABRIC**	**SAT-2875**
S590368319	36.00	50.00	23.00	7.66	3.83	3.83	NBR/FABRIC	SAT-3181
S590368328	36.00	50.00	25.50	8.50	4.25	4.25	NBR/FABRIC	SAT-2678
S59036L501	36.00	51.00	20.00	6.66	3.33	3.33	PU	PPA-1386
S590368321	36.00	51.00	21.30	7.10	3.55	3.55	NBR/FABRIC	SAT-721
S590368317	36.00	51.00	22.00	7.32	3.66	3.66	NBR/FABRIC	SAT-1269
S590368322	36.00	51.00	22.00	7.32	3.66	3.66	NBR/FABRIC	SAT-1857
S590368330	36.00	51.00	25.00	8.32	4.16	4.16	NBR/FABRIC	SAT-2740
S590368302	36.00	52.00	17.60	5.86	2.93	2.93	NBR/FABRIC	SAT-370
S590368301	36.00	56.00	30.00	10.00	5.00	5.00	NBR/FABRIC	SAT-3453
S590388314	38.00	50.00	20.00	6.66	3.33	3.33	NBR/FABRIC	SAT-787
S590388330	38.00	50.00	23.00	7.66	3.83	3.83	NBR/FABRIC	SAT-2278
S590388502	38.00	50.00	28.00	9.32	4.66	4.66	FKM/FABRIC	SAT-2616
S590388320	38.00	50.00	30.00	10.00	5.00	5.00	NBR/FABRIC	SAT-2133
S590388336	38.00	51.00	30.00	10.00	5.00	5.00	NBR/FABRIC	SAT-3076
S59038K501	38.00	53.00	23.00	7.66	3.83	3.83	NBR	SAT-2485
S590388343	38.00	54.00	38.00	12.66	6.33	6.33	NBR/FABRIC	SAT-4159
S590388332	38.00	56.00	30.00	10.00	5.00	5.00	NBR/FABRIC	SAT-2381
S590388338	38.00	63.00	24.00	8.00	4.00	4.00	NBR/FABRIC	SAT-299
S590388339	38.10	50.00	21.00	7.00	3.50	3.50	NBR/FABRIC	SAT-3389
S590388402	38.10	50.80	19.05	6.34	3.17	3.17	NBR	SAT-4216
S59038A601	38.10	50.80	19.05	6.34	3.17	3.17	NBR/FABRIC	SAT-4033
S590388302	**38.10**	**50.80**	**19.44**	**6.48**	**3.24**	**3.24**	**NBR/FABRIC**	**SAT-2877**
S590388401	38.10	50.80	20.32	6.76	3.38	3.38	NBR/FABRIC	SAT-4072
S590388315	38.10	50.80	20.72	6.90	3.45	3.45	NBR/FABRIC	SAT-3295
S590388307	38.10	50.80	22.86	7.62	3.81	3.81	NBR/FABRIC	SAT-3385

Vee pack height can be adjusted by increasing or reducing the numbers of centre rings (C). This calculation can be done by the height of 'C' shown in the table.

Bold sizes are readily available in stock.

Other materials are available on request.

S59

Single Acting Rod Vee Pack

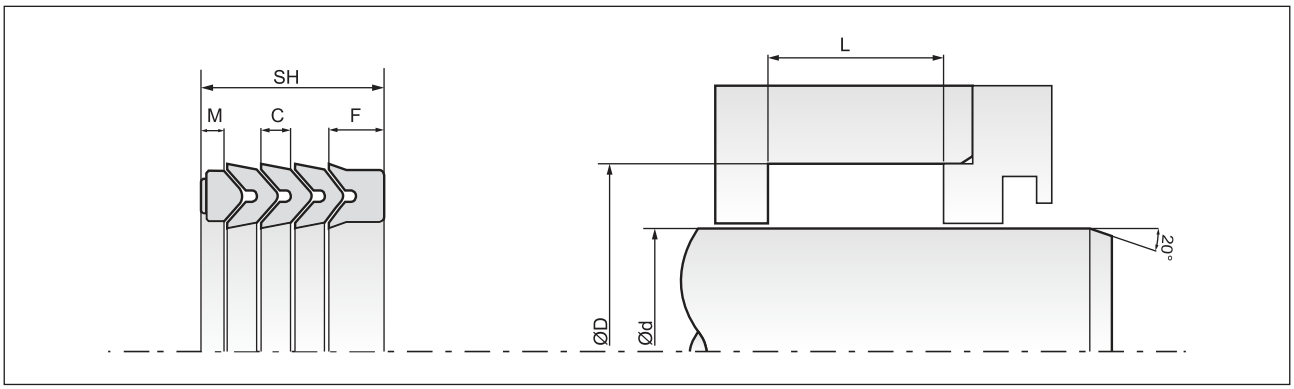

Part No.	d (h9)	D (H9)	SH (Stack Ht.)	F	C	M	Material	Mould No.
S590388337	38.10	50.80	26.00	8.66	4.33	4.33	NBR/FABRIC	SAT-3075
S590388311	38.10	51.00	16.00	5.32	2.66	2.66	NBR/FABRIC	SAT-4163
S590388341	38.10	53.85	27.38	9.12	4.56	4.56	NBR/FABRIC	SAT-3629
S590388323	38.10	53.97	23.57	7.84	3.92	3.92	NBR/FABRIC	SAT-1107
S590388329	38.10	53.98	27.78	9.26	4.63	4.63	NBR/FABRIC	SAT-1858
S590388306	38.10	57.15	31.75	10.58	5.29	5.29	NBR/FABRIC	SAT-2257
S590398301	39.00	50.00	22.80	7.60	3.80	3.80	NBR/FABRIC	SAT-2815
S590398302	39.00	56.00	25.00	8.32	4.16	4.16	NBR/FABRIC	SAT-3386
S590408601	40.00	50.00	16.00	5.32	2.66	2.66	FKM/FABRIC	SAT-4020
S590408510	40.00	50.00	17.30	5.76	2.88	2.88	FKM/FABRIC	SAT-3299
S590408323	**40.00**	**52.00**	**16.86**	**5.62**	**2.81**	**2.81**	**NBR/FABRIC**	**SAT-2881**
S590408312	40.00	52.00	17.30	5.76	2.88	2.88	NBR/FABRIC	SAT-1343
S590408602	40.00	52.00	22.50	7.50	3.75	3.75	FKM/FABRIC	SAT-4278
S590408353	40.00	52.00	27.00	9.00	4.50	4.50	NBR/FABRIC	SAT-3481
S590408511	40.00	52.00	28.00	9.32	4.66	4.66	FKM/FABRIC	SAT-3648
S590408352	40.00	54.00	22.50	7.50	3.75	3.75	NBR/FABRIC	SAT-1372
S590408302	40.00	55.00	22.50	7.50	3.75	3.75	NBR/FABRIC	SAT-2367
S590408303	**40.00**	**55.00**	**22.62**	**7.54**	**3.77**	**3.77**	**NBR/FABRIC**	**SAT-2878**
S59040L501	40.00	55.00	24.00	8.00	4.00	4.00	PU	PPA-2378
S590401001	40.00	55.00	25.00	8.32	4.16	4.16	NBR	SAT-1739
S590408301	40.00	55.00	26.19	8.72	4.36	4.36	NBR/FABRIC	SAT-1535
S59040L502	40.00	55.00	26.19	8.72	4.36	4.36	PU	PPA-2658
S590408403	40.00	55.00	28.50	9.50	4.75	4.75	NBR/FABRIC	SAT-4131
S590401101	40.00	55.00	40.00	13.32	6.66	6.66	NBR/FABRIC	SAT-1969
S590408304	**40.00**	**56.00**	**17.52**	**5.82**	**2.91**	**2.91**	**NBR/FABRIC**	**SAT-2879**
S590408334	40.00	56.00	23.50	7.82	3.91	3.91	NBR/FABRIC	SAT-1680
S590408507	40.00	56.00	25.00	8.32	4.16	4.16	FKM/FABRIC	SAT-2022
S590408407	40.00	56.00	26.00	8.66	4.33	4.33	NBR/FABRIC	SAT-4357
S590408310	40.00	56.00	27.40	9.12	4.56	4.56	NBR/FABRIC	SAT-3279
S590408336	40.00	56.00	28.00	9.32	4.66	4.66	NBR/FABRIC	SAT-1806
S590408314	40.00	60.00	17.30	5.76	2.88	2.88	NBR/FABRIC	SAT-422
S590408314	40.00	60.00	17.30	5.76	2.88	2.88	NBR/FABRIC	SAT-1536
S590408332	40.00	60.00	25.00	8.32	4.16	4.16	NBR/FABRIC	SAT-2745
S590408305	**40.00**	**60.00**	**30.00**	**10.00**	**5.00**	**5.00**	**NBR/FABRIC**	**SAT-2880**
S590408305	40.00	60.00	30.00	10.00	5.00	5.00	NBR/FABRIC	SAT-1538
S590408401	40.00	65.00	32.00	10.66	5.33	5.33	NBR/FABRIC	SAT-4018
S590408337	40.00	65.00	34.00	11.32	5.66	5.66	NBR/FABRIC	SAT-1823
S590408308	40.00	65.00	35.00	11.66	5.83	5.83	NBR/FABRIC	SAT-3502
S590408306	40.00	65.00	35.72	11.90	5.95	5.95	NBR/FABRIC	SAT-643
S590418303	41.27	53.98	19.05	6.34	3.17	3.17	NBR/FABRIC	SAT-1251
S590418305	41.28	57.15	25.40	8.46	4.23	4.23	NBR/FABRIC	SAT-3166
S590428301	42.00	57.00	22.00	7.32	3.66	3.66	NBR/FABRIC	SAT-298
S590428307	42.00	60.00	30.00	10.00	5.00	5.00	NBR/FABRIC	SAT-1512
S590438501	43.50	58.50	15.00	5.00	2.50	2.50	FKM/FABRIC	SAT-2572
S590448325	44.00	60.00	25.00	8.32	4.16	4.16	NBR/FABRIC	SAT-2548
S590448332	44.00	63.00	28.00	9.32	4.66	4.66	NBR/FABRIC	SAT-3285
S590448332	44.00	63.00	48.00	16.00	8.00	8.00	NBR/FABRIC	SAT-3282
S590448324	44.00	65.00	30.00	10.00	5.00	5.00	NBR/FABRIC	SAT-2537
S590448330	44.30	57.50	15.00	5.00	2.50	2.50	NBR/FABRIC	SAT-2976
S590448501	44.45	57.15	16.28	5.42	2.71	2.71	FKM/FABRIC	SAT-2124
S590448301	44.45	57.15	21.83	7.26	3.63	3.63	NBR/FABRIC	SAT-1344
S59044K102	44.45	57.15	24.38	8.12	4.06	4.06	NYLON	PPA-3250

Vee pack height can be adjusted by increasing or reducing the numbers of centre rings (C). This calculation can be done by the height of 'C' shown in the table.
Bold sizes are readily available in stock.

Other materials are available on request.

S59

Single Acting Rod Vee Pack

MAX SPARE LIMITED
QUALITY. PRECISION. SPEED.

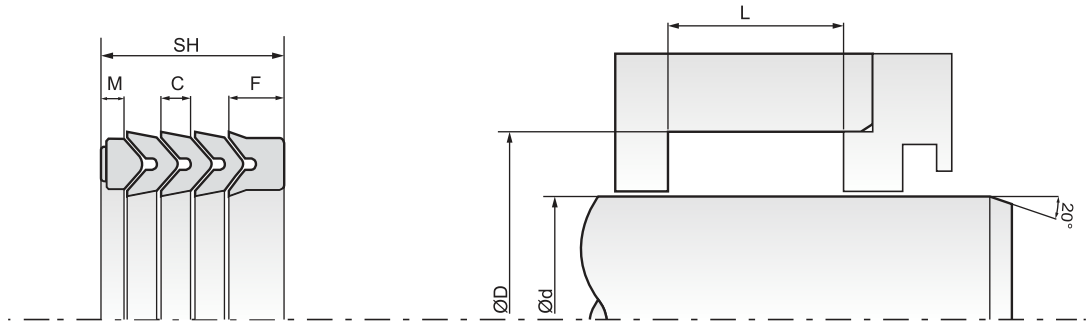

Part No.	d (h9)	D (H9)	SH (Stack Ht.)	F	C	M	Material	Mould No.
S59044K101	44.45	60.32	24.38	8.12	4.06	4.06	NYLON	PPA-2588
S590448317	44.45	60.32	25.40	8.46	4.23	4.23	NBR/FABRIC	SAT-1149
S590448328	44.45	60.32	27.80	9.26	4.63	4.63	NBR/FABRIC	SAT-2852
S590448328	44.45	60.32	27.80	9.26	4.63	4.63	NBR/FABRIC	SAT-515
S590441101	44.45	65.07	25.40	8.46	4.23	4.23	NBR/FABRIC	SAT-2079
S590448329	44.50	52.00	15.00	5.00	2.50	2.50	NBR/FABRIC	SAT-2951
S590448333	44.50	63.40	22.00	7.32	3.66	3.66	NBR/FABRIC	SAT-3452
S590458304	45.00	55.00	16.00	5.32	2.66	2.66	NBR/FABRIC	SAT-2296
S590458364	45.00	55.00	16.50	5.50	2.75	2.75	NBR/FABRIC	SAT-2555
S590458302	45.00	55.00	17.50	5.82	2.91	2.91	NBR/FABRIC	SAT-208
S590458372	45.00	57.00	15.00	5.00	2.50	2.50	NBR/FABRIC	SAT-2934
S590458351	45.00	57.00	25.00	8.32	4.16	4.16	NBR/FABRIC	SAT-2016
S590458343	45.00	57.00	32.00	10.66	5.33	5.33	NBR/FABRIC	SAT-1676
S590458352	45.00	58.00	25.00	8.32	4.16	4.16	NBR/FABRIC	SAT-2031
S590458520	45.00	58.00	37.00	12.32	6.16	6.16	FKM/FABRIC	SAT-2465
S590458317	45.00	60.00	22.22	7.40	3.70	3.70	NBR/FABRIC	SAT-1347
S590458301	**45.00**	**60.00**	**22.26**	**7.40**	**3.70**	**3.70**	**NBR/FABRIC**	**SAT-2882**
S590455902	45.00	60.00	22.50	7.50	3.75	3.75	PU	PPA-960
S590458384	45.00	60.00	22.50	7.50	3.75	3.75	NBR/FABRIC	SAT-3757
S59045L504	45.00	60.00	22.50	7.50	3.75	3.75	PU	PPA-3275
S590456401	45.00	60.00	24.70	8.20	4.10	4.10	FKM/FABRIC	SAT-4272
S590457801	45.00	60.00	25.00	8.32	4.16	4.16	PU	PPA-815
S590451002	45.00	60.00	30.00	10.00	5.00	5.00	NBR/FABRIC	SAT-2802
S590458370	45.00	61.00	27.00	9.00	4.50	4.50	NBR/FABRIC	SAT-127
S590458377	45.00	63.00	21.50	7.16	3.58	3.58	NBR/FABRIC	SAT-365
S590458310	45.00	63.00	30.00	10.00	5.00	5.00	NBR/FABRIC	SAT-364
S590458517	45.00	63.00	35.00	11.66	5.83	5.83	FKM/FABRIC	SAT-2071
S590458387	45.00	63.00	41.00	13.66	6.83	6.83	NBR/FABRIC	SAT-4199
S590458379	45.00	64.00	30.00	10.00	5.00	5.00	NBR/FABRIC	SAT-3276
S590458366	45.00	65.00	24.00	8.00	4.00	4.00	NBR/FABRIC	SAT-2688
S590458303	45.00	65.00	28.00	9.32	4.66	4.66	NBR/FABRIC	SAT-249
S590458348	45.00	65.00	28.00	9.32	4.66	4.66	NBR/FABRIC	SAT-1851
S59045L501	45.00	65.00	30.00	10.00	5.00	5.00	PU	PPA-2475
S590451001	45.00	66.00	22.50	7.50	3.75	3.75	NBR/FABRIC	SAT-970
S590450601	45.00	66.00	22.50	7.50	3.75	3.75	NBR/FABRIC	SAT-3283
S590458333	45.00	66.00	22.50	7.50	3.75	3.75	NBR/FABRIC	SAT-1170
S590458385	45.00	66.50	24.00	8.00	4.00	4.00	NBR/FABRIC	SAT-3968
S590478401	47.00	59.00	27.00	9.00	4.50	4.50	NBR/FABRIC	SAT-4355
S5904710001	47.00	63.00	25.00	8.32	4.16	4.16	NBR	SAT-3232
S590478309	47.00	64.00	30.00	10.00	5.00	5.00	NBR/FABRIC	SAT-3131
S590478307	47.11	57.15	38.10	12.70	6.35	6.35	NBR/FABRIC	SAT-2534
S590478301	47.62	63.50	19.05	6.34	3.17	3.17	NBR/FABRIC	SAT-3384
S590471201	47.62	63.50	23.50	7.82	3.91	3.91	NBR/FABRIC	SAT-1918
S590478308	47.63	63.50	38.10	12.70	6.35	6.35	NBR/FABRIC	SAT-2679
S590488308	48.00	60.00	30.00	10.00	5.00	5.00	NBR/FABRIC	SAT-228
S590488304	48.00	62.00	20.20	6.72	3.36	3.36	NBR/FABRIC	SAT-229
S590488307	48.00	63.00	13.00	4.32	2.16	2.16	NBR/FABRIC	SAT-3134
S590488306	**48.00**	**63.00**	**28.50**	**9.50**	**4.75**	**4.75**	**NBR/FABRIC**	**SAT-2883**
S590508341	50.00	60.00	16.00	5.32	2.66	2.66	FKM/FABRIC	SAT-650
S590506903	50.00	60.00	17.00	5.66	2.83	2.83	PTFE	SAT-2617
S590508392	50.00	60.00	18.00	6.00	3.00	3.00	NBR/FABRIC	SAT-3121
S590508606	50.00	60.00	20.00	6.66	3.33	3.33	FKM/FABRIC	SAT-4234

Vee pack height can be adjusted by increasing or reducing the numbers of centre rings (C). This calculation can be done by the height of 'C' shown in the table.

Bold sizes are readily available in stock.

Other materials are available on request.

S59

Single Acting Rod Vee Pack

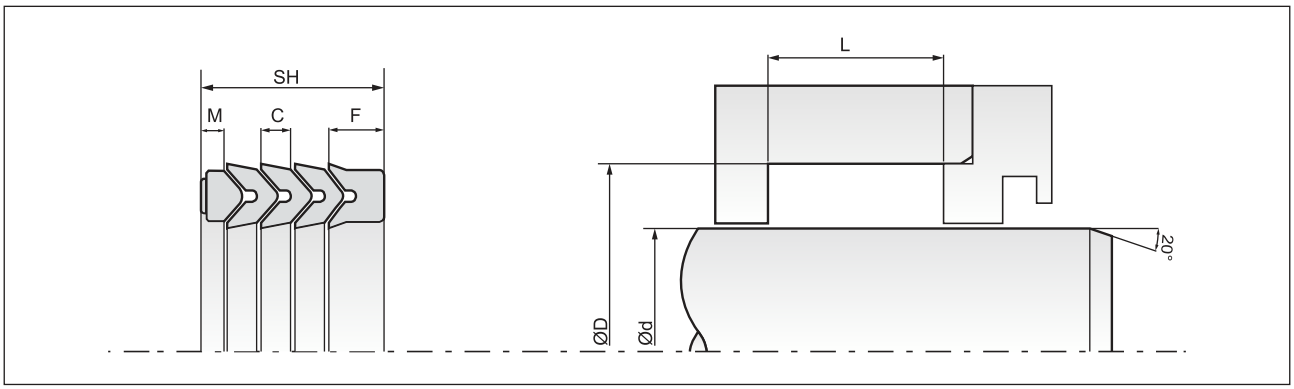

Part No.	d (h9)	D (H9)	SH (Stack Ht.)	F	C	M	Material	Mould No.
S590508351	50.00	60.00	25.00	8.32	4.16	4.16	NBR/FABRIC	SAT-1250
S590508385	50.00	63.00	18.80	6.20	3.10	3.10	NBR/FABRIC	SAT-2027
S590508368	50.00	63.00	24.00	8.00	4.00	4.00	NBR/FABRIC	SAT-2046
S590508405	50.00	63.00	32.00	10.66	5.33	5.33	NBR/FABRIC	SAT-4027
S5905083B4	50.00	63.50	19.00	6.32	3.16	3.16	NBR/FABRIC	SAT-4400
S590508376	50.00	64.00	22.00	7.32	3.66	3.66	NBR/FABRIC	SAT-2459
S5905083A3	50.00	64.50	22.00	7.32	3.66	3.66	NBR/FABRIC	SAT-3388
S590508398	50.00	65.00	18.00	6.00	3.00	3.00	NBR/FABRIC	SAT-1076
S59050L503	50.00	65.00	21.00	7.00	3.50	3.50	PU	PPA-2538
S590507801	50.00	65.00	24.60	8.20	4.10	4.10	PU	PPA-816
S590508604	50.00	65.00	25.00	8.32	4.16	4.16	NBR/FABRIC	SAT-4161
S590508306	**50.00**	**65.00**	**25.20**	**8.40**	**4.20**	**4.20**	**NBR/FABRIC**	**SAT-2886**
S590508327	50.00	65.00	25.50	8.50	4.25	4.25	NBR/FABRIC	SAT-1681
S590508313	50.00	65.00	27.00	9.00	4.50	4.50	NBR/FABRIC	SAT-3743
S590508408	50.00	65.00	30.00	10.00	5.00	5.00	NBR/FABRIC	SAT-4239
S590501003	50.00	65.00	32.00	10.66	5.33	5.33	NBR	SAT-3224
S590501001	50.00	65.00	32.00	10.66	5.33	5.33	NBR	SAT-2502
S590508326	50.00	65.00	34.80	11.60	5.80	5.80	NBR/FABRIC	SAT-991
S590508349	50.00	65.60	25.60	8.52	4.26	4.26	NBR/FABRIC	SAT-1164
S590508362	50.00	65.92	30.00	10.00	5.00	5.00	NBR/FABRIC	SAT-1679
S590508362	50.00	65.92	30.00	10.00	5.00	5.00	NBR/FABRIC	SAT-2567
S590508503	50.00	66.00	20.00	6.66	3.33	3.33	FKM/FABRIC	SAT-3398
S590508513	50.00	66.00	21.00	7.00	3.50	3.50	FKM	SAT-2510
S590508513	50.00	66.00	21.00	7.00	3.50	3.50	FKM	PPA-1468
S5905083A6	50.00	66.00	22.00	7.32	3.66	3.66	NBR/FABRIC	SAT-3441
S590508310	50.00	66.00	24.00	8.00	4.00	4.00	NBR/FABRIC	SAT-3151
S59050L501	50.00	66.00	25.00	8.32	4.16	4.16	PU	PPA-455
S59050L502	50.00	66.00	29.00	9.66	4.83	4.83	PU	PPA-457
S590508393	50.00	66.00	30.00	10.00	5.00	5.00	NBR/FABRIC	SAT-3137
S590508514	50.00	68.00	30.00	10.00	5.00	5.00	FKM/FABRIC	SAT-300
S590508355	50.00	69.60	30.00	10.00	5.00	5.00	NBR/FABRIC	SAT-1480
S590508515	50.00	70.00	22.00	7.32	3.66	3.66	FKM/FABRIC	SAT-2846
S590501002	50.00	70.00	22.50	7.50	3.75	3.75	NBR/FABRIC	SAT-2559
S590508507	50.00	70.00	29.90	9.96	4.98	4.98	FKM/FABRIC	SAT-2415
S590508304	50.00	70.00	30.00	10.00	5.00	5.00	NBR/FABRIC	SAT-352
S590508304	50.00	70.00	30.00	10.00	5.00	5.00	NBR/FABRIC	SAT-1668
S590508311	**50.00**	**70.00**	**33.72**	**11.24**	**5.62**	**5.62**	**NBR/FABRIC**	**SAT-2885**
S590508311	50.00	70.00	35.00	11.66	5.83	5.83	NBR/FABRIC	SAT-773
S5905083A9	50.00	72.00	27.00	9.00	4.50	4.50	NBR/FABRIC	SAT-4063
S5905083A1	50.00	72.00	30.00	10.00	5.00	5.00	NBR/FABRIC	SAT-3327
S590508395	50.00	72.00	30.00	10.00	5.00	5.00	NBR/FABRIC	SAT-3145
S5905083A5	50.00	75.00	34.53	11.50	5.75	5.75	NBR/FABRIC	SAT-3483
S590508384	50.00	76.00	30.00	10.00	5.00	5.00	NBR/FABRIC	SAT-2793
S590508396	50.00	76.00	35.00	11.66	5.83	5.83	NBR/FABRIC	SAT-1515
S590508359	50.32	82.50	31.62	10.54	5.27	5.27	NBR/FABRIC	SAT-1539
S590508366	50.50	67.00	25.00	8.32	4.16	4.16	NBR/FABRIC	SAT-1986
S590508312	50.80	63.50	15.00	5.00	2.50	2.50	NBR/FABRIC	SAT-1860
S590508512	50.80	63.50	16.25	5.40	2.70	2.70	FKM/FABRIC	SAT-2490
S590508303	50.80	63.50	22.22	7.40	3.70	3.70	NBR/FABRIC	SAT-2283
S590508336	50.80	63.50	36.00	12.00	6.00	6.00	NBR/FABRIC	SAT-2844
S590508399	50.80	65.08	25.40	8.46	4.23	4.23	NBR/FABRIC	SAT-3268
S590508324	50.80	66.50	25.00	8.32	4.16	4.16	NBR/FABRIC	SAT-3316

Vee pack height can be adjusted by increasing or reducing the numbers of centre rings (C). This calculation can be done by the height of 'C' shown in the table.
Bold sizes are readily available in stock.
Other materials are available on request.

S59

Single Acting Rod Vee Pack

MAX SPARE LIMITED
QUALITY. PRECISION. SPEED.

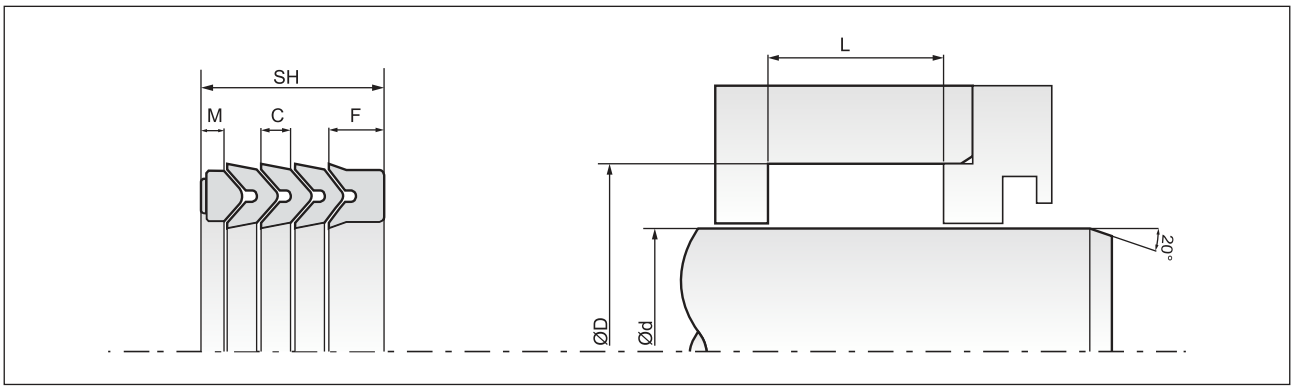

Part No.	d (h9)	D (H9)	SH (Stack Ht.)	F	C	M	Material	Mould No.
S590508308	50.80	66.67	25.27	8.42	4.21	4.21	NBR/FABRIC	SAT-1537
S590508309	**50.80**	**69.80**	**33.48**	**11.12**	**5.56**	**5.56**	**NBR/FABRIC**	**SAT-2884**
S590508348	50.80	69.85	25.40	8.46	4.23	4.23	NBR/FABRIC	SAT-1139
S590508520	50.80	69.85	25.40	8.46	4.23	4.23	FKM/FABRIC	SAT-3230
S590508521	50.80	69.85	34.92	11.64	5.82	5.82	FKM/FABRIC	SAT-3231
S590508382	50.80	76.20	33.33	11.10	5.55	5.55	NBR/FABRIC	SAT-2722
S59051K202	51.00	75.00	36.00	12.00	6.00	6.00	NBR/FABRIC	SAT-1155
S590528301	52.00	72.00	30.00	10.00	5.00	5.00	NBR/FABRIC	SAT-1267
S590538303	**53.97**	**69.85**	**25.26**	**8.42**	**4.21**	**4.21**	**NBR/FABRIC**	**SAT-2887**
S590538309	53.97	69.85	35.00	11.66	5.83	5.83	NBR/FABRIC	SAT-3038
S59053L301	53.97	79.37	23.57	7.84	3.92	3.92	AFLAS	SAT-3673
S590548302	54.00	65.00	20.50	6.80	3.40	3.40	NBR/FABRIC	SAT-3775
S590548301	54.00	70.00	25.00	8.32	4.16	4.16	NBR/FABRIC	SAT-3074
S590558326	55.00	66.00	30.00	10.00	5.00	5.00	NBR/FABRIC	SAT-3262
S590558323	55.00	70.00	22.50	7.50	3.75	3.75	NBR/FABRIC	SAT-2782
S590558402	55.00	70.00	26.50	8.82	4.41	4.41	NBR/FABRIC	SAT-1543
S590558301	55.00	70.00	35.32	11.76	5.88	5.88	NBR/FABRIC	SAT-320
S590558321	55.00	70.00	38.00	12.66	6.33	6.33	NBR/FABRIC	SAT-2484
S590558327	55.00	71.00	23.00	7.66	3.83	3.83	NBR/FABRIC	SAT-3387
S590551001	55.00	75.00	25.00	8.32	4.16	4.16	NBR/FABRIC	SAT-973
S590557801	55.00	75.00	25.00	8.32	4.16	4.16	CAL+PU-5	PPA-1088
S590558313	55.00	75.00	25.00	8.32	4.16	4.16	NBR/FABRIC	SAT-1169
S590558324	55.00	75.00	25.50	8.50	4.25	4.25	FKM/FABRIC	SAT-2963
S59055K202	55.00	75.00	30.00	10.00	5.00	5.00	PU	PPA-440
S590558501	55.00	75.00	36.00	12.00	6.00	6.00	FKM/FABRIC	SAT-3879
S590558304	**55.00**	**75.00**	**38.46**	**12.80**	**6.40**	**6.40**	**NBR/FABRIC**	**SAT-2888**
S590558322	55.00	75.00	56.00	18.66	9.33	9.33	NBR/FABRIC	SAT-2505
S590551003	55.00	76.00	30.00	10.00	5.00	5.00	NBR	SAT-3223
S590558319	55.00	82.00	40.00	13.32	6.66	6.66	NBR/FABRIC	SAT-2341
S590568509	56.00	68.00	36.00	12.00	6.00	6.00	FKM/FABRIC	SAT-2486
S590568348	56.00	70.00	22.70	7.56	3.78	3.78	NBR	SAT-3485
S590568511	56.00	70.00	25.00	8.32	4.16	4.16	FKM/FABRIC	SAT-454
S590568506	56.00	70.00	27.00	9.00	4.50	4.50	FKM/FABRIC	SAT-1288
S59056K102	56.00	71.00	16.22	5.40	2.70	2.70	NYLON	PPA-3424
S590568304	56.00	71.00	16.50	5.50	2.75	2.75	NBR/FABRIC	SAT-453
S590568501	56.00	71.00	17.20	5.72	2.86	2.86	FKM/FABRIC	SAT-3438
S590568502	56.00	71.00	22.50	7.50	3.75	3.75	NBR/FABRIC	SAT-485
S590568510	56.00	71.00	25.00	8.32	4.16	4.16	FKM/FABRIC	SAT-868
S590568323	56.00	71.00	25.00	8.32	4.16	4.16	NBR/FABRIC	SAT-1506
S590568346	56.00	71.20	22.50	7.50	3.75	3.75	NBR/FABRIC	SAT-3305
S590568320	56.00	72.00	32.00	10.66	5.33	5.33	NBR/FABRIC	SAT-1315
S590568301	56.00	76.00	21.95	7.30	3.65	3.65	NBR/FABRIC	SAT-520
S59056L501	56.00	76.00	30.00	10.00	5.00	5.00	PU	PPA-1809
S590568302	**56.00**	**76.00**	**33.30**	**11.10**	**5.55**	**5.55**	**NBR/FABRIC**	**SAT-2889**
S590568508	56.00	76.00	33.40	11.12	5.56	5.56	FKM/FABRIC	SAT-2239
S590568513	56.00	78.00	34.00	11.32	5.66	5.66	FKM/FABRIC	SAT-3148
S590561003	56.00	80.00	25.00	8.32	4.16	4.16	NBR	SAT-3227
S590561003	56.00	80.00	25.00	8.32	4.16	4.16	NBR	SAT-3233
S590568325	56.00	80.00	30.00	10.00	5.00	5.00	NBR/FABRIC	SAT-1727
S590568335	56.00	80.00	32.90	10.96	5.48	5.48	NBR/FABRIC	SAT-2790
S590578315	57.00	76.00	35.00	11.66	5.83	5.83	NBR/FABRIC	SAT-2670
S590578311	57.15	73.02	22.25	7.40	3.70	3.70	NBR/FABRIC	SAT-1140

Vee pack height can be adjusted by increasing or reducing the numbers of centre rings (C). This calculation can be done by the height of 'C' shown in the table.

Bold sizes are readily available in stock.

Other materials are available on request.

S59

Single Acting Rod Vee Pack

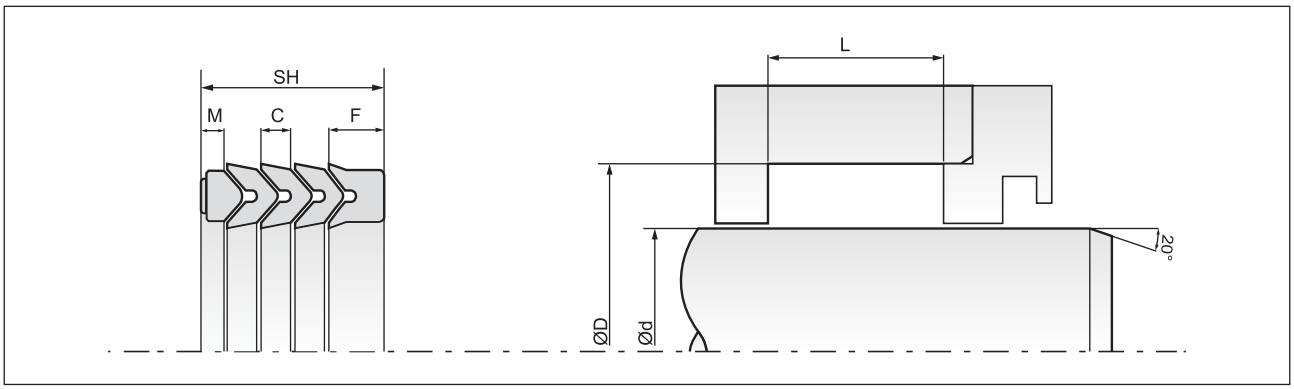

Part No.	d (h9)	D (H9)	SH (Stack Ht.)	F	C	M	Material	Mould No.
S590578314	57.15	73.02	27.78	9.26	4.63	4.63	NBR/FABRIC	SAT-2092
S590578601	57.15	76.20	30.17	10.04	5.02	5.02	FKM/FABRIC	SAT-4014
S590578310	57.15	88.90	47.60	15.86	7.93	7.93	NBR/FABRIC	SAT-1033
S590578401	57.73	76.96	30.99	10.32	5.16	5.16	NBR/FABRIC	SAT-4138
S590581003	58.00	79.00	30.00	10.00	5.00	5.00	NBR	SAT-3226
S590608320	60.00	75.00	19.00	6.32	3.16	3.16	NBR/FABRIC	SAT-316
S590608330	60.00	75.00	22.50	7.50	3.75	3.75	NBR/FABRIC	SAT-2551
S590608341	60.00	75.00	30.00	10.00	5.00	5.00	NBR/FABRIC	SAT-1468
S59608701	60.00	75.00	30.00	10.00	5.00	5.00	PU	PPA-2969
S590609002	60.00	76.00	21.30	7.10	3.55	3.55	NBR/FABRIC	SAT-4395
S590608340	60.00	76.00	25.00	8.32	4.16	4.16	NBR/FABRIC	SAT-2763
S590608310	60.00	76.00	27.00	9.00	4.50	4.50	NBR/FABRIC	SAT-3337
S590608343	60.00	76.00	29.00	9.66	4.83	4.83	NBR/FABRIC	SAT-325
S590608338	60.00	76.50	23.00	7.66	3.83	3.83	NBR/FABRIC	SAT-2651
S590608503	60.00	76.50	23.00	7.66	3.83	3.83	FKM/FABRIC	SAT-3156
S590608305	60.00	76.50	28.00	9.32	4.66	4.66	NBR/FABRIC	SAT-4073
S590608344	60.00	80.00	19.86	6.60	3.30	3.30	NBR/FABRIC	SAT-3171
S590608332	60.00	80.00	20.00	6.66	3.33	3.33	NBR/FABRIC	SAT-2258
S590608350	60.00	80.00	22.00	7.32	3.66	3.66	NBR/FABRIC	SAT-3649
S590608305	60.00	80.00	24.00	8.00	4.00	4.00	NBR/FABRIC	SAT-3476
S59060L501	60.00	80.00	30.00	10.00	5.00	5.00	PU	PPA-456
S590609001	60.00	80.00	30.70	10.22	5.11	5.11	NBR/FABRIC	SAT-3974
S590608304	**60.00**	**80.00**	**31.56**	**10.52**	**5.26**	**5.26**	**NBR/FABRIC**	**SAT-2900**
S590608304	60.00	80.00	32.15	110.70	55.35	55.35	NBR/FABRIC	SAT-1001
S590608315	60.00	80.00	33.50	11.16	5.58	5.58	NBR/FABRIC	SAT-3490
S590608339	60.00	80.00	35.00	11.66	5.83	5.83	NBR/FABRIC	SAT-2654
S590608326	60.00	80.00	38.00	12.66	6.33	6.33	NBR/FABRIC	SAT-1313
S590608323	60.00	82.00	31.62	10.54	5.27	5.27	NBR/FABRIC	SAT-1256
S590608333	60.00	83.00	25.00	8.32	4.16	4.16	NBR/FABRIC	SAT-2284
S590608329	60.00	85.00	34.00	11.32	5.66	5.66	NBR/FABRIC	SAT-1824
S590608342	60.00	85.00	35.00	11.66	5.83	5.83	NBR/FABRIC	SAT-3122
S590628301	62.00	82.00	28.00	9.32	4.66	4.66	NBR/FABRIC	SAT-1432
S590628304	62.00	82.00	35.00	11.66	5.83	5.83	NBR/FABRIC	SAT-3275
S590628302	62.00	82.00	40.00	13.32	6.66	6.66	NBR/FABRIC	SAT-2671
S590628303	62.00	88.00	40.00	13.32	6.66	6.66	NBR/FABRIC	SAT-2970
S590638370	63.00	75.00	30.00	10.00	5.00	5.00	NBR/FABRIC	SAT-3370
S590638336	**63.00**	**78.00**	**24.00**	**8.00**	**4.00**	**4.00**	**NBR/FABRIC**	**SAT-2899**
S590638511	63.00	79.00	19.00	6.32	3.16	3.16	FKM/FABRIC	SAT-3538
S590638309	**63.00**	**80.00**	**27.00**	**9.00**	**4.50**	**4.50**	**NBR/FABRIC**	**SAT-2898**
S590638509	63.00	80.00	33.00	11.00	5.50	5.50	FKM/FABRIC	SAT-1756
S590638341	63.00	80.50	27.70	9.22	4.61	4.61	NBR/FABRIC	SAT-1143
S590638304	63.00	83.00	21.94	7.30	3.65	3.65	NBR/FABRIC	SAT-399
S590638357	63.00	83.00	32.00	10.66	5.33	5.33	NBR/FABRIC	SAT-2404
S590638356	63.00	83.00	40.00	13.32	6.66	6.66	NBR/FABRIC	SAT-2274
S590638365	63.00	84.00	29.00	9.66	4.83	4.83	NBR/FABRIC	SAT-2979
S590638602	63.00	85.00	31.00	10.32	5.16	5.16	FKM/FABRIC	SAT-4052
S590638403	63.50	76.20	21.32	7.10	3.55	3.55	NBR/FABRIC	SAT-4001
S590638351	63.50	76.20	22.22	7.40	3.70	3.70	NBR/FABRIC	SAT-563
S590638361	63.50	76.50	16.00	5.32	2.66	2.66	NBR/FABRIC	SAT-2935
S590638303	63.50	79.37	23.81	7.92	3.96	3.96	NBR/FABRIC	SAT-489
S590638508	63.50	79.37	26.97	8.98	4.49	4.49	FKM	SAT-2090
S590638350	63.50	79.37	30.00	10.00	5.00	5.00	NBR/FABRIC	SAT-134

Vee pack height can be adjusted by increasing or reducing the numbers of centre rings (C). This calculation can be done by the height of 'C' shown in the table.
Bold sizes are readily available in stock.
Other materials are available on request.

S59

Single Acting Rod Vee Pack

MAX SPARE LIMITED
QUALITY. PRECISION. SPEED.

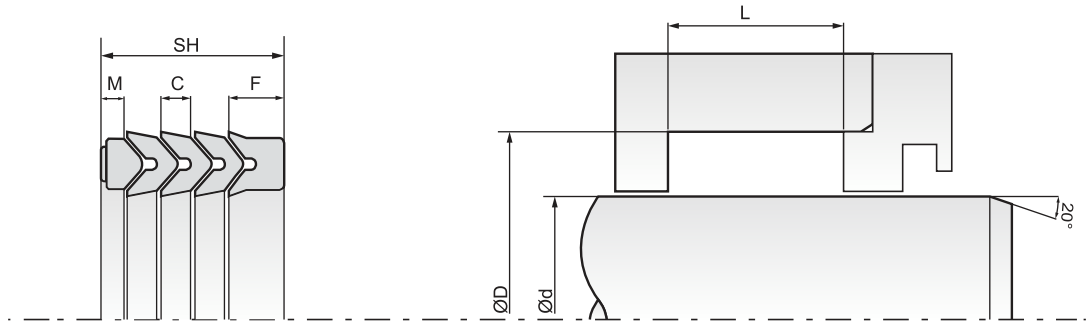

Part No.	d (h9)	D (H9)	SH (Stack Ht.)	F	C	M	Material	Mould No.
S590638308	63.50	80.00	28.00	9.32	4.66	4.66	NBR/FABRIC	SAT-826
S590638603	63.50	82.50	26.59	8.86	4.43	4.43	NBR/FABRIC	SAT-237
S590638306	63.50	82.50	26.59	8.86	4.43	4.43	NBR/FABRIC	SAT-1548
S590631003	63.50	82.50	30.00	10.00	5.00	5.00	NBR	SAT-3225
S590638307	63.50	82.50	31.62	10.54	5.27	5.27	NBR/FABRIC	SAT-1032
S590638402	63.50	82.55	25.40	8.46	4.23	4.23	NBR/FABRIC	SAT-3992
S590638505	63.50	82.55	36.00	12.00	6.00	6.00	FKM/FABRIC	SAT-956
S590638373	63.50	85.00	35.00	11.66	5.83	5.83	NBR/FABRIC	SAT-2227
S590648304	64.00	80.00	25.80	8.60	4.30	4.30	NBR/FABRIC	SAT-4047
S59065L501	65.00	77.00	20.00	6.66	3.33	3.33	PU	PPA-2424
S590658316	65.00	77.00	22.00	7.32	3.66	3.66	NBR/FABRIC	SAT-3417
S590658308	65.00	79.00	28.00	9.32	4.66	4.66	NBR/FABRIC	SAT-1420
S590658304	**65.00**	**80.00**	**25.98**	**8.64**	**4.32**	**4.32**	**NBR/FABRIC**	**SAT-2890**
S590658304	65.00	80.00	26.00	8.66	4.33	4.33	NBR/FABRIC	SAT-2324
S590658315	65.00	80.00	28.00	9.32	4.66	4.66	NBR/FABRIC	SAT-3407
S590658309	65.00	80.00	34.60	11.52	5.76	5.76	NBR/FABRIC	SAT-1446
S590658307	65.00	80.00	38.66	12.86	6.43	6.43	NBR/FABRIC	SAT-1547
S590658313	65.00	83.40	33.70	11.22	5.61	5.61	NBR/FABRIC	SAT-2658
S590658502	65.00	85.00	27.00	9.00	4.50	4.50	FKM/FABRIC	SAT-763
S590658312	65.00	85.00	28.50	9.50	4.75	4.75	NBR/FABRIC	SAT-2609
S590658302	**65.00**	**85.00**	**28.98**	**9.66**	**4.83**	**4.83**	**NBR/FABRIC**	**SAT-2891**
S590658302	65.00	85.00	29.00	9.66	4.83	4.83	NBR/FABRIC	SAT-247
S590658310	65.00	85.00	29.00	9.66	4.83	4.83	NBR/FABRIC	SAT-1862
S590658314	65.00	90.00	38.00	12.66	6.33	6.33	NBR/FABRIC	SAT-3304
S590668501	66.54	92.25	32.25	10.72	5.36	5.36	FKM/FABRIC	SAT-2118
S59066D702	66.67	85.72	22.86	7.62	3.81	3.81	HNBR/FABRIC	SAT-3143
S590668303	66.67	85.72	27.00	9.00	4.50	4.50	NBR/FABRIC	SAT-1284
S59066D701	66.67	85.72	28.57	9.50	4.75	4.75	HNBR/FABRIC	SAT-3144
S590688501	68.00	80.00	42.00	14.00	7.00	7.00	FKM/FABRIC	SAT-2466
S590688502	68.00	89.00	34.00	11.32	5.66	5.66	FKM/FABRIC	SAT-3147
S590688301	68.00	90.00	32.00	10.66	5.33	5.33	NBR/FABRIC	SAT-3077
S59069K101	69.85	82.55	19.55	6.50	3.25	3.25	NBR/FABRIC	SAT-3993
S590698309	69.85	82.55	25.40	8.46	4.23	4.23	NBR/FABRIC	SAT-234
S590698316	69.85	88.90	25.40	8.46	4.23	4.23	NBR/FABRIC	SAT-3973
S59069K103	69.85	88.90	25.40	8.46	4.23	4.23	NBR/FABRIC	SAT-4367
S590698303	69.85	88.90	33.50	11.16	5.58	5.58	NBR/FABRIC	SAT-1062
S590698315	69.85	89.40	25.35	8.44	4.22	4.22	NBR/FABRIC	SAT-3969
S590698501	69.85	92.07	30.17	10.04	5.02	5.02	FKM/FABRIC	SAT-1724
S590698312	69.85	101.60	42.86	14.28	7.14	7.14	NBR/FABRIC	SBT-844
S59069L501	69.90	90.95	28.00	9.32	4.66	4.66	PU	PPA-2738
S590708347	70.00	80.00	30.00	10.00	5.00	5.00	NBR/FABRIC	SAT-2494
S590708321	**70.00**	**85.00**	**16.86**	**5.62**	**2.81**	**2.81**	**NBR/FABRIC**	**SAT-2893**
S590708323	70.00	85.00	22.50	7.50	3.75	3.75	NBR/FABRIC	SAT-1418
S590708301	70.00	85.00	22.50	7.50	3.75	3.75	NBR/FABRIC	SAT-2746
S590708307	70.00	85.00	25.00	8.32	4.16	4.16	NBR/FABRIC	SAT-2297
S590708335	70.00	85.00	28.00	9.32	4.66	4.66	NBR/FABRIC	SAT-1863
S590708352	70.00	85.00	28.00	9.32	4.66	4.66	NBR	SAT-194
S590708335	70.00	85.00	28.00	9.32	4.66	4.66	NBR/FABRIC	SAT-318
S590701001	70.00	85.00	30.00	10.00	5.00	5.00	NBR	SAT-1314
S590708355	70.00	85.00	38.00	12.66	6.33	6.33	NBR/FABRIC	SAT-1129
S59070D601	70.00	88.80	24.00	8.00	4.00	4.00	HNBR/FABRIC	SAT-1128
S590709001	70.00	90.00	19.20	6.40	3.20	3.20	NBR/FABRIC	SAT-4389

Vee pack height can be adjusted by increasing or reducing the numbers of centre rings (C). This calculation can be done by the height of 'C' shown in the table.

Bold sizes are readily available in stock.

Other materials are available on request.

S59

Single Acting Rod Vee Pack

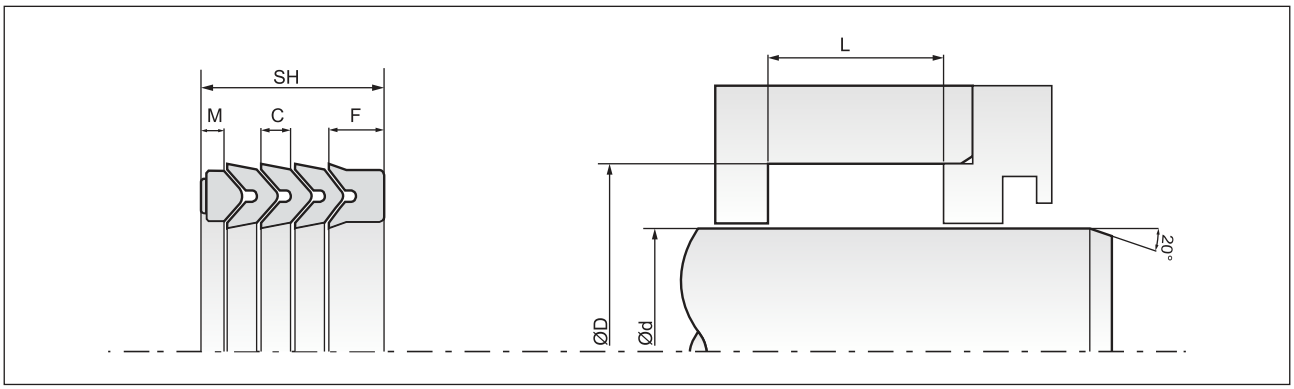

Part No.	d (h9)	D (H9)	SH (Stack Ht.)	F	C	M	Material	Mould No.
S590708318	70.00	90.00	23.00	7.66	3.83	3.83	NBR/FABRIC	SAT-4146
S59070L501	70.00	90.00	23.50	7.82	3.91	3.91	PU	PPA-2034
S590708365	70.00	90.00	23.50	7.82	3.91	3.91	NBR/FABRIC	SAT-3301
S590708357	70.00	90.00	24.00	8.00	4.00	4.00	NBR/FABRIC	SAT-2126
S590708526	70.00	90.00	25.00	8.32	4.16	4.16	FKM/FABRIC	SAT-3308
S590708306	**70.00**	**90.00**	**27.00**	**9.00**	**4.50**	**4.50**	**NBR/FABRIC**	**SAT-2892**
S590707801	70.00	90.00	30.00	10.00	5.00	5.00	PU	PPA-817
S590706601	70.00	90.00	30.00	10.00	5.00	5.00	FKM	SAT-1674
S59070K201	70.00	90.00	30.00	10.00	5.00	5.00	CNY	PPA-383
S590708303	70.00	90.00	30.00	10.00	5.00	5.00	NBR/FABRIC	SAT-1549
S590701101	70.00	90.00	30.00	10.00	5.00	5.00	NBR/FABRIC	SAT-3614
S590708331	70.00	90.00	32.00	10.66	5.33	5.33	NBR/FABRIC	SAT-1476
S590708308	70.00	90.00	35.00	11.66	5.83	5.83	NBR/FABRIC	SAT-361
S590708524	70.00	90.00	41.00	13.66	6.83	6.83	NBR/FABRIC	SAT-3218
S590708360	70.00	95.00	24.00	8.00	4.00	4.00	NBR/FABRIC	SAT-3201
S590708515	70.00	95.00	36.00	12.00	6.00	6.00	FKM/FABRIC	SAT-1655
S590708515	70.00	95.00	36.00	12.00	6.00	6.00	FKM/FABRIC	SAT-2942
S590708373	70.00	95.00	40.00	13.32	6.66	6.66	NBR/FABRIC	SAT-3672
S590728301	72.00	92.00	35.00	11.66	5.83	5.83	NBR/FABRIC	SAT-2593
S590738501	73.02	85.72	16.25	5.40	2.70	2.70	FKM/FABRIC	SAT-2373
S590738301	73.02	88.90	26.58	8.86	4.43	4.43	NBR/FABRIC	SAT-1030
S590748301	74.00	96.00	34.00	11.32	5.66	5.66	NBR/FABRIC	SAT-3222
S59075F301	75.00	90.00	22.50	7.50	3.75	3.75	KEVLAR-FABRIC	SAT-4282
S590758316	75.00	90.00	27.00	9.00	4.50	4.50	NBR/FABRIC	SAT-1551
S590758316	75.00	90.00	27.00	9.00	4.50	4.50	NBR/FABRIC	SAT-2710
S590758309	75.00	95.00	30.00	10.00	5.00	5.00	NBR/FABRIC	SAT-209
S590758302	**75.00**	**95.00**	**30.00**	**10.00**	**5.00**	**5.00**	**NBR/FABRIC**	**SAT-2894**
S590758313	75.00	95.00	32.20	10.72	5.36	5.36	NBR/FABRIC	SAT-1922
S590758304	**75.00**	**100.00**	**30.00**	**10.00**	**5.00**	**5.00**	**NBR/FABRIC**	**SAT-2895**
S590758315	75.00	100.00	40.00	13.32	6.66	6.66	NBR/FABRIC	SAT-2073
S590768323	76.00	88.00	20.00	6.66	3.33	3.33	NBR/FABRIC	SAT-2366
S590768324	76.00	88.50	15.00	5.00	2.50	2.50	NBR/FABRIC	SAT-2955
S590768322	76.00	89.00	25.00	8.32	4.16	4.16	NBR/FABRIC	SAT-1988
S590768502	76.00	92.00	21.50	7.16	3.58	3.58	FKM/FABRIC	SAT-3766
S590768325	76.00	95.00	30.00	10.00	5.00	5.00	NBR/FABRIC	SAT-3039
S590768305	76.20	88.90	22.22	7.40	3.70	3.70	NBR/FABRIC	SAT-2285
S590768317	76.20	92.07	26.42	8.80	4.40	4.40	NBR/FABRIC	SAT-1552
S590768302	76.20	95.25	32.00	10.66	5.33	5.33	NBR/FABRIC	SAT-2167
S590768326	76.20	95.25	39.00	13.00	6.50	6.50	FKM	SAT-321
S590768327	76.20	101.60	31.75	10.58	5.29	5.29	NBR/FABRIC	SBT-135
S59076K101	76.83	95.88	25.97	8.64	4.32	4.32	NBR/FABRIC	SAT-3622
S590788301	78.00	98.00	30.00	10.00	5.00	5.00	NBR/FABRIC	SAT-1577
S590798502	79.37	92.07	19.05	6.34	3.17	3.17	FKM/FABRIC	SAT-3284
S590798302	79.47	98.42	30.00	10.00	5.00	5.00	NBR/FABRIC	SAT-1513
S590798502	79.50	100.00	25.00	8.32	4.16	4.16	FKM/FABRIC	SAT-1767
S590808302	**80.00**	**95.00**	**17.46**	**5.80**	**2.90**	**2.90**	**NBR/FABRIC**	**SAT-2897**
S590808335	80.00	95.00	17.50	5.82	2.91	2.91	NBR/FABRIC	SAT-1553
S590808303	80.00	95.00	20.00	6.66	3.33	3.33	NBR/FABRIC	SAT-3501
S590808507	80.00	95.00	22.50	7.50	3.75	3.75	FKM/FABRIC	SAT-3553
S590808337	80.00	95.00	22.75	7.58	3.79	3.79	FKM/FABRIC	SAT-2618
S590802001	80.00	96.00	28.50	9.50	4.75	4.75	CR/FABRIC	SAT-4206
S590808312	80.00	97.00	50.00	16.66	8.33	8.33	NBR/FABRIC	SAT-3259

Vee pack height can be adjusted by increasing or reducing the numbers of centre rings (C). This calculation can be done by the height of 'C' shown in the table.
Bold sizes are readily available in stock.
Other materials are available on request.

S59

Single Acting Rod Vee Pack

MAX SPARE LIMITED
QUALITY. PRECISION. SPEED.

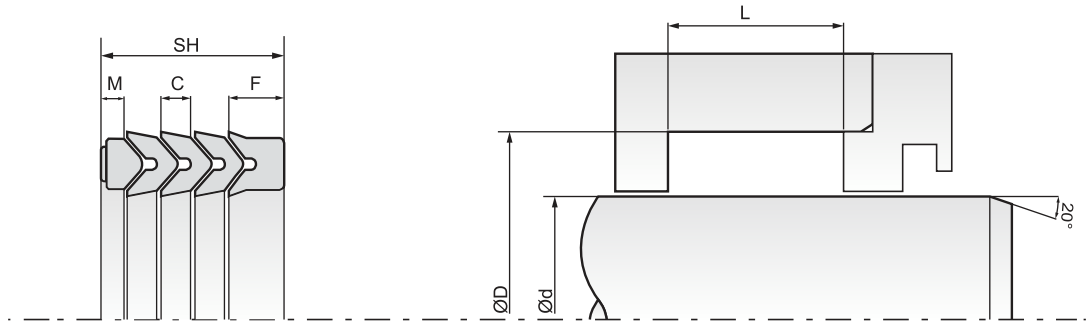

Part No.	d (h9)	D (H9)	SH (Stack Ht.)	F	C	M	Material	Mould No.
S590808358	80.00	100.00	16.00	5.32	2.66	2.66	NBR/FABRIC	SAT-739
S590808322	80.00	100.00	21.20	7.00	3.50	3.50	NBR/FABRIC	SAT-687
S590804501	80.00	100.00	30.00	10.00	5.00	5.00	VMQ	SAT-2026
S590808301	80.00	100.00	30.00	10.00	5.00	5.00	NBR/FABRIC	SAT-2440
S590808338	80.00	100.00	30.00	10.00	5.00	5.00	NBR/FABRIC	SAT-1865
S590808301	**80.00**	**100.00**	**30.00**	**10.00**	**5.00**	**5.00**	**NBR/FABRIC**	**SAT-2896**
S590808402	80.00	100.00	30.00	10.00	5.00	5.00	NBR/FABRIC	SAT-4360
S590808324	80.00	100.00	32.00	10.66	5.33	5.33	NBR/FABRIC	SAT-1034
S590808324	80.00	100.00	32.00	10.66	5.33	5.33	NBR/FABRIC	SAT-1346
S590808340	80.00	100.00	34.00	11.32	5.66	5.66	NBR/FABRIC	SAT-2070
S59080L501	80.00	100.00	35.00	11.66	5.83	5.83	PU	PPA-475
S59080L502	80.00	100.00	36.00	12.00	6.00	6.00	PU	PPA-2409
S590808353	80.00	100.00	38.00	12.66	6.33	6.33	NBR/FABRIC	SAT-2909
S590808354	80.00	102.00	40.00	13.32	6.66	6.66	NBR/FABRIC	SBT-1603
S590808311	80.00	105.00	30.00	10.00	5.00	5.00	NBR/FABRIC	SBT-495
S590808339	80.00	110.00	34.00	11.32	5.66	5.66	NBR/FABRIC	SBT-1542
S590818301	81.00	100.00	30.00	10.00	5.00	5.00	NBR/FABRIC	SAT-2603
S59081K101	81.28	95.75	19.05	6.34	3.17	3.17	NBR/FABRIC	SAT-4022
S59081D601	81.50	102.00	20.00	6.66	3.33	3.33	HNBR/FABRIC	SBT-918
S590828501	82.00	105.00	34.00	11.32	5.66	5.66	FKM/FABRIC	SBT-2281
S590828314	82.50	102.00	30.00	10.00	5.00	5.00	NBR/FABRIC	SBT-1469
S590828503	82.55	95.25	16.28	5.42	2.71	2.71	FKM/FABRIC	SAT-3939
S590828302	82.55	95.25	21.72	7.24	3.62	3.62	NBR/FABRIC	SAT-1061
S590838301	**82.55**	**101.60**	**28.92**	**9.64**	**4.82**	**4.82**	**NBR/FABRIC**	**SBT-2076**
S590826001	82.55	101.60	28.92	9.64	4.82	4.82	EPDM	SBT-2432
S590828301	82.55	101.60	28.97	9.64	4.82	4.82	NBR/FABRIC	SBT-860
S590828403	82.55	101.60	31.75	10.58	5.29	5.29	NBR/FABRIC	SBT-3099
S590828401	82.55	102.10	25.40	8.46	4.23	4.23	NBR/FABRIC	SBT-2988
S590838301	83.00	100.00	30.00	10.00	5.00	5.00	NBR/FABRIC	SAT-2029
S590838501	83.00	108.00	38.00	12.66	6.33	6.33	FKM/FABRIC	SBT-1755
S590858316	85.00	100.00	14.42	4.76	2.38	2.38	NBR/FABRIC	SAT-2718
S590858317	85.00	100.00	22.50	7.50	3.75	3.75	NBR/FABRIC	SAT-3205
S590858401	85.00	100.00	25.40	8.46	4.23	4.23	NBR/FABRIC	SAT-4006
S590858314	85.00	100.00	38.00	12.66	6.33	6.33	NBR/FABRIC	SAT-2477
S590858313	85.00	101.80	22.00	7.32	3.66	3.66	NBR/FABRIC	SBT-1720
S590858304	85.00	105.00	27.50	9.16	4.58	4.58	NBR/FABRIC	SBT-1596
S590858302	**85.00**	**105.00**	**30.00**	**10.00**	**5.00**	**5.00**	**NBR/FABRIC**	**SBT-2077**
S590858315	85.00	105.00	38.00	12.66	6.33	6.33	NBR/FABRIC	SBT-1782
S590858305	85.00	110.00	33.50	11.16	5.58	5.58	NBR/FABRIC	SBT-2503
S590858312	85.00	110.00	80.00	26.66	13.33	13.33	NBR/FABRIC	SBT-1141
S590858311	85.00	130.00	80.00	26.66	13.33	13.33	NBR/FABRIC	SBT-1078
S590858319	85.72	104.77	28.30	9.42	4.71	4.71	NBR/FABRIC	SBT-2559
S590868301	86.00	100.00	29.00	9.66	4.83	4.83	NBR/FABRIC	SAT-2504
S590868302	86.00	105.00	37.00	12.32	6.16	6.16	NBR/FABRIC	SBT-2623
S590888502	88.00	100.00	40.00	13.32	6.66	6.66	FKM/FABRIC	SAT-2487
S591148325	88.80	101.60	15.00	5.00	2.50	2.50	NBR/FABRIC	SBT-2160
S590888501	88.90	101.60	15.80	5.26	2.63	2.63	FKM/FABRIC	SBT-1153
S59088E701	88.90	107.95	25.40	8.46	4.23	4.23	NBR/FABRIC	SBT-3169
S590888601	88.90	107.95	30.22	10.06	5.03	5.03	FKM/FABRIC	SBT-2808
S590888321	88.90	114.30	14.30	4.76	2.38	2.38	NBR/FABRIC	SBT-2616
S590888304	**88.90**	**114.30**	**35.28**	**11.76**	**5.88**	**5.88**	**NBR/FABRIC**	**SBT-2078**
S59088L501	88.90	114.30	55.50	18.50	9.25	9.25	PU	PPA-2960

Vee pack height can be adjusted by increasing or reducing the numbers of centre rings (C). This calculation can be done by the height of 'C' shown in the table.

Bold sizes are readily available in stock.

Other materials are available on request.

S59

Single Acting Rod Vee Pack

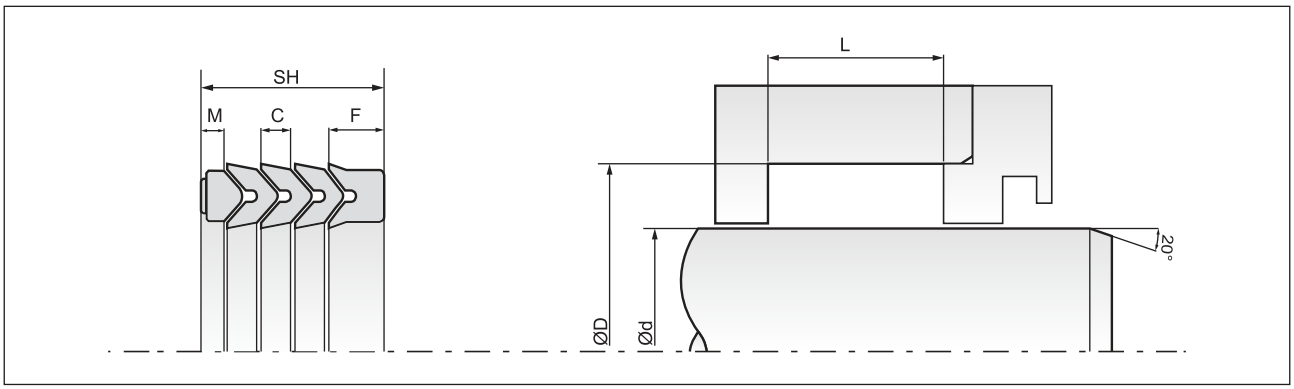

Part No.	d (h9)	D (H9)	SH (Stack Ht.)	F	C	M	Material	Mould No.
S590888316	88.90	120.65	53.97	17.98	8.99	8.99	NBR/FABRIC	SBT-1806
S590898401	89.00	108.00	31.50	10.50	5.25	5.25	NBR/FABRIC	SBT-1395
S590898302	89.00	110.00	30.00	10.00	5.00	5.00	NBR/FABRIC	SBT-2302
S590898303	89.90	114.30	35.32	11.76	5.88	5.88	NBR/FABRIC	SBT-1657
S590908348	90.00	104.00	21.00	7.00	3.50	3.50	NBR/FABRIC	SBT-1579
S590908307	**90.00**	**105.00**	**16.86**	**5.62**	**2.81**	**2.81**	**NBR/FABRIC**	**SBT-2081**
S590908519	90.00	105.00	20.00	6.66	3.33	3.33	FKM/FABRIC	SBT-2375
S590908502	90.00	105.00	22.50	7.50	3.75	3.75	FKM/FABRIC	SBT-966
S590908509	90.00	105.00	23.80	7.92	3.96	3.96	FKM/FABRIC	SBT-192
S590908505	90.00	105.00	25.00	8.32	4.16	4.16	FKM/FABRIC	SBT-1243
S590908380	90.00	105.00	25.00	8.32	4.16	4.16	NBR/FABRIC	SBT-2699
S590908355	90.00	105.00	27.50	9.16	4.58	4.58	NBR/FABRIC	SBT-1752
S590908339	90.00	105.00	30.00	10.00	5.00	5.00	NBR/FABRIC	SBT-1179
S590908344	90.00	105.00	31.53	10.50	5.25	5.25	NBR/FABRIC	SBT-1389
S590908516	90.00	106.00	15.00	5.00	2.50	2.50	FKM/FABRIC	SBT-1797
S590908305	**90.00**	**110.00**	**24.72**	**8.24**	**4.12**	**4.12**	**NBR/FABRIC**	**SBT-2079**
S590908343	90.00	110.00	26.00	8.66	4.33	4.33	PU	PPA-925
S590908346	90.00	110.00	30.00	10.00	5.00	5.00	NBR/FABRIC	PPA-946
S590908310	**90.00**	**110.00**	**30.00**	**10.00**	**5.00**	**5.00**	**NBR/FABRIC**	**SBT-2082**
S590908333	90.00	110.00	32.00	10.66	5.33	5.33	NBR/FABRIC	SBT-941
S590908367	90.00	110.00	36.00	12.00	6.00	6.00	NBR/FABRIC	SBT-2191
S590908363	90.00	110.00	38.00	12.66	6.33	6.33	NBR/FABRIC	SBT-2013
S590908337	90.00	110.00	80.00	26.66	13.33	13.33	NBR/FABRIC	SBT-1142
S590908302	**90.00**	**115.00**	**27.36**	**9.12**	**4.56**	**4.56**	**NBR/FABRIC**	**SBT-2080**
S590908302	90.00	115.00	27.41	9.12	4.56	4.56	NBR/FABRIC	SBT-1208
S590908366	90.00	115.00	31.00	10.32	5.16	5.16	NBR/FABRIC	SBT-2168
S590908336	90.00	115.00	32.00	10.66	5.33	5.33	NBR/FABRIC	SBT-111
S590903305	90.00	115.00	33.92	11.30	5.65	5.65	EPDM	SBT-2270
S590908378	90.00	115.00	36.00	12.00	6.00	6.00	NBR/FABRIC	SBT-2640
S590908518	90.00	115.00	41.00	13.66	6.83	6.83	FKM/FABRIC	SBT-1497
S590901001	90.00	115.00	41.50	13.82	6.91	6.91	NBR	SBT-956
S590908311	90.00	120.00	30.00	10.00	5.00	5.00	NBR/FABRIC	SBT-1188
S590908375	90.00	120.00	44.00	14.66	7.33	7.33	NBR/FABRIC	SBT-317
S590928501	92.07	111.12	30.17	10.04	5.02	5.02	FKM/FABRIC	SBT-2600
S590958316	95.00	110.00	30.00	10.00	5.00	5.00	NBR/FABRIC	SBT-1093
S590958906	**95.00**	**115.00**	**30.00**	**10.00**	**5.00**	**5.00**	**NBR/FABRIC**	**SBT-2084**
S590958301	95.00	115.00	33.00	11.00	5.50	5.50	NBR/FABRIC	SBT-2550
S590958308	95.00	115.00	35.00	11.66	5.83	5.83	NBR/FABRIC	SBT-1027
S590958321	95.00	120.00	23.00	7.66	3.83	3.83	NBR/FABRIC	SBT-1342
S590958322	95.00	120.00	40.00	13.32	6.66	6.66	NBR/FABRIC	SBT-1391
S590958303	**95.00**	**120.00**	**40.50**	**13.50**	**6.75**	**6.75**	**NBR/FABRIC**	**SBT-2083**
S59095L501	95.00	120.00	42.50	14.16	7.08	7.08	PU	PPA-478
S590958320	95.00	123.00	50.00	16.66	8.33	8.33	NBR/FABRIC	SBT-1203
S590958319	95.00	125.00	25.00	8.32	4.16	4.16	NBR/FABRIC	SBT-1147
S590958317	95.00	125.00	40.00	13.32	6.66	6.66	NBR/FABRIC	SBT-1096
S590958315	95.25	111.13	24.26	8.08	4.04	4.04	NBR/FABRIC	SBT-1004
S590958323	95.25	114.30	30.00	10.00	5.00	5.00	NBR/FABRIC	SBT-1390
S590958401	95.25	114.80	25.40	8.46	4.23	4.23	NBR/FABRIC	SBT-2987
S590958314	95.25	120.65	38.10	12.70	6.35	6.35	NBR/FABRIC	SBT-917
S59095K102	95.88	114.93	25.81	8.60	4.30	4.30	NBR/FABRIC	SBT-3074
S590988401	98.30	123.70	50.80	16.92	8.46	8.46	NBR/FABRIC	SBT-3100
S590988301	98.42	114.30	26.59	8.86	4.43	4.43	NBR/FABRIC	SBT-902

Vee pack height can be adjusted by increasing or reducing the numbers of centre rings (C). This calculation can be done by the height of 'C' shown in the table.
Bold sizes are readily available in stock.

Other materials are available on request.

S59

Single Acting Rod Vee Pack

MAX SPARE LIMITED
QUALITY. PRECISION. SPEED.

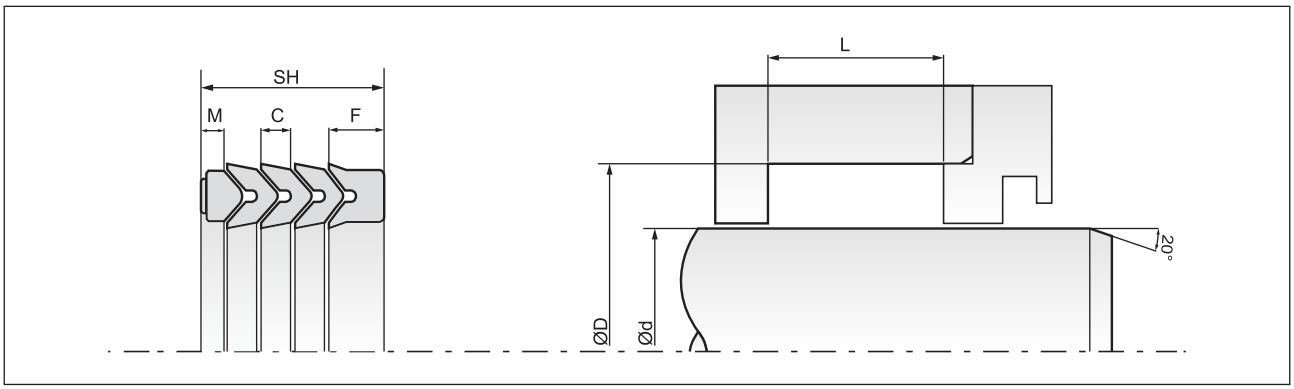

Part No.	d (h9)	D (H9)	SH (Stack Ht.)	F	C	M	Material	Mould No.
S590988501	98.42	117.47	30.17	10.04	5.02	5.02	FKM/FABRIC	SBT-2601
S590998301	99.00	125.00	42.50	14.16	7.08	7.08	NBR/FABRIC	SBT-2683
S591008324	**100.00**	**115.00**	**22.50**	**7.50**	**3.75**	**3.75**	**NBR/FABRIC**	**SBT-2086**
S591008501	100.00	115.00	30.00	10.00	5.00	5.00	FKM/FABRIC	SBT-1427
S591008505	100.00	115.00	32.00	10.66	5.33	5.33	FKM/FABRIC	SBT-1595
S591008540	100.00	120.00	24.80	8.26	4.13	4.13	FKM/FABRIC	SBT-1893
S591008325	**100.00**	**120.00**	**30.00**	**10.00**	**5.00**	**5.00**	**NBR/FABRIC**	**SBT-2087**
S591008343	100.00	120.00	32.00	10.66	5.33	5.33	FKM/FABRIC	SBT-1498
S591008343	100.00	120.00	32.00	10.66	5.33	5.33	NBR/FABRIC	SBT-2051
S591008361	100.00	120.00	33.00	11.00	5.50	5.50	NBR/FABRIC	SBT-1825
S591008373	100.00	120.00	45.00	15.00	7.50	7.50	NBR/FABRIC	SBT-121
S591008335	100.00	120.00	60.00	20.00	10.00	10.00	NBR/FABRIC	SBT-1037
S591008536	100.00	122.00	50.00	16.66	8.33	8.33	FKM/FABRIC	SBT-1398
S591008544	100.00	125.00	25.00	8.32	4.16	4.16	NBR/FABRIC	SBT-1131
S591008511	100.00	125.00	25.00	8.32	4.16	4.16	FKM/FABRIC	SAT-2592
S591008351	100.00	125.00	25.80	8.60	4.30	4.30	NBR/FABRIC	SBT-1994
S591008338	100.00	125.00	26.00	8.66	4.33	4.33	NBR/FABRIC	SBT-1855
S59100L501	100.00	125.00	26.00	8.66	4.33	4.33	PU	PPA-1465
S591006017	100.00	125.00	26.00	8.66	4.33	4.33	PU	PPA-3049
S59100L503	100.00	125.00	26.00	8.66	4.33	4.33	PU	PPA-2859
S591008339	100.00	125.00	28.50	9.50	4.75	4.75	PU	PPA-924
S591008333	100.00	125.00	35.00	11.66	5.83	5.83	NBR/FABRIC	SBT-765
S591006601	100.00	125.00	37.00	12.32	6.16	6.16	FKM	SBT-1367
S591001001	100.00	125.00	38.58	12.86	6.43	6.43	NBR	SBT-1784
S591008307	**100.00**	**125.00**	**38.58**	**12.86**	**6.43**	**6.43**	**NBR/FABRIC**	**SBT-2085**
S591008366	100.00	125.00	42.50	14.16	7.08	7.08	NBR/FABRIC	SBT-1499
S591008367	100.00	130.00	32.50	10.82	5.41	5.41	NBR/FABRIC	SBT-1005
S591008369	100.00	130.00	40.00	13.32	6.66	6.66	NBR/FABRIC	SBT-2292
S591008326	100.00	130.00	45.00	15.00	7.50	7.50	NBR/FABRIC	SBT-623
S591008549	100.00	135.00	40.00	13.32	6.66	6.66	FKM/FABRIC	SBT-2876
S591008360	100.00	135.00	50.00	16.66	8.33	8.33	NBR/FABRIC	SBT-1791
S591008337	100.50	123.50	36.50	12.16	6.08	6.08	NBR/FABRIC	SBT-1098
S591018318	101.00	127.00	39.00	13.00	6.50	6.50	NBR/FABRIC	SBT-1849
S591018502	101.40	121.40	30.00	10.00	5.00	5.00	FKM/FABRIC	SBT-3093
S591018320	101.60	114.50	22.00	7.32	3.66	3.66	NBR/FABRIC	SBT-2198
S591018321	101.60	117.48	28.55	9.50	4.75	4.75	NBR/FABRIC	SBT-2660
S591018319	101.60	120.50	21.00	7.00	3.50	3.50	NBR/FABRIC	SBT-2150
S591018501	101.60	120.65	25.37	8.44	4.22	4.22	FKM/FABRIC	SBT-2556
S591018316	101.60	120.65	31.75	10.58	5.29	5.29	NBR/FABRIC	SBT-1770
S591018301	**101.60**	**127.00**	**32.10**	**110.70**	**55.35**	**55.35**	**NBR/FABRIC**	**SBT-2088**
S591018315	101.60	127.00	37.00	12.32	6.16	6.16	NBR/FABRIC	SBT-147
S591018317	101.70	115.00	30.00	10.00	5.00	5.00	NBR/FABRIC	SBT-1829
S59105L501	105.00	125.00	24.00	8.00	4.00	4.00	PU	PPA-2367
S591058501	105.00	125.00	29.76	9.92	4.96	4.96	FKM/FABRIC	SBT-1789
S591058304	105.00	130.00	33.00	11.00	5.50	5.50	NBR/FABRIC	SBT-1597
S591058502	105.00	130.00	34.00	11.32	5.66	5.66	FKM/FABRIC	SBT-1006
S591078306	107.95	127.00	28.56	9.50	4.75	4.75	NBR/FABRIC	SBT-2254
S591078307	107.95	127.00	30.00	10.00	5.00	5.00	NBR/FABRIC	SBT-1392
S5901078301	107.95	127.00	31.75	10.58	5.29	5.29	NBR/FABRIC	SBT-1470
S591088301	108.00	127.00	20.00	6.66	3.33	3.33	NBR/FABRIC	SBT-1130
S591088303	108.00	135.00	35.80	11.92	5.96	5.96	NBR/FABRIC	SBT-2068
S59110L501	110.00	120.00	26.00	8.66	4.33	4.33	PU	PPA-1442

Vee pack height can be adjusted by increasing or reducing the numbers of centre rings (C). This calculation can be done by the height of 'C' shown in the table.

Bold sizes are readily available in stock.

Other materials are available on request.

S59

Single Acting Rod Vee Pack

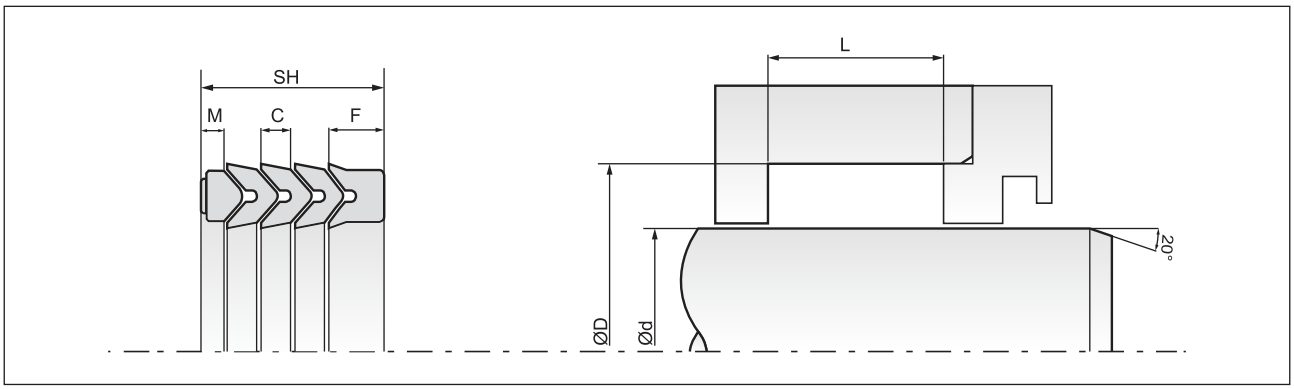

Part No.	d (h9)	D (H9)	SH (Stack Ht.)	F	C	M	Material	Mould No.
S591108313	**110.00**	**125.00**	**22.50**	**7.50**	**3.75**	**3.75**	**NBR/FABRIC**	**SBT-2092**
S591108515	110.00	125.00	30.00	10.00	5.00	5.00	FKM/FABRIC	SBT-740
S591108328	110.00	125.00	38.00	12.66	6.33	6.33	NBR/FABRIC	SBT-1038
S591108332	110.00	128.00	30.00	10.00	5.00	5.00	NBR/FABRIC	SBT-1194
S591108345	110.00	130.00	22.00	7.32	3.66	3.66	NBR/FABRIC	SBT-1475
S591108337	110.00	130.00	25.00	8.32	4.16	4.16	NBR/FABRIC	SBT-1811
S591108301	110.00	130.00	30.00	10.00	5.00	5.00	NBR/FABRIC	SBT-1211
S591108301	**110.00**	**130.00**	**30.00**	**10.00**	**5.00**	**5.00**	**NBR/FABRIC**	**SBT-2089**
S591108340	110.00	130.00	32.00	10.66	5.33	5.33	NBR/FABRIC	SBT-160
S591108307	110.00	130.00	32.00	10.66	5.33	5.33	NBR/FABRIC	SBT-840
S591108338	110.00	130.00	33.00	11.00	5.50	5.50	NBR/FABRIC	SBT-1826
S591108303	110.00	130.00	34.50	11.50	5.75	5.75	FKM/FABRIC	SBT-1598
S591108341	110.00	130.00	38.00	12.66	6.33	6.33	FKM/FABRIC	SBT-2124
S591108517	110.00	130.00	38.00	12.66	6.33	6.33	FKM/FABRIC	SBT-2898
S591108346	110.00	134.00	42.00	14.00	7.00	7.00	NBR/FABRIC	SBT-2273
S591108342	110.00	135.00	35.00	11.66	5.83	5.83	NBR/FABRIC	SBT-2140
S591108306	**110.00**	**135.00**	**40.00**	**13.32**	**6.66**	**6.66**	**NBR/FABRIC**	**SBT-721**
S591108344	110.00	135.00	40.50	13.50	6.75	6.75	NBR/FABRIC	SBT-2202
S591108304	110.00	135.00	41.46	13.82	6.91	6.91	NBR/FABRIC	SBT-2090
S591108310	110.00	135.00	42.50	14.16	7.08	7.08	NBR	SBT-2538
S591108305	**110.00**	**135.00**	**42.72**	**14.24**	**7.12**	**7.12**	**NBR/FABRIC**	**SBT-2091**
S591108335	110.00	140.00	40.00	13.32	6.66	6.66	NBR/FABRIC	SBT-262
S591108322	**110.00**	**140.00**	**45.00**	**15.00**	**7.50**	**7.50**	**NBR/FABRIC**	**SBT-2093**
S591108331	110.00	145.00	80.00	26.66	13.33	13.33	NBR/FABRIC	SBT-1143
S591128301	112.00	133.50	36.00	12.00	6.00	6.00	NBR/FABRIC	SBT-1686
S591148329	114.00	130.00	21.70	7.22	3.61	3.61	NBR/FABRIC	SBT-3065
S591148327	114.00	132.00	24.00	8.00	4.00	4.00	NBR/FABRIC	SBT-2344
S591148324	114.00	133.00	32.00	10.66	5.33	5.33	NBR/FABRIC	SBT-1983
S591148318	114.00	136.50	35.00	11.66	5.83	5.83	NBR/FABRIC	SBT-1088
S591148323	114.00	152.00	57.00	19.00	9.50	9.50	NBR/FABRIC	SBT-1812
S591148320	114.30	133.35	50.80	16.92	8.46	8.46	NBR/FABRIC	SBT-1568
S591148501	114.30	135.89	50.80	16.92	8.46	8.46	FKM/FABRIC	SBT-1941
S591148317	114.30	136.52	49.60	16.52	8.26	8.26	NBR/FABRIC	SBT-407
S591148305	114.30	139.70	31.75	10.58	5.29	5.29	NBR/FABRIC	SBT-957
S591158318	115.00	130.00	30.00	10.00	5.00	5.00	NBR/FABRIC	SBT-569
S591158319	115.00	130.00	45.00	15.00	7.50	7.50	NBR/FABRIC	SBT-1286
S591158317	115.00	140.00	30.00	10.00	5.00	5.00	NBR/FABRIC	SBT-103
S591158303	115.00	140.00	34.00	11.32	5.66	5.66	NBR/FABRIC	SBT-1600
S591158301	**115.00**	**140.00**	**37.08**	**12.36**	**6.18**	**6.18**	**NBR/FABRIC**	**SBT-2094**
S591158320	115.00	142.00	35.00	11.66	5.83	5.83	NBR/FABRIC	SBT-2619
S591208311	120.00	140.00	28.00	9.32	4.66	4.66	NBR/FABRIC	SBT-197
S591208319	120.00	140.00	30.00	10.00	5.00	5.00	NBR/FABRIC	SBT-1834
S591208503	120.00	140.00	30.00	10.00	5.00	5.00	FKM/FABRIC	SBT-2019
S591208321	120.00	144.50	28.60	9.52	4.76	4.76	NBR/FABRIC	SBT-1940
S591208502	120.00	145.00	34.50	11.50	5.75	5.75	FKM/FABRIC	SBT-1945
S591208304	**120.00**	**145.00**	**36.36**	**12.12**	**6.06**	**6.06**	**NBR/FABRIC**	**SBT-2095**
S591208305	**120.00**	**150.00**	**38.22**	**12.74**	**6.37**	**6.37**	**NBR/FABRIC**	**SBT-2096**
S591208333	120.65	139.70	38.10	12.70	6.35	6.35	NBR/FABRIC	SBT-1089
S591228301	122.00	144.00	38.00	12.66	6.33	6.33	NBR/FABRIC	SBT-2219
S591248301	124.00	140.00	40.00	13.32	6.66	6.66	NBR/FABRIC	SBT-2239
S591248302	124.00	146.00	36.00	12.00	6.00	6.00	NBR/FABRIC	SBT-3024
S591258304	**125.00**	**140.00**	**22.68**	**7.54**	**3.77**	**3.77**	**NBR/FABRIC**	**SBT-2098**

Vee pack height can be adjusted by increasing or reducing the numbers of centre rings (C). This calculation can be done by the height of 'C' shown in the table.
Bold sizes are readily available in stock.
Other materials are available on request.

S59

Single Acting Rod Vee Pack

MAX SPARE LIMITED
QUALITY. PRECISION. SPEED.

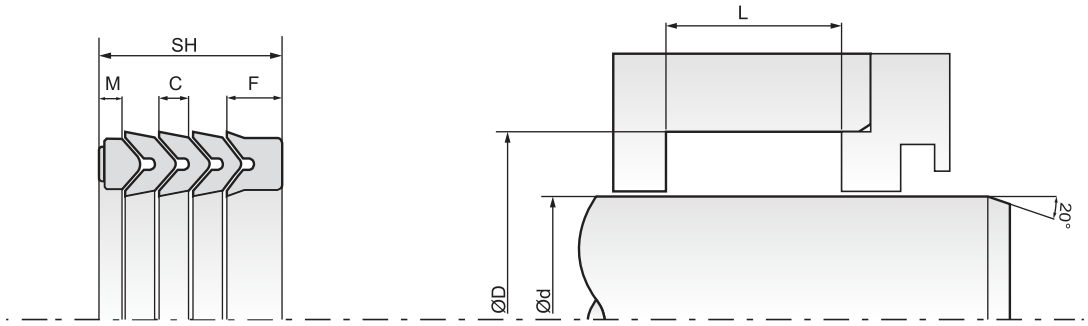

Part No.	d (h9)	D (H9)	SH (Stack Ht.)	F	C	M	Material	Mould No.
S591258330	125.00	144.50	40.00	13.32	6.66	6.66	NBR/FABRIC	SBT-1573
S59125X201	125.00	145.00	32.00	10.66	5.33	5.33	GLT	SBT-1440
S591258602	125.00	145.00	32.00	10.66	5.33	5.33	FKM/FABRIC	SBT-972
S591258323	**125.00**	**145.00**	**33.72**	**11.24**	**5.62**	**5.62**	**NBR/FABRIC**	**SBT-2099**
S591258303	**125.00**	**150.00**	**27.36**	**9.12**	**4.56**	**4.56**	**NBR/FABRIC**	**SBT-2097**
S591258326	125.00	150.00	35.50	11.82	5.91	5.91	NBR/FABRIC	SBT-1850
S591258505	125.00	150.00	42.50	14.16	7.08	7.08	FKM/FABRIC	SBT-1500
S591258313	125.00	150.00	43.00	14.32	7.16	7.16	NBR/FABRIC	SBT-809
S591258313	125.00	150.00	43.00	14.32	7.16	7.16	NBR/FABRIC	SBT-3022
S591258329	125.00	150.00	98.00	32.66	16.33	16.33	NBR/FABRIC	SBT-530
S591258325	125.00	155.00	34.50	11.50	5.75	5.75	NBR/FABRIC	SBT-1090
S591268301	126.00	150.00	40.00	13.32	6.66	6.66	NBR/FABRIC	SBT-1135
S591278319	127.00	147.00	40.00	13.32	6.66	6.66	NBR/FABRIC	SBT-2441
S591278502	127.00	149.22	29.36	9.78	4.89	4.89	FKM/FABRIC	SBT-2652
S59127K201	127.00	151.00	25.40	8.46	4.23	4.23	NBR/FABRIC	SBT-1200
S591278503	127.00	151.00	25.40	8.46	4.23	4.23	FKM/FABRIC	SBT-3091
S591278317	127.00	152.40	34.92	11.64	5.82	5.82	NBR/FABRIC	SBT-232
S591278501	**127.00**	**152.40**	**38.60**	**12.86**	**6.43**	**6.43**	**NBR/FABRIC**	**SBT-2100**
S591278303	127.00	152.40	44.45	14.80	7.40	7.40	NBR/FABRIC	SBT-1393
S591278316	127.00	152.40	44.45	14.80	7.40	7.40	NBR/FABRIC	SBT-1804
S591278318	127.00	152.50	40.00	13.32	6.66	6.66	NBR/FABRIC	SBT-2256
S591272101	127.00	153.00	32.00	10.66	5.33	5.33	CR/FABRIC	SBT-1495
S591271001	127.70	153.10	31.75	10.58	5.29	5.29	NBR/FABRIC	SBT-982
S591288305	128.00	152.00	40.00	13.32	6.66	6.66	NBR/FABRIC	SBT-2477
S591288303	128.00	153.00	32.00	10.66	5.33	5.33	NBR/FABRIC	SBT-938
S59128L501	128.00	153.00	32.00	10.66	5.33	5.33	PU	PPA-1422
S591298301	129.00	156.00	40.00	13.32	6.66	6.66	NBR/FABRIC	SBT-1175
S591308301	**130.00**	**150.00**	**30.00**	**10.00**	**5.00**	**5.00**	**NBR/FABRIC**	**SBT-2103**
S591308302	130.00	155.00	33.00	11.00	5.50	5.50	NBR/FABRIC	SBT-1601
S591308302	**130.00**	**155.00**	**39.96**	**13.32**	**6.66**	**6.66**	**NBR/FABRIC**	**SBT-2101**
S591308507	130.00	160.00	28.00	9.32	4.66	4.66	NBR/FABRIC	SBT-2450
S591308308	130.00	160.00	30.00	10.00	5.00	5.00	NBR/FABRIC	SBT-228
S591308322	130.00	160.00	34.00	11.32	5.66	5.66	NBR/FABRIC	PPA-947
S591308303	**130.00**	**160.00**	**43.50**	**14.50**	**7.25**	**7.25**	**NBR/FABRIC**	**SBT-2102**
S591308502	130.00	160.00	55.00	18.32	9.16	9.16	FKM/FABRIC	SBT-2897
S591308331	130.65	155.00	36.50	12.16	6.08	6.08	NBR/FABRIC	SBT-2629
S591328301	132.00	157.00	45.50	15.16	7.58	7.58	NBR/FABRIC	SBT-1676
S591338302	133.00	165.00	55.00	18.32	9.16	9.16	NBR/FABRIC	SBT-2245
S591338301	133.35	165.10	46.48	15.48	7.74	7.74	NBR/FABRIC	SBT-1968
S59134D501	134.00	160.00	42.00	14.00	7.00	7.00	HNBR/FABRIC	SBT-2571
S591358401	135.00	160.00	35.00	11.66	5.83	5.83	NBR/FABRIC	SBT-3235
S591358303	**135.00**	**160.00**	**42.00**	**14.00**	**7.00**	**7.00**	**NBR/FABRIC**	**SBT-2104**
S591358307	135.00	160.00	45.00	15.00	7.50	7.50	NBR/FABRIC	SBT-1884
S591358305	135.00	165.00	31.50	10.50	5.25	5.25	NBR/FABRIC	SBT-1370
S591358306	135.00	165.00	31.50	10.50	5.25	5.25	PU	PPA-926
S591358402	135.00	165.00	31.50	10.50	5.25	5.25	NBR/FABRIC	SBT-1964
S591368301	136.40	168.30	36.00	12.00	6.00	6.00	NBR/FABRIC	SBT-585
S591388301	138.00	180.00	50.00	16.66	8.33	8.33	NBR/FABRIC	SBT-1379
S591398306	139.00	165.00	48.00	16.00	8.00	8.00	NBR/FABRIC	SBT-3228
S591398303	139.70	152.40	16.00	5.32	2.66	2.66	NBR/FABRIC	SBT-422
S591398305	139.70	160.00	21.50	7.16	3.58	3.58	NBR/FABRIC	SBT-2161
S591398301	139.70	165.10	37.30	12.42	6.21	6.21	NBR/FABRIC	SBT-835

Vee pack height can be adjusted by increasing or reducing the numbers of centre rings (C). This calculation can be done by the height of 'C' shown in the table.

Bold sizes are readily available in stock.

Other materials are available on request.

S59

Single Acting Rod Vee Pack

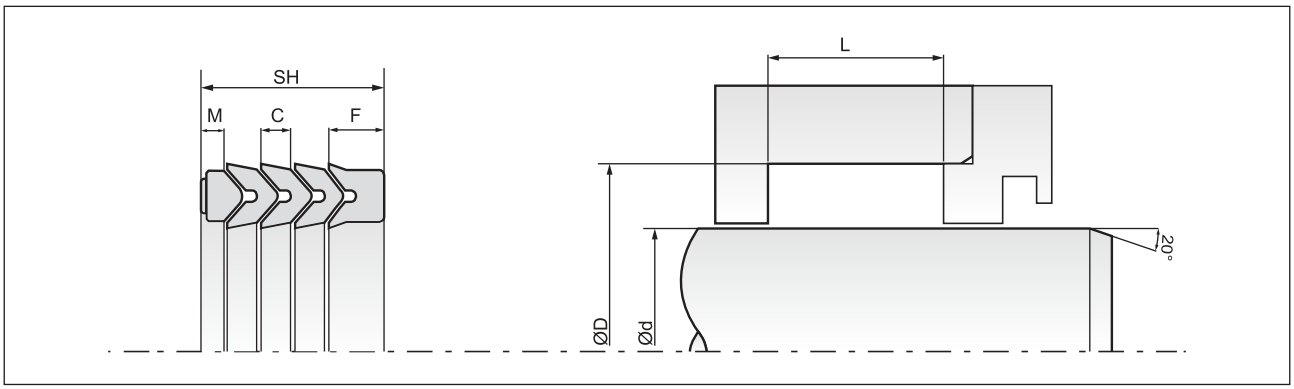

Part No.	d (h9)	D (H9)	SH (Stack Ht.)	F	C	M	Material	Mould No.
S591408315	**140.00**	**155.00**	**25.50**	**8.50**	**4.25**	**4.25**	**NBR/FABRIC**	**SBT-2107**
S591408404	140.00	155.00	26.00	8.66	4.33	4.33	NBR/FABRIC	SBT-3234
S591408326	140.00	155.00	31.00	10.32	5.16	5.16	NBR/FABRIC	SBT-1239
S591408341	140.00	158.00	40.00	13.32	6.66	6.66	NBR/FABRIC	SBT-2338
S591408304	**140.00**	**160.00**	**30.00**	**10.00**	**5.00**	**5.00**	**NBR/FABRIC**	**SBT-2106**
S591408328	140.00	160.00	32.00	10.66	5.33	5.33	NBR/FABRIC	SBT-1380
S591408502	140.00	160.00	35.00	11.66	5.83	5.83	NBR/FABRIC	SBT-981
S591408336	140.00	165.00	24.00	8.00	4.00	4.00	NBR/FABRIC	SBT-1777
S591408511	140.00	165.00	37.35	12.44	6.22	6.22	FKM/FABRIC	SBT-1132
S591408323	140.00	165.00	40.00	13.32	6.66	6.66	NBR/FABRIC	SBT-1094
S591408302	140.00	165.00	41.95	13.98	6.99	6.99	NBR/FABRIC	SBT-189
S591408344	140.00	165.00	48.00	16.00	8.00	8.00	NBR/FABRIC	SBT-560
S591408322	140.00	165.00	80.00	26.66	13.33	13.33	NBR/FABRIC	SBT-1079
S591408303	**140.00**	**170.00**	**32.94**	**10.98**	**5.49**	**5.49**	**NBR/FABRIC**	**SBT-2105**
S591408335	140.00	170.00	43.95	14.64	7.32	7.32	NBR/FABRIC	SBT-602
S591401201	140.00	170.00	52.00	17.32	8.66	8.66	NBR/FABRIC	SBT-2402
S591408305	140.00	180.00	35.00	11.66	5.83	5.83	NBR/FABRIC	SBT-1587
S591428301	142.00	162.00	25.00	8.32	4.16	4.16	NBR/FABRIC	SBT-1527
S591458308	145.00	165.00	30.00	10.00	5.00	5.00	NBR/FABRIC	SBT-1697
S591458301	**145.00**	**170.00**	**38.10**	**12.70**	**6.35**	**6.35**	**NBR/FABRIC**	**SBT-2108**
S591458305	145.00	170.00	40.50	13.50	6.75	6.75	NBR/FABRIC	SBT-916
S591458307	145.00	170.00	42.00	14.00	7.00	7.00	NBR/FABRIC	SBT-737
S591468308	146.00	176.00	45.00	15.00	7.50	7.50	NBR/FABRIC	SBT-1848
S591468503	146.05	171.45	30.88	10.28	5.14	5.14	FKM/FABRIC	SBT-1493
S591468305	146.05	171.45	31.75	10.58	5.29	5.29	NBR/FABRIC	SBT-1808
S591468307	146.05	171.45	38.10	12.70	6.35	6.35	NBR/FABRIC	SBT-1560
S591488301	148.00	170.00	42.00	14.00	7.00	7.00	NBR/FABRIC	SBT-2153
S591488302	148.00	185.00	50.00	16.66	8.33	8.33	NBR/FABRIC	SBT-2055
S591508331	150.00	170.00	40.00	13.32	6.66	6.66	NBR/FABRIC	SBT-297
S591508307	150.00	175.00	40.00	13.32	6.66	6.66	FKM/FABRIC	SBT-522
S591508302	150.00	175.00	42.50	14.16	7.08	7.08	NBR/FABRIC	SBT-1707
S591508327	150.00	178.00	45.00	15.00	7.50	7.50	NBR/FABRIC	SBT-1927
S591508511	150.00	180.00	30.50	10.16	5.08	5.08	FKM/FABRIC	SBT-1214
S591508334	150.00	180.00	31.50	10.50	5.25	5.25	NBR/FABRIC	SBT-2702
S591508330	150.00	180.00	38.00	12.66	6.33	6.33	NBR/FABRIC	SBT-2123
S591508304	**150.00**	**180.00**	**43.50**	**14.50**	**7.25**	**7.25**	**NBR/FABRIC**	**SBT-2109**
S591505901	150.00	180.00	43.50	14.50	7.25	7.25	PU	PPA-2599
S591508507	150.00	180.00	51.00	17.00	8.50	8.50	FKM/FABRIC	SBT-1426
S591508319	150.00	180.20	32.00	10.66	5.33	5.33	NBR/FABRIC	SBT-1172
S591528314	152.00	178.00	32.00	10.66	5.33	5.33	NBR/FABRIC	SBT-1837
S591528301	**152.40**	**177.80**	**33.30**	**11.10**	**5.55**	**5.55**	**NBR/FABRIC**	**SBT-2110**
S591548301	154.00	194.00	66.00	22.00	11.00	11.00	NBR/FABRIC	SBT-2969
S591558305	155.00	175.00	50.00	16.66	8.33	8.33	NBR/FABRIC	SBT-2366
S591558401	155.00	185.00	49.00	16.32	8.16	8.16	NBR/FABRIC	SBT-3236
S591558304	155.57	187.32	50.80	16.92	8.46	8.46	NBR/FABRIC	SBT-2305
S591578301	157.93	184.55	35.90	11.96	5.98	5.98	NBR/FABRIC	SBT-1487
S591588302	158.75	190.50	46.83	15.60	7.80	7.80	NBR/FABRIC	SBT-1009
S591588305	158.75	190.50	50.80	16.92	8.46	8.46	NBR/FABRIC	SBT-2635
S591598301	159.00	185.00	39.00	13.00	6.50	6.50	NBR/FABRIC	SBT-1018
S591608507	**160.00**	**180.00**	**30.50**	**10.16**	**5.08**	**5.08**	**NBR/FABRIC**	**SBT-2111**
S591608318	160.00	185.00	25.00	8.32	4.16	4.16	NBR/FABRIC	SBT-1343
S591608320	160.00	185.00	37.00	12.32	6.16	6.16	NBR/FABRIC	SBT-1363

Vee pack height can be adjusted by increasing or reducing the numbers of centre rings (C). This calculation can be done by the height of 'C' shown in the table.
Bold sizes are readily available in stock.

Other materials are available on request.

S59

Single Acting Rod Vee Pack

MAX SPARE LIMITED
QUALITY. PRECISION. SPEED.

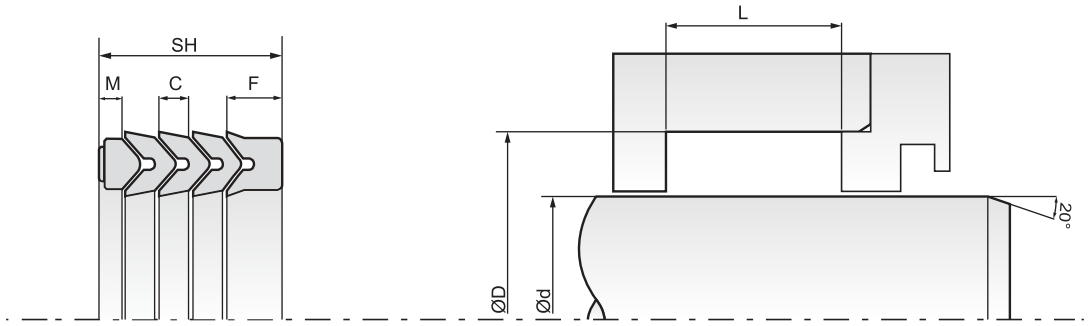

Part No.	d (h9)	D (H9)	SH (Stack Ht.)	F	C	M	Material	Mould No.
S591608320	160.00	185.00	37.00	12.32	6.16	6.16	PU	PPA-896
S591608314	160.00	185.00	40.00	13.32	6.66	6.66	NBR/FABRIC	SBT-183
S591608323	160.00	185.00	42.00	14.00	7.00	7.00	NBR/FABRIC	SBT-1822
S591608302	**160.00**	**190.00**	**32.94**	**10.98**	**5.49**	**5.49**	**NBR/FABRIC**	**SBT-2112**
S591608329	160.00	190.00	32.94	10.98	5.49	5.49	NBR/FABRIC	SBT-2978
S591608319	160.00	190.00	37.50	12.50	6.25	6.25	NBR/FABRIC	SBT-1349
S591608326	160.00	190.00	44.00	14.66	7.33	7.33	NBR/FABRIC	SBT-2231
S591808306	160.00	190.00	50.00	16.66	8.33	8.33	NBR/FABRIC	SBT-106
S591608315	160.00	192.00	60.00	20.00	10.00	10.00	NBR/FABRIC	SBT-776
S591658501	165.00	190.00	37.50	12.50	6.25	6.25	FKM/FABRIC	SBT-1530
S591651001	165.00	195.00	30.00	10.00	5.00	5.00	NBR	SBT-1785
S591658502	165.00	195.00	40.00	13.32	6.66	6.66	FKM/FABRIC	SBT-2262
S591658304	165.10	196.85	50.87	16.94	8.47	8.47	NBR/FABRIC	SBT-1080
S591708315	170.00	190.00	28.00	9.32	4.66	4.66	NBR/FABRIC	SBT-959
S591708317	170.00	190.00	34.20	11.40	5.70	5.70	NBR/FABRIC	SBT-1010
S591708321	170.00	195.00	33.00	11.00	5.50	5.50	NBR/FABRIC	SBT-1572
S591708319	170.00	195.00	40.50	13.50	6.75	6.75	NBR/FABRIC	SBT-1312
S591708316	170.00	198.00	50.00	16.66	8.33	8.33	NBR/FABRIC	SBT-995
S591708502	170.00	200.00	32.00	10.66	5.33	5.33	FKM/FABRIC	SBT-1458
S591708328	170.00	200.00	35.00	11.66	5.83	5.83	NBR/FABRIC	SBT-2911
S591708303	**170.00**	**200.00**	**49.08**	**16.36**	**8.18**	**8.18**	**NBR/FABRIC**	**SBT-2113**
S591708324	170.00	200.00	49.50	16.50	8.25	8.25	NBR	SBT-212
S591708326	170.00	220.00	60.00	20.00	10.00	10.00	NBR/FABRIC	SBT-2224
S591708304	170.65	200.02	49.00	16.32	8.16	8.16	NBR/FABRIC	SBT-1619
S591718306	**171.45**	**203.20**	**30.00**	**10.00**	**5.00**	**5.00**	**NBR/FABRIC**	**SBT-2114**
S591718301	171.45	207.69	50.80	16.92	8.46	8.46	NBR/FABRIC	SBT-2146
S591738301	173.00	203.20	31.00	10.32	5.16	5.16	NBR/FABRIC	SBT-1814
S591748301	174.62	193.67	34.92	11.64	5.82	5.82	NBR/FABRIC	SBT-1148
S591758301	175.00	200.00	42.00	14.00	7.00	7.00	FKM/FABRIC	SBT-178
S591768301	176.70	203.20	22.00	7.32	3.66	3.66	NBR/FABRIC	SBT-1856
S591778311	177.80	190.50	25.40	8.46	4.23	4.23	NBR/FABRIC	SBT-2004
S591778301	177.80	203.20	32.54	10.82	5.41	5.41	NBR/FABRIC	SBT-839
S591778309	177.80	209.55	60.96	20.32	10.16	10.16	NBR/FABRIC	SBT-868
S591778312	177.80	215.90	57.15	19.04	9.52	9.52	NBR/FABRIC	SBT-2214
S591808333	180.00	195.00	60.00	20.00	10.00	10.00	NBR/FABRIC	SBT-1995
S591808308	**180.00**	**200.00**	**30.00**	**10.00**	**5.00**	**5.00**	**NBR/FABRIC**	**SBT-2116**
S591808337	180.00	200.00	32.00	10.66	5.33	5.33	NBR/FABRIC	SBT-1710
S591808304	180.00	200.00	40.00	13.32	6.66	6.66	NBR/FABRIC	SBT-164
S591808324	180.00	205.00	38.00	12.66	6.33	6.33	NBR/FABRIC	SBT-1171
S591808512	180.00	205.00	40.00	13.32	6.66	6.66	FKM/FABRIC	SBT-555
S591808303	**180.00**	**210.00**	**45.72**	**15.24**	**7.62**	**7.62**	**NBR/FABRIC**	**SBT-2115**
S591808335	180.00	210.00	50.00	16.66	8.33	8.33	NBR/FABRIC	SBT-774
S591808514	180.00	210.00	60.00	20.00	10.00	10.00	FKM/FABRIC	SBT-2007
S591808329	180.00	210.00	82.00	27.32	13.66	13.66	NBR/FABRIC	SBT-1490
S591808509	180.00	220.00	31.80	10.60	5.30	5.30	FKM/FABRIC	SBT-1338
S591808513	180.00	220.00	60.00	20.00	10.00	10.00	FKM/FABRIC	SBT-1992
S591848305	184.15	171.45	19.05	6.34	3.17	3.17	NBR/FABRIC	SBT-2429
S591848304	184.15	203.20	40.00	13.32	6.66	6.66	NBR/FABRIC	SBT-842
S591858304	185.00	210.00	32.60	10.86	5.43	5.43	NBR/FABRIC	SBT-818
S591858306	185.00	217.00	36.00	12.00	6.00	6.00	NBR/FABRIC	SBT-2026
S591868301	186.00	216.00	55.00	18.32	9.16	9.16	NBR/FABRIC	SBT-1633
S59188314	188.50	220.00	35.50	11.82	5.91	5.91	NBR/FABRIC	SBT-2289

Vee pack height can be adjusted by increasing or reducing the numbers of centre rings (C). This calculation can be done by the height of 'C' shown in the table.

Bold sizes are readily available in stock.

Other materials are available on request.

S59

Single Acting Rod Vee Pack

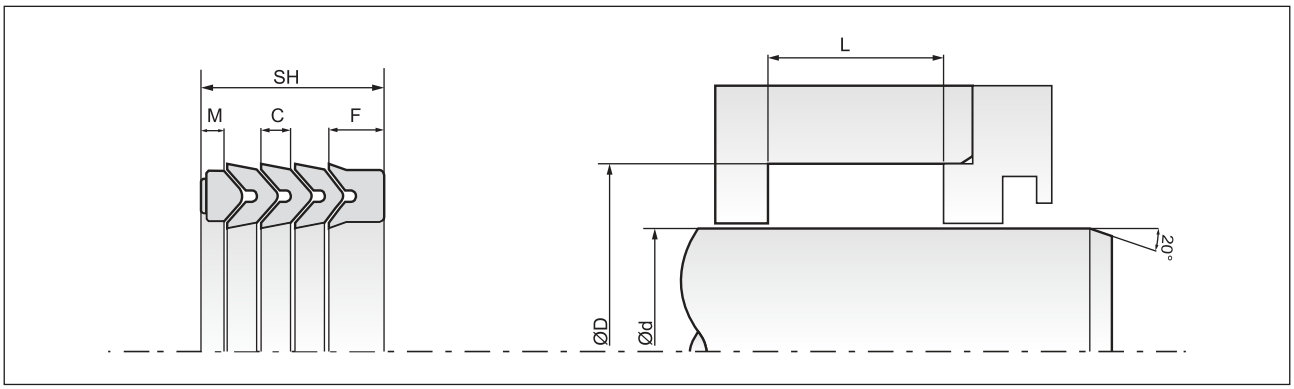

Part No.	d (h9)	D (H9)	SH (Stack Ht.)	F	C	M	Material	Mould No.
S591908314	190.00	220.00	40.00	13.32	6.66	6.66	NBR/FABRIC	SBT-1936
S591908501	190.50	222.25	50.00	16.66	8.33	8.33	FKM/FABRIC	SBT-770
S591958301	195.00	225.00	45.00	15.00	7.50	7.50	NBR/FABRIC	SBT-2557
S591968301	196.90	235.00	98.50	32.82	16.41	16.41	NBR/FABRIC	SBT-1531
S592008502	200.00	220.00	30.00	10.00	5.00	5.00	FKM/FABRIC	SBT-1158
S592008322	200.00	225.00	42.50	14.16	7.08	7.08	NBR/FABRIC	SBT-1757
S592008323	200.00	229.60	53.00	17.66	8.83	8.83	NBR/FABRIC	SBT-1786
S592008304	**200.00**	**230.00**	**33.72**	**11.24**	**5.62**	**5.62**	**NBR/FABRIC**	**SBT-2117**
S592008316	200.00	230.00	48.00	16.00	8.00	8.00	NBR/FABRIC	SBT-935
S592008325	200.00	230.00	48.50	16.16	8.08	8.08	NBR/FABRIC	SBT-1924
S592008305	200.00	230.00	50.00	16.66	8.33	8.33	NBR/FABRIC	SBT-2500
S592008401	200.00	230.00	50.50	16.82	8.41	8.41	NBR/FABRIC	SBT-1714
S592008319	200.00	232.00	50.50	16.82	8.41	8.41	NBR/FABRIC	SBT-1072
S592008320	200.00	235.00	45.00	15.00	7.50	7.50	NBR/FABRIC	SBT-2012
S592018301	201.00	241.00	49.00	16.32	8.16	8.16	NBR/FABRIC	SBT-1688
S592028301	202.00	225.00	25.00	8.32	4.16	4.16	NBR/FABRIC	SBT-1344
S592028303	202.00	235.00	52.00	17.32	8.66	8.66	NBR/FABRIC	SBT-2610
S592028302	202.50	234.50	51.00	17.00	8.50	8.50	NBR/FABRIC	SBT-2039
S592038310	203.00	235.00	50.00	16.66	8.33	8.33	NBR/FABRIC	SBT-2394
S592038301	203.20	228.60	50.80	16.92	8.46	8.46	NBR/FABRIC	SBT-1071
S592038501	203.20	233.20	44.00	14.66	7.33	7.33	FKM/FABRIC	SBT-3224
S592038311	203.20	234.95	41.91	13.96	6.98	6.98	NBR/FABRIC	SBT-2555
S592038309	203.20	234.95	61.92	20.64	10.32	10.32	NBR/FABRIC	SBT-1861
S592038401	203.20	235.50	62.00	20.66	10.33	10.33	NBR/FABRIC	SBT-3174
S592038306	203.20	241.30	41.27	13.74	6.87	6.87	NBR/FABRIC	SBT-1151
S592058309	205.00	230.00	40.00	13.32	6.66	6.66	NBR/FABRIC	SBT-464
S592058308	205.00	235.00	46.00	15.32	7.66	7.66	NBR/FABRIC	SBT-1807
S592068501	206.00	225.00	19.00	6.32	3.16	3.16	FKM/FABRIC	SBT-2175
S592108304	210.00	240.00	33.50	11.16	5.58	5.58	NBR/FABRIC	SBT-1551
S592108303	210.00	240.00	34.50	11.50	5.75	5.75	NBR/FABRIC	SBT-255
S592108307	210.00	240.00	42.10	14.00	7.00	7.00	NBR/FABRIC	SBT-195
S592108310	210.00	242.00	34.00	11.32	5.66	5.66	NBR/FABRIC	SBT-2264
S592108313	210.00	243.00	44.00	14.66	7.33	7.33	NBR/FABRIC	SBT-2446
S592128302	212.72	231.77	34.92	11.64	5.82	5.82	NBR/FABRIC	SBT-1149
S592138401	213.00	233.00	28.00	9.32	4.66	4.66	NBR/FABRIC	SBT-694
S592148302	214.00	240.00	40.00	13.32	6.66	6.66	NBR/FABRIC	SBT-1810
S592148301	214.00	247.00	51.00	17.00	8.50	8.50	NBR/FABRIC	SBT-1022
S592158503	215.00	230.00	35.00	11.66	5.83	5.83	FKM/FABRIC	SBT-1963
S592158306	215.00	245.00	41.00	13.66	6.83	6.83	NBR/FABRIC	SBT-915
S592158502	215.00	245.00	42.50	14.16	7.08	7.08	FKM/FABRIC	SBT-1339
S592158308	215.00	248.00	50.00	16.66	8.33	8.33	NBR/FABRIC	SBT-1021
S592152101	215.00	250.00	52.00	17.32	8.66	8.66	CR/FABRIC	SBT-1722
S592158307	215.90	247.65	50.80	16.92	8.46	8.46	NBR/FABRIC	SBT-969
S592158311	215.90	250.00	52.00	17.32	8.66	8.66	NBR/FABRIC	SBT-1869
S592158313	215.90	255.57	50.80	16.92	8.46	8.46	NBR/FABRIC	SBT-2486
S592168301	216.00	242.00	40.00	13.32	6.66	6.66	NBR/FABRIC	SBT-1297
S592178301	217.00	255.70	38.00	12.66	6.33	6.33	NBR/FABRIC	SBT-1705
S592188301	218.00	250.00	32.00	10.66	5.33	5.33	NBR/FABRIC	SBT-2074
S592198301	219.00	250.00	39.00	13.00	6.50	6.50	NBR/FABRIC	SBT-2546
S592208309	220.00	240.00	40.00	13.32	6.66	6.66	NBR/FABRIC	SBT-816
S592208326	220.00	250.00	34.00	11.32	5.66	5.66	NBR/FABRIC	SBT-3061
S592208312	220.00	250.00	39.50	13.16	6.58	6.58	PU	PPA-927

Vee pack height can be adjusted by increasing or reducing the numbers of centre rings (C). This calculation can be done by the height of 'C' shown in the table.
Bold sizes are readily available in stock.
Other materials are available on request.

S59

Single Acting Rod Vee Pack

MAX SPARE LIMITED
QUALITY. PRECISION. SPEED.

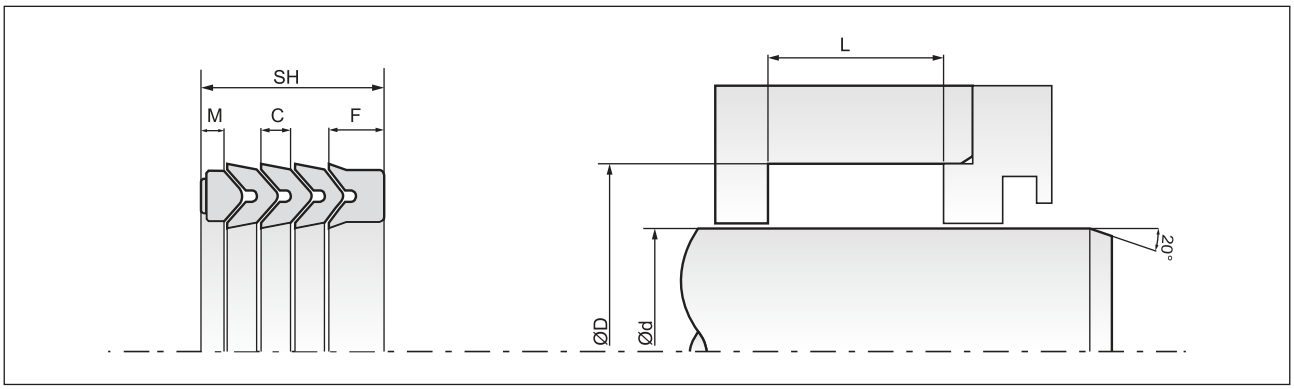

Part No.	d (h9)	D (H9)	SH (Stack Ht.)	F	C	M	Material	Mould No.
S592208302	220.00	250.00	40.00	13.32	6.66	6.66	NBR/FABRIC	SBT-105
S592208511	220.00	250.00	51.00	17.00	8.50	8.50	FKM/FABRIC	SBT-2370
S59222D601	222.00	255.00	22.00	7.32	3.66	3.66	HNBR/FABRIC	SBT-926
S592238301	223.00	255.00	52.50	17.50	8.75	8.75	NBR/FABRIC	SBT-3064
S592248301	224.45	255.00	38.00	12.66	6.33	6.33	NBR/FABRIC	SBT-1685
S592258302	225.00	240.00	25.00	8.32	4.16	4.16	NBR/FABRIC	SBT-2145
S592258501	225.00	250.00	41.00	13.66	6.83	6.83	FKM/FABRIC	SBT-1769
S592288304	228.00	268.00	45.00	15.00	7.50	7.50	NBR/FABRIC	SBT-1651
S592288305	228.60	254.00	38.89	12.96	6.48	6.48	NBR/FABRIC	SBT-2624
S592288302	228.60	260.34	48.42	16.14	8.07	8.07	NBR/FABRIC	SBT-1014
S592298301	229.00	255.00	35.00	11.66	5.83	5.83	NBR/FABRIC	SBT-1187
S592388301	238.12	254.00	31.75	10.58	5.29	5.29	NBR/FABRIC	SBT-2358
S592408303	240.00	270.00	47.00	15.66	7.83	7.83	NBR/FABRIC	SBT-1980
S592408304	240.00	280.00	60.00	20.00	10.00	10.00	NBR/FABRIC	SBT-911
S592408305	240.00	280.00	67.50	22.50	11.25	11.25	NBR/FABRIC	SBT-1091
S59241K101	241.30	254.00	31.75	10.58	5.29	5.29	HYT	PPA-2272
S592418401	241.30	273.05	31.75	10.58	5.29	5.29	NBR/FABRIC	SBT-3164
S592508301	250.00	270.00	32.00	10.66	5.33	5.33	NBR/FABRIC	SBT-861
S592508503	250.00	280.00	33.50	11.16	5.58	5.58	NBR/FABRIC	SBT-1340
S592508501	250.00	280.00	38.70	12.90	6.45	6.45	FKM/FABRIC	SBT-1049
S592508509	250.00	280.00	45.50	15.16	7.58	7.58	FKM	SBT-2297
S592508508	250.00	280.00	46.50	15.50	7.75	7.75	FKM/FABRIC	SBT-2295
S592508329	250.00	280.00	50.00	16.66	8.33	8.33	NBR/FABRIC	SBT-1617
S592506007	250.00	280.00	52.00	17.32	8.66	8.66	NYLON	PPA-1582
S592506004	250.00	280.00	52.00	17.32	8.66	8.66	CPU	CPU-143
S592506012	250.00	280.00	54.00	18.00	9.00	9.00	PU	PPA-3029
S592508332	250.00	280.00	55.00	18.32	9.16	9.16	NBR/FABRIC	SBT-1958
S592508303	**250.00**	**280.00**	**60.36**	**20.12**	**10.06**	**10.06**	**NBR/FABRIC**	**SBT-2118**
S592508303	250.00	280.00	60.50	20.16	10.08	10.08	NBR/FABRIC	SBT-864
S592508326	250.00	286.00	54.00	18.00	9.00	9.00	NBR/FABRIC	SBT-1357
S592508337	250.00	288.70	65.00	21.66	10.83	10.83	NBR/FABRIC	SBT-2280
S592508328	250.00	295.00	56.00	18.66	9.33	9.33	NBR/FABRIC	SBT-1532
S592508339	250.00	300.00	52.00	17.32	8.66	8.66	NBR/FABRIC	SBT-2968
S592508323	250.82	269.87	38.10	12.70	6.35	6.35	NBR/FABRIC	SBT-1150
S592558302	255.00	290.00	49.00	16.32	8.16	8.16	NBR/FABRIC	SBT-1108
S592578301	257.00	289.00	51.00	17.00	8.50	8.50	NBR/FABRIC	SBT-1843
S592598301	259.00	290.00	39.00	13.00	6.50	6.50	NBR/FABRIC	SBT-2548
S592608309	260.00	280.00	40.00	13.32	6.66	6.66	NBR/FABRIC	SBT-1942
S592608306	260.00	300.00	47.50	15.82	7.91	7.91	NBR/FABRIC	SBT-1125
S592608301	260.00	300.00	67.50	22.50	11.25	11.25	NBR/FABRIC	SBT-1092
S59263B301	263.00	296.00	45.50	15.16	7.58	7.58	NBR/FABRIC	SBT-3196
S592668401	266.70	298.45	41.27	13.74	6.87	6.87	NBR/FABRIC	SBT-3220
S592668301	266.70	298.45	57.15	19.04	9.52	9.52	NBR/FABRIC	SBT-1174
S592668303	266.70	306.40	59.53	19.84	9.92	9.92	NBR/FABRIC	SCT-896
S592668304	266.80	290.00	50.00	16.66	8.33	8.33	NBR/FABRIC	SBT-3023
S592678301	267.00	290.00	40.00	13.32	6.66	6.66	NBR/FABRIC	SBT-3108
S592688301	268.29	298.45	45.24	15.08	7.54	7.54	NBR/FABRIC	SBT-1300
S592691101	269.08	313.53	73.02	24.34	12.17	12.17	NBR/FABRIC	SCT-785
S592708310	270.00	300.00	39.50	13.16	6.58	6.58	NBR/FABRIC	SBT-2016
S592708308	270.00	300.00	40.00	13.32	6.66	6.66	NBR/FABRIC	SCT-772
S592708306	270.00	300.00	45.00	15.00	7.50	7.50	PU	PPA-895
S592708309	270.00	300.00	50.00	16.66	8.33	8.33	NBR/FABRIC	SBT-1990

Vee pack height can be adjusted by increasing or reducing the numbers of centre rings (C). This calculation can be done by the height of 'C' shown in the table.

Bold sizes are readily available in stock.

Other materials are available on request.

S59

Single Acting Rod Vee Pack

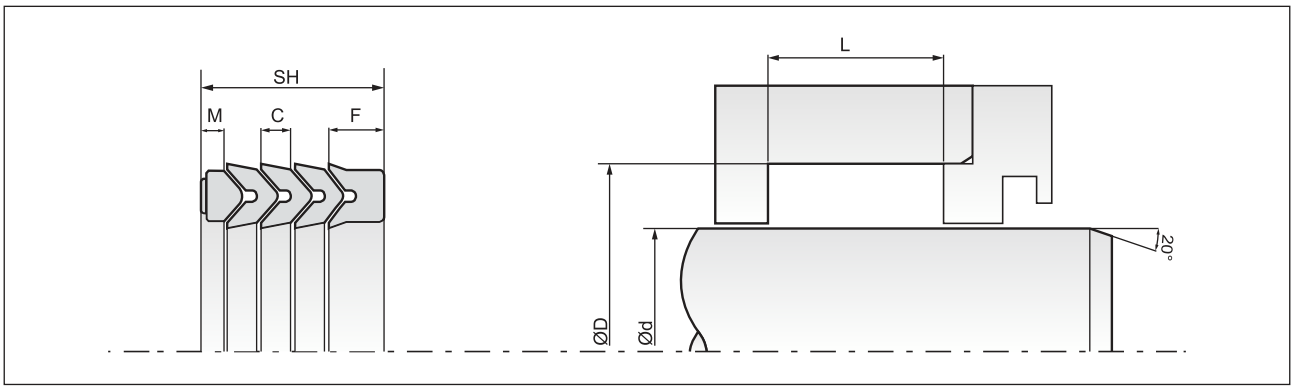

Part No.	d (h9)	D (H9)	SH (Stack Ht.)	F	C	M	Material	Mould No.
S592708311	270.00	300.00	75.00	25.00	12.50	12.50	NBR/FABRIC	SBT-1042
S592738301	273.05	304.80	50.80	16.92	8.46	8.46	NBR/FABRIC	SCT-458
S592738302	273.10	311.20	70.40	23.46	11.73	11.73	NBR/FABRIC	SCT-770
S592758301	275.00	305.00	52.40	17.46	8.73	8.73	NBR/FABRIC	SCT-457
S592768301	276.25	294.48	34.92	11.64	5.82	5.82	NBR/FABRIC	SBT-2359
S592788301	278.50	311.50	50.00	16.66	8.33	8.33	NBR/FABRIC	SCT-566
S592798304	279.00	310.00	50.50	16.82	8.41	8.41	NBR/FABRIC	SCT-761
S592798401	279.00	310.00	52.50	17.50	8.75	8.75	NBR/FABRIC	SCT-1105
S592798302	279.40	311.15	39.70	13.22	6.61	6.61	NBR/FABRIC	SCT-470
S592808311	280.00	310.00	45.00	15.00	7.50	7.50	NBR/FABRIC	SCT-475
S592808307	280.00	310.00	50.50	16.82	8.41	8.41	NBR/FABRIC	SCT-299
S592818501	281.50	320.00	61.00	20.20	10.10	10.10	FKM/FABRIC	SCT-608
S592828301	282.88	305.12	20.00	6.66	3.33	3.33	NBR/FABRIC	SCT-573
S592848301	284.00	316.40	52.00	17.32	8.66	8.66	NBR/FABRIC	SCT-460
S592858304	285.00	320.00	55.00	18.32	9.16	9.16	NBR/FABRIC	SCT-666
S592858501	285.75	304.80	31.75	10.58	5.29	5.29	FKM/FABRIC	SCT-674
S592908311	290.00	320.00	32.50	10.82	5.41	5.41	FKM/FABRIC	SCT-906
S592908315	290.00	320.00	41.50	13.82	6.91	6.91	NBR/FABRIC	SCT-130
S592908306	290.00	320.00	50.00	16.66	8.33	8.33	NBR/FABRIC	PPA-950
S592908501	290.00	320.00	52.00	17.32	8.66	8.66	FKM/FABRIC	SCT-368
S592908503	290.00	320.70	42.00	14.00	7.00	7.00	FKM/FABRIC	SCT-1095
S592908312	290.00	325.00	55.00	18.32	9.16	9.16	NBR/FABRIC	SCT-367
S592918301	291.80	330.20	50.80	16.92	8.46	8.46	NBR/FABRIC	SCT-1033
S592938301	293.00	335.00	45.00	15.00	7.50	7.50	NBR/FABRIC	SCT-1109
S592978401	297.00	340.00	50.00	16.66	8.33	8.33	NBR/FABRIC	SCT-1084
S592981101	298.45	336.55	57.15	19.04	9.52	9.52	NBR/FABRIC	SCT-784
S592988301	298.84	328.20	49.00	16.32	8.16	8.16	NBR/FABRIC	SCT-680
S593008301	300.00	320.00	32.00	10.66	5.33	5.33	NBR/FABRIC	SCT-401
S593008309	300.00	330.00	50.00	16.66	8.33	8.33	NBR/FABRIC	SCT-430
S593008312	300.00	330.00	50.00	16.66	8.33	8.33	NYLON	PPA-1679
S593008316	300.00	330.00	51.20	17.06	8.53	8.53	NBR/FABRIC	SCT-1071
S593008315	300.00	330.00	51.60	17.20	8.60	8.60	NBR/FABRIC	SCT-1060
S593008306	300.00	330.00	58.00	19.32	9.66	9.66	NBR/FABRIC	SCT-449
S593001101	300.00	333.00	50.00	16.66	8.33	8.33	NBR	SCT-1150
S593008310	300.00	340.00	55.00	18.32	9.16	9.16	NBR/FABRIC	SCT-738
S593048301	304.80	336.55	41.27	13.74	6.87	6.87	NBR/FABRIC	SCT-888
S59304L501	304.80	342.90	27.27	9.08	4.54	4.54	PU	PPA-2149
S593108302	310.00	350.00	61.50	20.50	10.25	10.25	NBR/FABRIC	SCT-834
S593148301	314.32	339.72	49.60	16.52	8.26	8.26	NBR/FABRIC	SCT-1085
S593158401	315.00	345.00	65.00	21.66	10.83	10.83	NBR/FABRIC	SCT-1164
S593158304	315.00	350.00	38.45	12.80	6.40	6.40	NBR/FABRIC	SCT-433
S593178301	317.50	336.53	34.92	11.64	5.82	5.82	NBR/FABRIC	SCT-942
S593188301	318.00	348.00	53.00	17.66	8.83	8.83	NBR/FABRIC	SCT-640
S593188304	318.00	353.00	60.00	20.00	10.00	10.00	NBR/FABRIC	SCT-736
S593188303	318.33	343.33	50.50	16.82	8.41	8.41	NBR/FABRIC	SCT-722
S593208402	320.00	340.00	30.00	10.00	5.00	5.00	NBR/FABRIC	SCT-1212
S593208401	320.00	345.00	50.00	16.66	8.33	8.33	NBR/FABRIC	SCT-625
S593208315	320.00	350.00	54.00	18.00	9.00	9.00	NBR/FABRIC	SCT-734
S593238301	323.41	348.41	50.50	16.82	8.41	8.41	NBR/FABRIC	SCT-723
S593308501	330.00	360.00	38.00	12.66	6.33	6.33	FKM/FABRIC	SCT-779
S593308312	330.00	360.00	45.00	15.00	7.50	7.50	NBR/FABRIC	SCT-159
S593308313	330.00	370.00	60.00	20.00	10.00	10.00	NBR/FABRIC	SCT-352

Vee pack height can be adjusted by increasing or reducing the numbers of centre rings (C). This calculation can be done by the height of 'C' shown in the table.
Bold sizes are readily available in stock.
Other materials are available on request.

S59

Single Acting Rod Vee Pack

MAX SPARE LIMITED
QUALITY. PRECISION. SPEED.

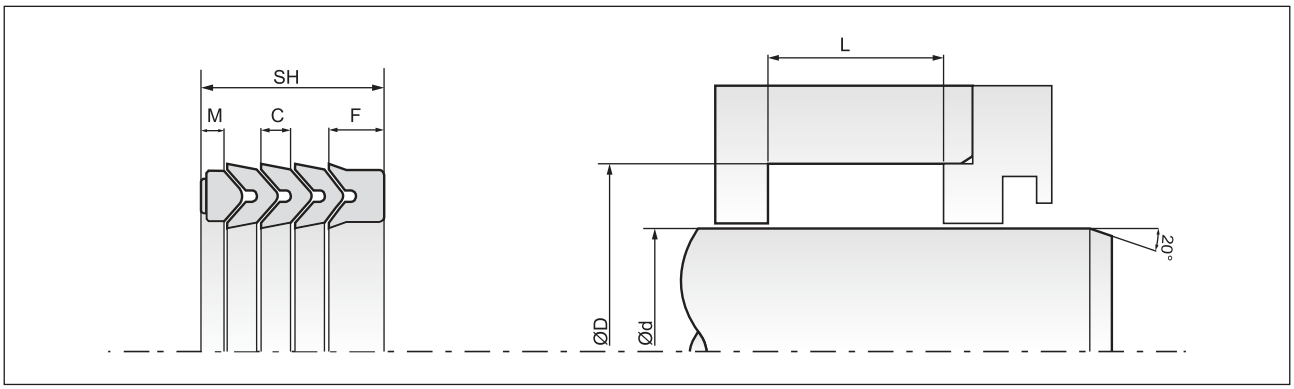

Part No.	d (h9)	D (H9)	SH (Stack Ht.)	F	C	M	Material	Mould No.
S593408301	340.00	380.00	60.00	20.00	10.00	10.00	NBR/FABRIC	SCT-407
S593428303	342.90	374.65	44.45	14.80	7.40	7.40	NBR/FABRIC	SCT-534
S593458301	345.00	375.00	50.00	16.66	8.33	8.33	NBR/FABRIC	SCT-744
S593498301	349.25	387.09	51.58	17.18	8.59	8.59	NBR/FABRIC	SCT-937
S593498301	349.25	387.09	51.58	17.18	8.59	8.59	NBR/FABRIC	SCT-937
S593508309	350.00	390.00	40.00	13.32	6.66	6.66	NBR/FABRIC	SCT-1054
S593508301	350.00	390.00	60.00	20.00	10.00	10.00	NBR/FABRIC	SCT-408
S593538301	353.00	392.00	85.00	28.32	14.16	14.16	NBR/FABRIC	SCT-725
S593558302	355.00	387.00	48.00	16.00	8.00	8.00	NBR/FABRIC	SCT-543
S593558303	355.00	390.00	54.00	18.00	9.00	9.00	NBR/FABRIC	SCT-798
S593608307	360.00	390.00	80.00	26.66	13.33	13.33	NBR/FABRIC	SCT-468
S593608310	360.00	392.00	44.00	14.66	7.33	7.33	NBR/FABRIC	SCT-803
S593608501	360.00	400.00	35.30	11.76	5.88	5.88	FKM/FABRIC	SCT-929
S593608401	360.00	400.00	60.00	20.00	10.00	10.00	NBR/FABRIC	SCT-1106
S593668301	366.00	400.00	50.50	16.82	8.41	8.41	NBR/FABRIC	SCT-539
S593688302	368.90	400.50	45.00	15.00	7.50	7.50	NBR/FABRIC	SCT-814
S593698501	369.00	400.00	45.00	15.00	7.50	7.50	FKM/FABRIC	SCT-379
S593708303	370.00	400.00	40.00	13.32	6.66	6.66	NBR/FABRIC	SCT-420
S593708306	370.00	420.00	80.00	26.66	13.33	13.33	NBR/FABRIC	SCT-1014
S593768601	376.00	430.00	60.00	20.00	10.00	10.00	FKM/FABRIC	SCT-1173
S593808305	380.00	410.00	42.50	14.16	7.08	7.08	NBR/FABRIC	SCT-1051
S593848301	384.00	420.00	51.00	17.00	8.50	8.50	NBR/FABRIC	SCT-838
S593858301	385.00	425.00	65.00	21.66	10.83	10.83	NBR/FABRIC	SCT-489
S594008311	400.00	430.00	52.50	17.50	8.75	8.75	NBR/FABRIC	SCT-747
S594008305	400.00	440.00	60.00	20.00	10.00	10.00	NBR/FABRIC	SCT-439
S594008314	400.00	445.00	60.00	20.00	10.00	10.00	NBR/FABRIC	SCT-1029
S59048301	404.00	434.00	56.70	18.90	9.45	9.45	NBR/FABRIC	SCT-1175
S594058301	405.00	450.00	60.00	20.00	10.00	10.00	NBR/FABRIC	SCT-730
S594068302	406.40	444.50	57.15	19.04	9.52	9.52	NBR/FABRIC	SCT-646
S594078302	407.00	458.00	65.00	21.66	10.83	10.83	NBR/FABRIC	SCT-549
S594078301	407.50	446.00	64.00	21.32	10.66	10.66	NBR/FABRIC	SCT-441
S594108501	410.00	450.00	60.00	20.00	10.00	10.00	FKM/FABRIC	SCT-494
S594108302	410.00	450.00	70.00	23.32	11.66	11.66	NBR/FABRIC	SCT-890
S594168302	416.00	450.00	58.67	19.54	9.77	9.77	NBR/FABRIC	SCT-131
S594208301	420.00	460.00	51.60	17.20	8.60	8.60	NBR/FABRIC	SCT-406
S594208401	420.00	460.00	66.00	22.00	11.00	11.00	NBR/FABRIC	SCT-1143
S594208306	420.00	461.00	48.00	16.00	8.00	8.00	NBR/FABRIC	SCT-1195
S594508303	450.00	490.00	40.00	13.32	6.66	6.66	NBR/FABRIC	SCT-717
S594508401	450.00	490.00	67.50	22.50	11.25	11.25	NBR/FABRIC	SCT-1094
S594528301	452.43	484.18	44.45	14.80	7.40	7.40	NBR/FABRIC	SCT-383
S594578402	457.20	488.95	38.10	12.70	6.35	6.35	NBR/FABRIC	SCT-1183
S594668301	466.20	522.80	75.00	25.00	12.50	12.50	NBR/FABRIC	SCT-894
S594708301	470.00	500.00	50.00	16.66	8.33	8.33	NBR/FABRIC	SCT-525
S594708302	470.00	520.00	76.00	25.32	12.66	12.66	NBR/FABRIC	SCT-735
S594758301	475.00	507.00	50.00	16.66	8.33	8.33	NBR/FABRIC	SCT-655
S594808402	480.00	545.00	75.00	25.00	12.50	12.50	NBR/FABRIC	SCT-1199
S594998301	499.65	545.00	80.00	26.66	13.33	13.33	NBR/FABRIC	SCT-859
S595008308	500.00	532.00	45.00	15.00	7.50	7.50	NBR/FABRIC	SCT-1018
S595008302	500.00	540.00	55.00	18.32	9.16	9.16	NBR/FABRIC	SCT-382
S595008307	500.00	540.00	65.00	21.66	10.83	10.83	NBR/FABRIC	SCT-966
S595008305	500.00	550.00	76.00	25.32	12.66	12.66	NBR/FABRIC	SCT-813
S595048301	504.00	544.00	60.00	20.00	10.00	10.00	NBR/FABRIC	SCT-1034

Vee pack height can be adjusted by increasing or reducing the numbers of centre rings (C). This calculation can be done by the height of 'C' shown in the table.

Bold sizes are readily available in stock.

Other materials are available on request.

S59

Single Acting Rod Vee Pack

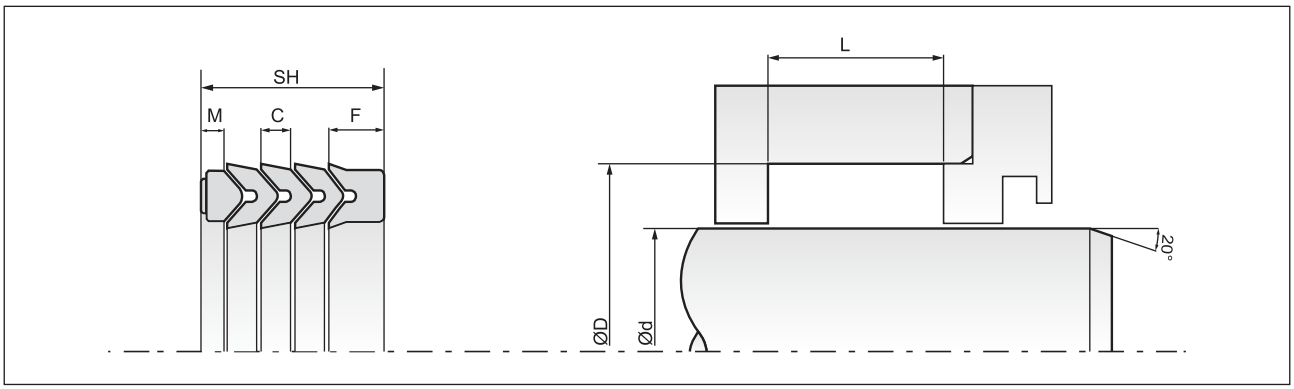

Part No.	d (h9)	D (H9)	SH (Stack Ht.)	F	C	M	Material	Mould No.
S595058301	505.00	545.00	60.00	20.00	10.00	10.00	NBR/FABRIC	SCT-783
S595108301	510.00	560.00	107.50	35.82	17.91	17.91	NBR/FABRIC	SCT-1016
S595208303	520.00	550.00	45.00	15.00	7.50	7.50	NBR/FABRIC	SCT-387
S595208304	520.00	570.00	75.00	25.00	12.50	12.50	NBR/FABRIC	SCT-1180
S595308401	530.00	580.00	70.00	23.32	11.66	11.66	NBR/FABRIC	SCT-1091
S595338401	533.40	571.50	50.80	16.92	8.46	8.46	NBR/FABRIC	SCT-1184
S595608303	560.00	600.00	55.00	18.32	9.16	9.16	NBR/FABRIC	SCT-1166
S595808303	580.00	630.00	80.00	26.66	13.33	13.33	NBR/FABRIC	SCT-297
S596008304	600.00	640.00	60.00	20.00	10.00	10.00	NBR/FABRIC	SCT-438
S596008501	600.00	640.00	66.00	22.00	11.00	11.00	FKM/FABRIC	SCT-397
S596048301	604.75	644.60	50.00	16.66	8.33	8.33	NBR/FABRIC	SCT-858
S596208301	620.00	660.00	44.00	14.66	7.33	7.33	NBR/FABRIC	SCT-1161
S596608501	660.00	700.00	67.00	22.32	11.16	11.16	FKM/FABRIC	SCT-962
S596708301	670.00	710.00	76.50	25.50	12.75	12.75	NBR/FABRIC	SCT-776
S596708401	670.00	720.00	70.00	23.32	11.66	11.66	NBR/FABRIC	SCT-671
S596708401	670.00	720.00	70.00	23.32	11.66	11.66	NBR/FABRIC	SCT-1093
S596858301	685.00	730.00	52.50	17.50	8.75	8.75	NBR/FABRIC	SCT-990
S597058301	705.00	735.00	45.00	15.00	7.50	7.50	NBR/FABRIC	SCT-591
S597158301	715.00	757.00	60.00	20.00	10.00	10.00	NBR/FABRIC	SCT-185
S597207301	720.00	760.00	63.00	21.00	10.50	10.50	FKM/FABRIC	SCT-904
S5973008301	730.00	770.00	70.00	23.32	11.66	11.66	NBR/FABRIC	SCT-713
S597508501	750.00	790.00	60.00	20.00	10.00	10.00	NBR/FABRIC	SCT-396
S597808301	780.00	830.00	112/114	24.65	23.40	27.76	NBR/FABRIC	SCT-532
S597818301	781.50	829.00	75.00	25.00	12.50	12.50	NBR/FABRIC	SCT-845
S598008301	800.00	850.00	75.00	25.00	12.50	12.50	NBR/FABRIC	SCT-763
S598008401	800.00	854.00	80.00	26.66	13.33	13.33	NBR/FABRIC	SCT-1140
S598608401	860.00	920.00	70.00	23.32	11.66	11.66	NBR/FABRIC	SCT-1090
S59900K201	900.00	950.00	75.00	25.00	12.50	12.50	NBR	SCT-431
S599008401	900.00	960.00	75.00	25.00	12.50	12.50	NBR/FABRIC	SCT-1170
S599308301	930.00	980.00	90.00	30.00	15.00	15.00	NBR/FABRIC	SCT-1168
S599658301	965.20	1016.00	93.75	31.24	15.62	15.62	NBR/FABRIC	SCT-891
S59999M101	1219.20	1295.40	107.95	38.10	19.05	12.70	HNBR/FABRIC	SLO-537

Vee pack height can be adjusted by increasing or reducing the numbers of centre rings (C). This calculation can be done by the height of 'C' shown in the table.
Bold sizes are readily available in stock.
Other materials are available on request.

S60

Single Acting Rod Vee Pack

DETAILS

S60 is a single-acting robust seal. Though it is suitable for a split piston, it is extremely suitable for medium-duty to heavy-duty application. The S60 seal accepts low & high pressure, vigorous conditions & also any misalignment between sealing gaps. The seal is a combination of a bottom seal, center ring & pressure ring. The center ring is the main seal being flexible enough to retain high & low pressures. The bottom seal supports the center ring from getting extruded against high pressures. The top ring helps in retaining the center ring profile & distributing pressure equally. In many cases, the S60 seals can also be split to enable ease of fitment.

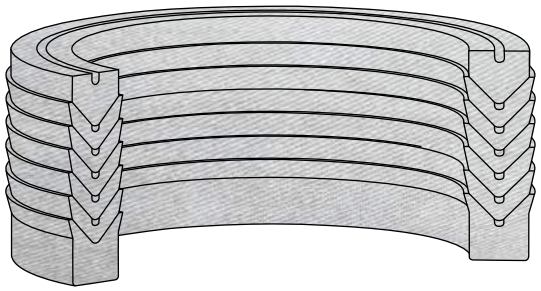

COMPATIBILITY

Mineral oils, bio oils, water soluble & water glycol fluids

MATERIAL

Nitrile Rubber with Fabric reinforcement 75/80 Shore 'A'

APPLICATION

Medium to heavy duty single acting cylinder with split piston.

OPERATING CONDITIONS

Temperature Range	:	-20°C to + 100°C
Pressure	:	400 Bar
Speed	:	0.5 m/s

FEATURES

- Long life.
- Accepts misalignment and uneven surfaces.
- Any size endless up to 1500 mm diameter available.

SURFACE ROUGHNESS

Static	:	1.6 µmRa
Dynamic	:	0.4 µmRa

S60

Single Acting Rod Vee Pack

MAX SPARE LIMITED
QUALITY. PRECISION. SPEED.

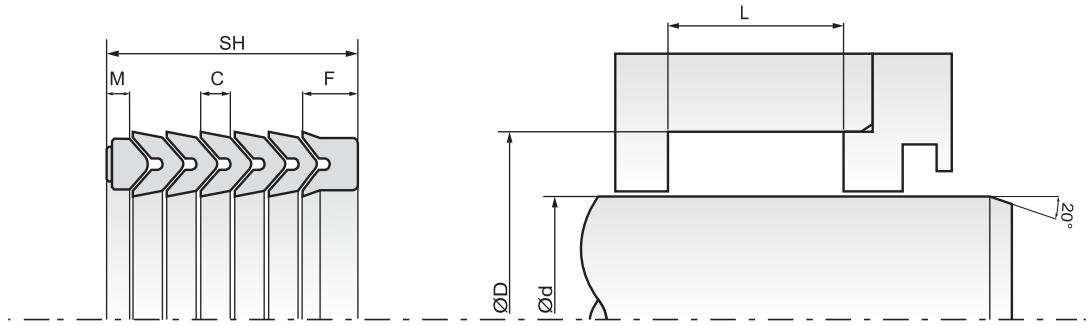

Part No.	d (h9)	D (H9)	SH (Stack Ht.)	F	C	M	Material	Mould No.
S60004M401	4.76	19.05	26.92	6.72	3.36	3.36	FSL	SAT-1194
S600048301	4.76	19.05	26.92	10.76	5.38	5.38	NBR/FABRIC	SAT-2395
S600048503	4.76	19.05	26.92	6.72	3.36	3.36	FKM/FABRIC	SAT-4064
S600048302	4.76	19.05	27.68	6.92	3.46	3.46	FKM/FABRIC	SAT-2448
S60004Z401	4.76	19.05	27.74	6.92	3.46	3.46	FSL	SAT-3314
S600068501	6.35	22.22	26.92	6.72	3.36	3.36	FKM/FABRIC	SAT-2357
S600068501	6.35	22.22	26.92	6.72	3.36	3.36	FKM/FABRIC	SAT-1056
S600068505	6.35	22.22	26.98	6.74	3.37	3.37	FKM/FABRIC	SAT-2508
S600066903	6.35	22.22	26.98	6.74	3.37	3.37	FKM	SAT-4060
S600066904	6.35	22.22	26.98	6.74	3.37	3.37	AFC	SAT-4351
S600068504	6.35	22.22	27.68	6.92	3.46	3.46	FKM/FABRIC	SAT-3945
S600068308	6.35	22.22	27.68	6.92	3.46	3.46	NBR	SAT-3694
S600061102	6.35	22.22	27.68	6.92	3.46	3.46	NBR/FABRIC	SAT-2543
S600061101	6.35	22.22	27.68	6.92	3.46	3.46	NBR/FABRIC	SAT-2449
S600068306	6.35	22.22	27.94	6.98	3.49	3.49	NBR/FABRIC	SAT-1965
S600068305	6.35	22.22	27.94	6.98	3.49	3.49	NBR/FABRIC	SAT-1783
S600068502	6.35	22.22	27.94	6.98	3.49	3.49	FKM/FABRIC	SAT-1784
S600067302	6.35	22.22	28.24	7.06	3.53	3.53	FSL	SAT-3349
S600068304	6.35	22.22	28.45	7.10	3.55	3.55	NBR/FABRIC	SAT-1477
S600068307	6.35	22.22	28.57	7.14	3.57	3.57	NBR/FABRIC	SAT-2396
S60006M401	6.35	22.22	30.94	7.72	3.86	3.86	FSL	SAT-701
S600098306	9.52	19.05	19.04	4.76	2.38	2.38	NBR/FABRIC	SAT-1627
S600098504	9.52	22.22	26.16	6.54	3.27	3.27	NBR/FABRIC	SAT-2450
S600098310	9.52	22.22	26.16	6.54	3.27	3.27	NBR	SAT-3693
S600097303	9.52	22.22	26.97	6.74	3.37	3.37	CAT	SAT-1778
S600098505	9.52	22.22	26.98	6.74	3.37	3.37	FKM/FABRIC	SAT-2509
S600096905	9.52	22.22	26.98	6.74	3.37	3.37	FKM	SAT-4061
S600096906	9.52	22.22	26.98	6.74	3.37	3.37	AFC	SAT-4352
S600098305	9.52	22.22	27.00	6.74	3.37	3.37	NBR/FABRIC	SAT-1304
S600098502	9.52	22.22	27.00	6.74	3.37	3.37	FKM/FABRIC	SAT-1055
S600091102	9.52	22.22	27.68	6.92	3.46	3.46	NBR/FABRIC	SAT-2542
S600098503	9.52	22.22	27.94	6.98	3.49	3.49	FKM/FABRIC	SAT-3063
S600098307	9.52	22.22	27.94	6.98	3.49	3.49	NBR/FABRIC	SAT-1785
S600098503	9.52	22.22	27.94	6.98	3.49	3.49	FKM/FABRIC	SAT-1786
S600098503	9.52	22.22	27.94	6.98	3.49	3.49	FKM/FABRIC	SAT-2458
S600098308	9.52	22.22	27.94	6.98	3.49	3.49	NBR/FABRIC	SAT-1964
S600097304	9.52	22.22	28.24	7.06	3.53	3.53	FSL	SAT-3351
S600098309	9.52	22.22	28.57	7.14	3.57	3.57	NBR/FABRIC	SAT-2397
S60009M401	9.52	22.22	30.48	7.62	3.81	3.81	FSL	SAT-771
S600094801	9.52	25.40	27.00	6.74	3.37	3.37	HNBR/FABRIC	SAT-4264
S600108601	10.00	20.00	18.50	4.62	2.31	2.31	FKM/FABRIC	SAT-4175
S600108302	10.00	20.00	30.00	7.50	3.75	3.75	NBR/FABRIC	SAT-158
S600128310	12.00	20.00	18.00	4.50	2.25	2.25	NBR/FABRIC	SAT-1242
S600128318	12.00	20.00	40.00	10.00	5.00	5.00	NBR/FABRIC	SAT-3776
S600128319	12.00	22.00	32.00	8.00	4.00	4.00	NBR/FABRIC	SAT-4362
S600128311	12.00	25.00	26.00	6.50	3.25	3.25	NBR/FABRIC	SAT-1628
S600128315	12.70	22.22	19.05	4.76	2.38	2.38	NBR/FABRIC	SAT-405
S600128316	12.70	25.40	25.40	6.34	3.17	3.17	NBR/FABRIC	SAT-3190
S600128504	12.70	25.40	26.16	6.54	3.27	3.27	FKM/FABRIC	SAT-2451
S600128503	12.70	25.40	26.92	6.72	3.36	3.36	NBR/FABRIC	SAT-2399
S600127301	12.70	25.40	26.97	6.74	3.37	3.37	CAT	SAT-1779
S600128302	12.70	25.40	26.97	6.74	3.37	3.37	NBR/FABRIC	SAT-3158

Vee pack height can be adjusted by increasing or reducing the numbers of centre rings (C). This calculation can be done by the height of 'C' shown in the table.

Bold sizes are readily available in stock.

Other materials are available on request.

S60

Single Acting Rod Vee Pack

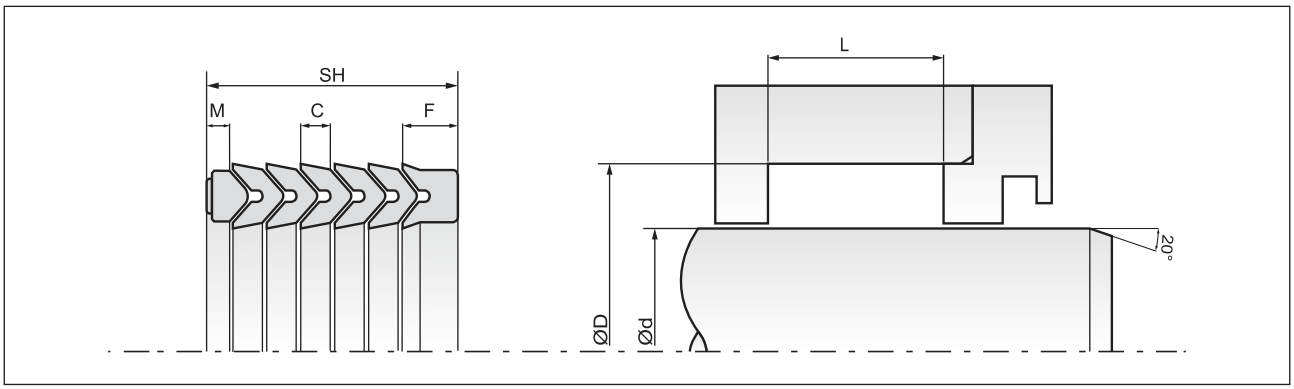

Part No.	d (h9)	D (H9)	SH (Stack Ht.)	F	C	M	Material	Mould No.
S600128505	12.70	25.40	26.98	6.74	3.37	3.37	FKM/FABRIC	SAT-2507
S600121102	12.70	25.40	27.68	6.92	3.46	3.46	NBR/FABRIC	SAT-2541
S600128502	12.70	25.40	27.94	6.98	3.49	3.49	FKM/FABRIC	SAT-1787
S600128312	12.70	25.40	27.94	6.98	3.49	3.49	NBR/FABRIC	SAT-1788
S600127302	12.70	25.40	28.24	7.06	3.53	3.53	FSL	SAT-3350
S600128313	12.70	25.40	28.57	7.14	3.57	3.57	NBR/FABRIC	SAT-2398
S600121104	12.70	25.40	29.71	7.42	3.71	3.71	NBR/FABRIC	SAT-3717
S60012A601	12.70	25.40	32.89	8.22	4.11	4.11	NBR/FABRIC	SAT-4134
S600128317	12.70	25.40	38.35	9.59	4.79	4.79	NBR/FABRIC	SAT-3579
S600128501	12.70	28.60	30.20	7.54	3.77	3.77	NBR/FABRIC	SAT-442
S600148306	14.00	22.00	40.00	10.00	5.00	5.00	NBR/FABRIC	SAT-3742
S60148301	14.00	24.00	18.50	4.62	2.31	2.31	NBR	SAT-3244
S600148304	14.00	24.00	20.00	5.00	2.50	2.50	NBR/FABRIC	SAT-1624
S600148305	14.00	27.00	28.00	7.00	3.50	3.50	NBR/FABRIC	SAT-3153
S600148303	14.28	23.81	19.05	4.76	2.38	2.38	NBR/FABRIC	SAT-1300
S600158308	15.00	25.00	30.00	7.50	3.75	3.75	NBR/FABRIC	SAT-3271
S600151101	15.75	28.45	30.54	7.62	3.81	3.81	NBR/FABRIC	SAT-3716
S600158305	15.87	25.40	19.04	4.76	2.38	2.38	NBR/FABRIC	SAT-1629
S600158304	15.87	25.40	19.05	4.76	2.38	2.38	NBR/FABRIC	SAT-1219
S600158307	15.87	28.57	25.40	6.34	3.17	3.17	NBR/FABRIC	SAT-2833
S600158306	15.87	31.75	34.92	8.73	4.37	4.37	NBR/FABRIC	SAT-1841
S600168308	16.00	25.00	30.00	7.50	3.75	3.75	NBR/FABRIC	SAT-2874
S600168306	16.00	26.00	20.00	5.00	2.50	2.50	NBR/FABRIC	SAT-1630
S600168307	16.00	27.00	14.00	3.50	1.75	1.75	NBR/FABRIC	SAT-2015
S600168309	16.00	28.00	20.00	5.00	2.50	2.50	NBR/FABRIC	SAT-3328
S60168301	16.00	28.00	24.50	6.12	3.06	3.06	NBR/FABRIC	SAT-2672
S600168305	16.00	28.50	35.00	8.75	4.38	4.38	NBR/FABRIC	SAT-955
S600168301	16.00	29.00	19.08	4.76	2.38	2.38	NBR/FABRIC	SAT-2600
S600188303	**18.00**	**28.00**	**26.50**	**6.62**	**3.31**	**3.31**	**NBR/FABRIC**	**SAT-132**
S600189001	18.00	30.00	27.50	6.86	3.43	3.43	NBR/FABRIC	SAT-4363
S600198314	19.05	28.57	19.05	4.76	2.38	2.38	NBR/FABRIC	SAT-3001
S600198320	19.05	28.57	38.35	9.59	4.79	4.79	NBR/FABRIC	SAT-4113
S600198305	19.05	31.75	25.57	6.38	3.19	3.19	NBR/FABRIC	SAT-2114
S600198501	19.05	31.75	26.16	6.54	3.27	3.27	FKM/FABRIC	SAT-3202
S600190601	19.05	31.75	27.00	6.74	3.37	3.37	NBR/FABRIC	SAT-703
S600196701	19.05	31.75	27.20	6.80	3.40	3.40	FKM/FABRIC	SAT-1290
S600198309	19.05	31.75	27.68	6.92	3.46	3.46	NBR/FABRIC	SAT-2545
S600191102	19.05	31.75	27.68	6.92	3.46	3.46	NBR/FABRIC	SAT-3470
S60019Z401	19.05	31.75	27.74	6.92	3.46	3.46	FSL	SAT-3311
S600198306	19.05	31.75	27.94	6.98	3.49	3.49	NBR/FABRIC	SAT-1632
S600198317	19.05	31.75	28.95	7.22	3.61	3.61	NBR/FABRIC	SAT-3248
S600198319	19.05	31.75	38.35	9.59	4.79	4.79	NBR/FABRIC	SAT-3594
S600198311	19.05	34.92	31.75	7.92	3.96	3.96	NBR/FABRIC	SAT-2834
S600198307	19.05	35.72	33.30	8.32	4.16	4.16	NBR/FABRIC	SAT-2061
S600198312	19.05	38.10	28.56	7.14	3.57	3.57	NBR/FABRIC	SAT-468
S600198313	19.20	29.80	19.00	4.74	2.37	2.37	NBR/FABRIC	SAT-2932
S600208312	20.00	30.00	17.50	4.36	2.18	2.18	NBR	SAT-935
S600208315	20.00	30.00	20.00	5.00	2.50	2.50	NBR/FABRIC	SAT-1631
S600208321.	20.00	31.00	32.00	8.00	4.00	4.00	NBR/FABRIC	SAT-3745
S600208306	**20.00**	**32.00**	**22.50**	**5.62**	**2.81**	**2.81**	**NBR/FABRIC**	**SAT-278**
S600208306	20.00	32.00	22.50	5.62	2.81	2.81	NBR/FABRIC	SAT-3178
S600208502	20.00	32.00	22.50	5.62	2.81	2.81	FKM/FABRIC	SAT-1218

Vee pack height can be adjusted by increasing or reducing the numbers of centre rings (C). This calculation can be done by the height of 'C' shown in the table.
Bold sizes are readily available in stock.

Other materials are available on request.

S60

Single Acting Rod Vee Pack

MAX SPARE LIMITED
QUALITY. PRECISION. SPEED.

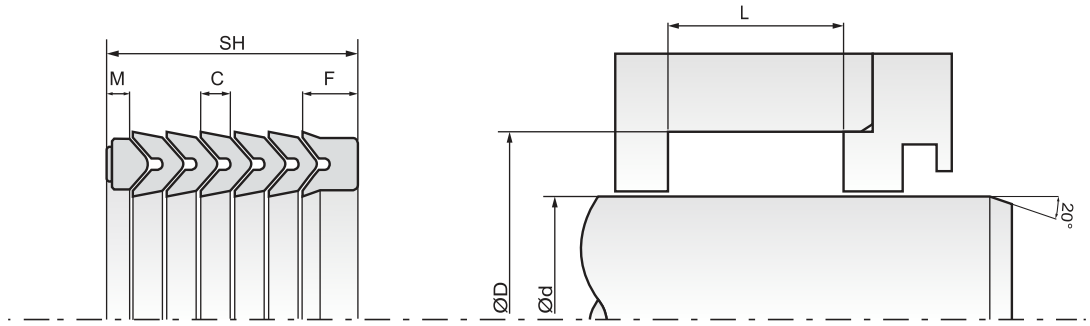

Part No.	d (h9)	D (H9)	SH (Stack Ht.)	F	C	M	Material	Mould No.
S600208316	20.00	32.00	24.00	6.00	3.00	3.00	NBR/FABRIC	SAT-1633
S600208321	20.00	32.00	25.00	6.24	3.12	3.12	NBR/FABRIC	SAT-2667
S600208401	20.00	35.00	25.00	6.24	3.12	3.12	NBR/FABRIC	SAT-4233
S600208317	20.00	35.00	30.00	7.50	3.75	3.75	NBR/FABRIC	SAT-1634
S600208320	20.00	35.00	30.00	7.50	3.75	3.75	NBR/FABRIC	SAT-2358
S600208318	20.00	39.00	37.50	9.38	4.69	4.69	NBR/FABRIC	SAT-2007
S600208322	20.62	33.32	25.40	6.34	3.17	3.17	NBR/FABRIC	SAT-2835
S600228313	22.00	32.00	17.50	4.36	2.18	2.18	NBR/FABRIC	SAT-977
S600228326	22.00	32.00	18.50	4.62	2.31	2.31	NBR/FABRIC	SAT-899
S600228330	22.00	32.00	23.50	5.86	2.93	2.93	NBR/FABRIC	SAT-3455
S600228502	22.00	34.00	22.50	5.62	2.81	2.81	FKM/FABRIC	SAT-1805
S600228328	22.00	34.00	22.50	5.62	2.81	2.81	NBR/FABRIC	SAT-1217
S600228318	22.00	35.00	20.00	5.00	2.50	2.50	NBR/FABRIC	SAT-1502
S600228318	22.00	35.00	20.00	5.00	2.50	2.50	NBR/FABRIC	SAT-1540
S600228301	**22.00**	**38.00**	**34.66**	**8.67**	**4.33**	**4.33**	**NBR/FABRIC**	**SAT-224**
S600228301	22.00	38.00	34.66	8.67	4.33	4.33	NBR/FABRIC	SAT-3179
S600228310	22.00	38.00	37.00	9.25	4.63	4.63	NBR/FABRIC	SAT-3241
S600228319	22.00	42.00	28.00	7.00	3.50	3.50	NBR/FABRIC	SAT-1504
S600228322	22.00	42.00	38.00	9.50	4.75	4.75	NBR/FABRIC	SAT-1511
S600228322	22.00	42.00	38.00	9.50	4.75	4.75	NBR/FABRIC	SAT-1542
S600228314	22.22	31.75	14.99	3.74	1.87	1.87	NBR/FABRIC	SAT-1222
S600222101	22.22	34.92	25.40	6.34	3.17	3.17	CR/FABRIC	SAT-1708
S600228327	22.22	34.92	25.40	6.34	3.17	3.17	NBR/FABRIC	SAT-3003
S600221102	22.22	34.92	27.58	6.88	3.44	3.44	NBR/FABRIC	SAT-3718
S600228302	22.22	34.92	29.30	7.32	3.66	3.66	NBR/FABRIC	SAT-2202
S600228331	22.22	34.92	38.35	9.59	4.79	4.79	NBR/FABRIC	SAT-3581
S600228325	22.22	38.10	31.75	7.92	3.96	3.96	NBR/FABRIC	SAT-2838
S600221101	22.22	38.10	41.27	10.32	5.16	5.16	NBR/FABRIC	SAT-1916
S600249001	24.00	40.00	48.00	12.00	6.00	6.00	NBR/FABRIC	SAT-4391
S600241001	24.77	42.04	31.75	7.92	3.96	3.96	NBR/FABRIC	SAT-3124
S600258355	25.00	33.00	22.50	5.62	2.81	2.81	NBR/FABRIC	SAT-4368
S600258353	25.00	33.50	18.00	4.50	2.25	2.25	NBR/FABRIC	SAT-3773
S600258335	25.00	35.00	23.06	5.76	2.88	2.88	NBR/FABRIC	SAT-1854
S600251203	25.00	37.00	21.50	5.36	2.68	2.68	NBR/FABRIC	SAT-1575
S600258322	25.00	37.00	22.50	5.62	2.81	2.81	NBR/FABRIC	SAT-1855
S600258402	25.00	37.00	23.00	5.74	2.87	2.87	NBR/FABRIC	SAT-4069
S600258324	25.00	40.00	22.50	5.62	2.81	2.81	NBR/FABRIC	SAT-1216
S600258332	25.00	40.00	26.25	6.56	3.28	3.28	NBR/FABRIC	SAT-1637
S600258303	25.00	40.00	31.10	7.76	3.88	3.88	NBR/FABRIC	SAT-2387
S600258306	**25.00**	**40.00**	**34.00**	**8.50**	**4.25**	**4.25**	**NBR/FABRIC**	**SAT-145**
S600258306	25.00	40.00	34.00	8.50	4.25	4.25	NBR/FABRIC	SAT-2629
S60025D601	25.00	41.00	34.60	8.65	4.33	4.33	HNBR/FABRIC	SAT-2423
S600258347	25.00	42.00	33.86	8.47	4.23	4.23	NBR/FABRIC	SAT-213
S600258341	25.00	45.00	60.00	15.00	7.50	7.50	NBR/FABRIC	SAT-2409
S600258319	25.40	34.92	19.05	4.76	2.38	2.38	NBR/FABRIC	SAT-810
S600258352	25.40	34.92	38.35	9.59	4.79	4.79	NBR/FABRIC	SAT-3580
S600258325	25.40	34.93	17.15	4.28	2.14	2.14	NBR/FABRIC	SAT-1244
S600258307	25.40	38.10	25.40	6.34	3.17	3.17	FKM/FABRIC	SAT-3119
S600256908	25.40	38.10	25.40	6.34	3.17	3.17	NBR	SAT-4100
S600256907	25.40	38.10	25.40	6.34	3.17	3.17	FKM	SAT-4101
S600258333	25.40	38.10	25.42	6.34	3.17	3.17	NBR/FABRIC	SAT-1636
S600258344	25.40	38.10	27.68	6.92	3.46	3.46	NBR/FABRIC	SAT-2544

Vee pack height can be adjusted by increasing or reducing the numbers of centre rings (C). This calculation can be done by the height of 'C' shown in the table.

Bold sizes are readily available in stock.

Other materials are available on request.

S60

Single Acting Rod Vee Pack

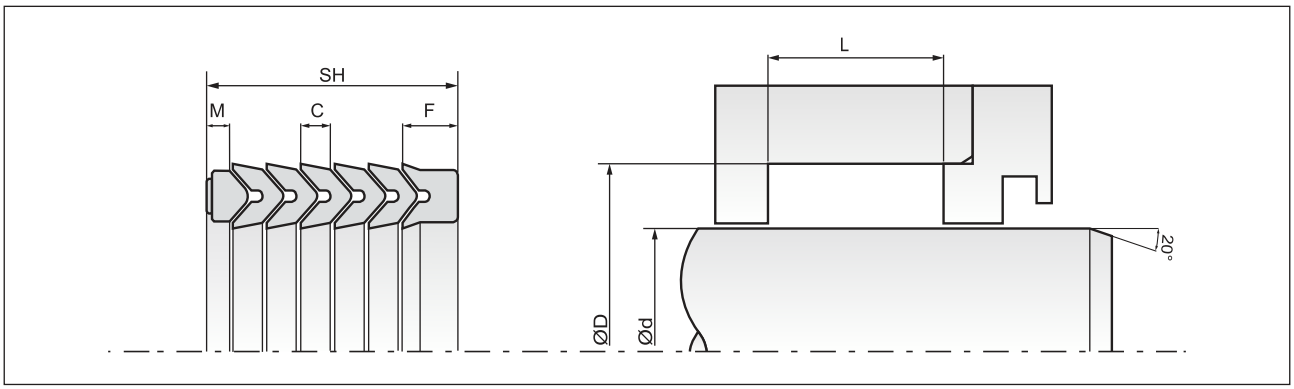

Part No.	d (h9)	D (H9)	SH (Stack Ht.)	F	C	M	Material	Mould No.
S600251104	25.40	38.10	27.68	6.92	3.46	3.46	NBR/FABRIC	SAT-2447
S60025Z401	25.40	38.10	27.74	6.92	3.46	3.46	FSL	SAT-3313
S600258403	25.40	38.10	29.97	7.48	3.74	3.74	NBR/FABRIC	SAT-4203
S600251103	25.40	38.10	41.27	10.32	5.16	5.16	NBR/FABRIC	SAT-1917
S600258334	25.40	41.27	31.70	7.92	3.96	3.96	NBR/FABRIC	SAT-1639
S600258337	25.40	41.27	31.75	7.92	3.96	3.96	NBR/FABRIC	SAT-2291
S600258337	25.40	41.27	31.75	7.92	3.96	3.96	NBR/FABRIC	SAT-1899
S600258317	25.40	41.27	33.70	8.43	4.21	4.21	NBR/FABRIC	SAT-1024
S600258329	25.40	41.27	34.67	8.67	4.33	4.33	NBR/FABRIC	SAT-1580
S600251105	25.40	41.27	34.67	8.67	4.33	4.33	NBR	SAT-3253
S600251102	25.40	41.27	35.28	8.82	4.41	4.41	NBR/FABRIC	SAT-915
S600258321	25.40	41.27	36.07	9.02	4.51	4.51	NBR/FABRIC	SAT-1302
S600258354	25.40	41.27	38.35	9.59	4.79	4.79	NBR/FABRIC	SAT-4245
S600258346	25.40	44.45	38.10	9.53	4.76	4.76	NBR/FABRIC	SAT-3815
S600258346	25.40	44.45	38.10	9.53	4.76	4.76	NBR/FABRIC	SAT-2842
S600278302	27.94	44.45	38.10	9.53	4.76	4.76	NBR/FABRIC	SAT-3822
S600288333	28.00	38.00	27.00	6.74	3.37	3.37	NBR/FABRIC	SAT-3960
S600288328	28.00	38.00	54.00	13.50	6.75	6.75	NBR/FABRIC	SAT-3255
S600288301	**28.00**	**40.00**	**18.50**	**4.62**	**2.31**	**2.31**	**NBR/FABRIC**	**SAT-212**
S600288312	28.00	40.00	21.50	5.36	2.68	2.68	NBR/FABRIC	SAT-968
S600288323	28.00	40.00	22.50	5.62	2.81	2.81	NBR/FABRIC	SAT-2958
S600288301	28.00	40.00	22.66	5.66	2.83	2.83	NBR/FABRIC	SAT-1258
S600288301	28.00	40.00	22.66	5.66	2.83	2.83	NBR/FABRIC	SAT-2628
S600288504	28.00	40.00	24.00	6.00	3.00	3.00	FKM/FABRIC	SAT-3082
S600288317	28.00	40.00	24.50	6.12	3.06	3.06	NBR/FABRIC	SAT-1638
S600288303	28.00	40.00	25.00	6.24	3.12	3.12	NBR/FABRIC	SAT-3500
S600288320	28.00	40.48	25.00	6.24	3.12	3.12	NBR/FABRIC	SAT-1985
S600288322	28.00	42.50	30.00	7.50	3.75	3.75	NBR/FABRIC	SAT-2482
S600288314	28.00	43.00	22.50	5.62	2.81	2.81	NBR/FABRIC	SAT-1215
S600288309	**28.00**	**43.00**	**30.00**	**7.50**	**3.75**	**3.75**	**NBR/FABRIC**	**SAT-256**
S600288325	28.00	44.00	50.00	12.50	6.25	6.25	NBR/FABRIC	SAT-3051
S600288321	28.44	41.14	35.00	8.75	4.38	4.38	NBR/FABRIC	SAT-2462
S600288324	28.57	38.10	19.05	4.76	2.38	2.38	NBR/FABRIC	SAT-3002
S600288319	28.57	41.27	25.40	6.34	3.17	3.17	NBR/FABRIC	SAT-1790
S60028S401	28.57	41.27	34.92	8.73	4.37	4.37	HNBR/FABRIC	SAT-3852
S600288332	28.57	41.27	38.35	9.59	4.79	4.79	NBR/FABRIC	SAT-3595
S600288318	28.57	44.45	31.70	7.92	3.96	3.96	NBR/FABRIC	SAT-1640
S600288401	28.57	53.97	52.38	13.10	6.55	6.55	NBR/FABRIC	SAT-4383
S600288313	28.57	57.15	42.46	10.62	5.31	5.31	NBR/FABRIC	SAT-1115
S600308309	30.00	40.00	21.80	5.44	2.72	2.72	NBR/FABRIC	SAT-1531
S600308316	30.00	42.00	21.50	5.36	2.68	2.68	NBR	SAT-934
S600308329	30.00	42.00	22.50	5.62	2.81	2.81	NBR/FABRIC	SAT-1804
S600308501	30.00	45.00	22.50	5.62	2.81	2.81	FKM/FABRIC	SAT-1803
S600308319	30.00	45.00	22.50	5.62	2.81	2.81	NBR/FABRIC	SAT-1214
S600308322	30.00	45.00	29.00	7.24	3.62	3.62	NBR/FABRIC	SAT-1338
S600308303	**30.00**	**45.00**	**29.60**	**7.40**	**3.70**	**3.70**	**NBR/FABRIC**	**SAT-218**
S600308304	**30.00**	**50.00**	**39.15**	**9.79**	**4.89**	**4.89**	**NBR/FABRIC**	**SAT-306**
S600301001	30.00	52.00	40.00	10.00	5.00	5.00	NBR	SAT-3393
S600318320	31.00	43.00	20.50	5.12	2.56	2.56	NBR/FABRIC	SAT-3332
S600318314	31.75	41.27	19.05	4.76	2.38	2.38	NBR/FABRIC	SAT-3004
S600318321	31.75	41.27	38.35	9.59	4.79	4.79	NBR/FABRIC	SAT-3582
S600318313	31.75	44.45	21.59	5.38	2.69	2.69	NBR/FABRIC	SAT-2546

Vee pack height can be adjusted by increasing or reducing the numbers of centre rings (C). This calculation can be done by the height of 'C' shown in the table.
Bold sizes are readily available in stock.
Other materials are available on request.

S60

Single Acting Rod Vee Pack

MAX SPARE LIMITED
QUALITY. PRECISION. SPEED.

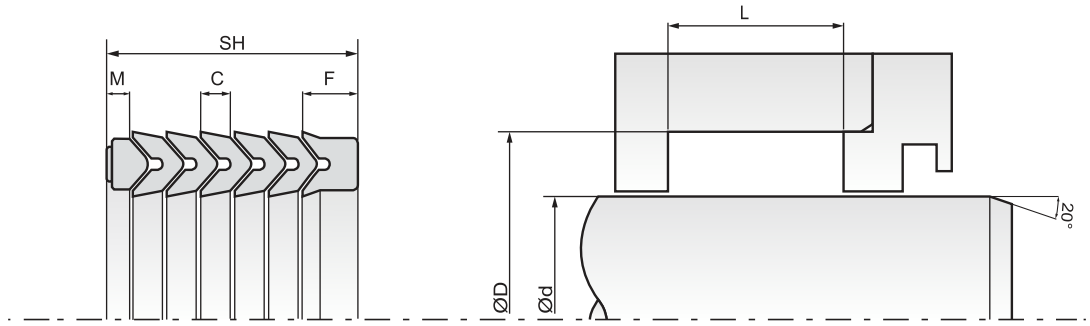

Part No.	d (h9)	D (H9)	SH (Stack Ht.)	F	C	M	Material	Mould No.
S600318313	31.75	44.45	21.59	5.38	2.69	2.69	NYLON	PPA-1515
S600318318	31.75	44.45	25.00	6.24	3.12	3.12	NBR/FABRIC	SAT-3042
S600318301	**31.75**	**44.45**	**25.39**	**6.34**	**3.17**	**3.17**	**NBR/FABRIC**	**SAT-378**
S600318311	31.75	44.45	25.40	6.34	3.17	3.17	NBR/FABRIC	SAT-1641
S600318502	31.75	44.45	25.40	6.34	3.17	3.17	FKM/FABRIC	SAT-2579
S600318501	31.75	44.45	27.68	6.92	3.46	3.46	FKM/FABRIC	SAT-2434
S60031M401	31.75	44.45	31.75	7.92	3.96	3.96	FSL	SAT-3281
S600318401	31.75	44.45	37.97	9.49	4.75	4.75	NBR/FABRIC	SAT-3962
S600318322	31.75	44.45	38.35	9.59	4.79	4.79	NBR/FABRIC	SAT-3583
S600318326	31.75	44.45	48.00	12.00	6.00	6.00	NBR/FABRIC	SAT-4382
S600318315	31.75	47.62	31.75	7.92	3.96	3.96	NBR/FABRIC	SAT-3000
S600318323	31.75	47.62	38.35	9.59	4.79	4.79	NBR/FABRIC	SAT-3584
S600318317	31.75	50.80	35.05	8.76	4.38	4.38	NBR/FABRIC	SAT-2996
S600318324	31.75	50.80	38.35	9.59	4.79	4.79	NBR/FABRIC	SAT-3585
S600318309	31.75	57.15	38.10	9.53	4.76	4.76	NBR/FABRIC	SAT-1116
S600318325	31.75	57.15	38.35	9.59	4.79	4.79	NBR/FABRIC	SAT-3593
S600318316	31.75	57.15	50.80	12.70	6.35	6.35	NBR/FABRIC	SAT-2997
S600328324	32.00	40.00	16.00	4.00	2.00	2.00	NBR/FABRIC	SAT-2764
S600328314	32.00	44.00	23.00	5.74	2.87	2.87	NBR/FABRIC	SAT-1371
S600328317	32.00	45.00	26.00	6.50	3.25	3.25	NBR/FABRIC	SAT-1642
S600328507	32.00	45.40	50.00	12.50	6.25	6.25	FKM/FABRIC	SAT-2607
S600328329	32.00	47.00	22.50	5.62	2.81	2.81	NBR/FABRIC	SAT-1213
S600321002	32.00	47.00	22.50	5.62	2.81	2.81	FKM/FABRIC	SAT-997
S600321101	32.00	47.00	22.80	5.70	2.85	2.85	NBR/FABRIC	SAT-2094
S600328311	32.00	47.00	25.00	6.24	3.12	3.12	NBR/FABRIC	SAT-1345
S600328318	32.00	48.00	23.43	5.84	2.92	2.92	NBR/FABRIC	SAT-2454
S600328321	32.00	50.00	30.00	7.50	3.75	3.75	NBR/FABRIC	SAT-2530
S600328323	32.00	52.00	50.00	12.50	6.25	6.25	NBR/FABRIC	SAT-2699
S600328504	32.00	55.00	50.00	12.50	6.25	6.25	FKM/FABRIC	SAT-1427
S600338301	33.00	48.00	35.00	8.75	4.38	4.38	NBR/FABRIC	SAT-3541
S600348320	34.00	53.00	23.50	5.86	2.93	2.93	NBR/FABRIC	SAT-3331
S600348303	34.00	53.00	35.00	8.75	4.38	4.38	NBR/FABRIC	SAT-1167
S600348302	**34.90**	**50.80**	**32.27**	**8.06**	**4.03**	**4.03**	**NBR/FABRIC**	**SAT-811**
S600348311	34.92	41.27	25.40	6.34	3.17	3.17	NBR/FABRIC	SAT-1471
S600348317	34.92	44.45	19.05	4.76	2.38	2.38	NBR/FABRIC	SAT-2998
S600348322	34.92	44.45	38.35	9.59	4.79	4.79	NBR/FABRIC	SAT-4246
S60034K101	34.92	47.62	23.95	5.98	2.99	2.99	NBR/FABRIC	SAT-4054
S600348312	34.92	47.62	25.40	6.34	3.17	3.17	NBR/FABRIC	SAT-1643
S600348301	34.92	47.62	27.52	6.88	3.44	3.44	NBR/FABRIC	SAT-1337
S600348321	34.92	47.62	38.35	9.59	4.79	4.79	NBR/FABRIC	SAT-3586
S600348310	34.92	50.80	31.75	7.92	3.96	3.96	NBR/FABRIC	SAT-1645
S600348318	34.92	53.97	38.10	9.53	4.76	4.76	NBR/FABRIC	SAT-2999
S600348319	34.92	57.15	44.45	11.11	5.56	5.56	NBR/FABRIC	SAT-3021
S600348315	34.93	47.63	25.00	6.24	3.12	3.12	NBR/FABRIC	SAT-2220
S600358332	35.00	45.00	22.80	5.70	2.85	2.85	NBR/FABRIC	SAT-2383
S600358304	35.00	45.00	24.00	6.00	3.00	3.00	NBR/FABRIC	SAT-2164
S600358318	35.00	47.00	21.50	5.36	2.68	2.68	NBR	SAT-933
S600358317	**35.00**	**47.00**	**22.80**	**5.70**	**2.85**	**2.85**	**NBR/FABRIC**	**SAT-556**
S600358337	35.00	47.00	22.80	5.70	2.85	2.85	NBR/FABRIC	SAT-2638
S600358324	35.00	47.00	24.00	6.00	3.00	3.00	NBR/FABRIC	SAT-1291
S600351003	35.00	47.00	25.00	6.24	3.12	3.12	NBR	SAT-3358
S600358335	35.00	48.00	33.00	8.24	4.12	4.12	NBR/FABRIC	SAT-3095

Vee pack height can be adjusted by increasing or reducing the numbers of centre rings (C). This calculation can be done by the height of 'C' shown in the table.

Bold sizes are readily available in stock.

Other materials are available on request.

S60

Single Acting Rod Vee Pack

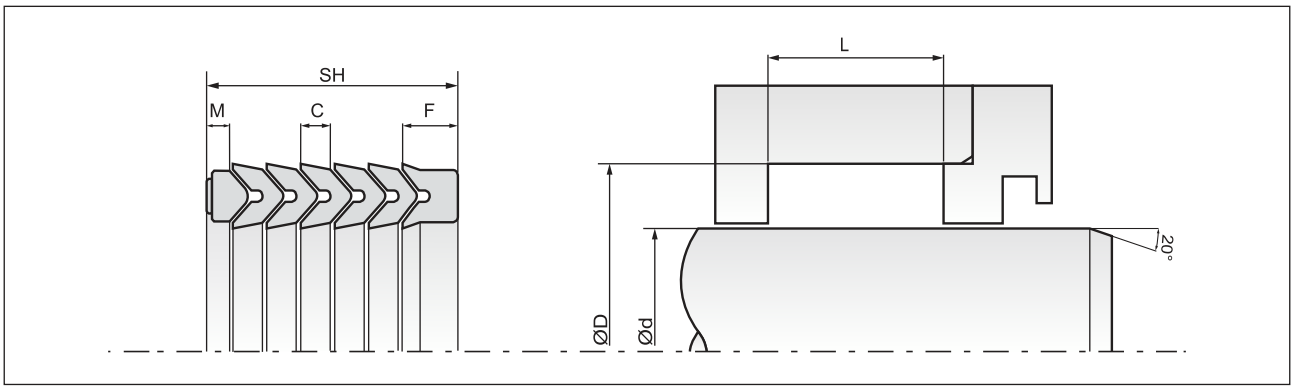

Part No.	d (h9)	D (H9)	SH (Stack Ht.)	F	C	M	Material	Mould No.
S600358334	35.00	48.80	30.00	7.50	3.75	3.75	NBR/FABRIC	SAT-2739
S600351202	35.00	50.00	21.50	5.36	2.68	2.68	NBR/FABRIC	SAT-1151
S600358328	35.00	50.00	26.25	6.56	3.28	3.28	NBR/FABRIC	SAT-1644
S600358330	35.00	50.00	27.00	6.74	3.37	3.37	NBR/FABRIC	SAT-1868
S600358302	35.00	50.00	30.00	7.50	3.75	3.75	NBR/FABRIC	SAT-1341
S600358303	35.00	50.00	33.00	8.24	4.12	4.12	NBR/FABRIC	SAT-2637
S600358303	**35.00**	**50.00**	**33.00**	**8.24**	**4.12**	**4.12**	**NBR/FABRIC**	**SAT-857**
S600358336	35.00	50.00	35.00	8.75	4.38	4.38	NBR/FABRIC	SAT-3112
S600351002	35.00	51.00	30.00	7.50	3.75	3.75	NBR	SAT-3236
S600351004	35.00	52.00	40.00	10.00	5.00	5.00	NBR	SAT-3394
S600358315	35.00	55.00	28.00	7.00	3.50	3.50	NBR/FABRIC	SAT-1528
S600359001	35.00	60.00	62.50	15.63	7.81	7.81	NBR/FABRIC	SAT-4337
S600358321	35.00	65.00	45.00	11.25	5.63	5.63	NBR/FABRIC	SAT-1114
S600368305	**36.00**	**48.00**	**22.50**	**5.62**	**2.81**	**2.81**	**NBR/FABRIC**	**SAT-270**
S600365902	36.00	48.00	22.50	5.62	2.81	2.81	PU	PPA-959
S600368322	36.00	48.00	22.50	5.62	2.81	2.81	NBR/FABRIC	SAT-1452
S600368321	36.00	50.00	22.50	5.62	2.81	2.81	NBR/FABRIC	SAT-3197
S600368303	**36.00**	**50.00**	**29.50**	**7.36**	**3.68**	**3.68**	**NBR/FABRIC**	**SAT-827**
S600368312	36.00	51.00	22.50	5.62	2.81	2.81	NBR/FABRIC	SAT-1211
S600368314	36.00	51.00	26.25	6.56	3.28	3.28	NBR/FABRIC	SAT-1625
S600368313	36.00	52.00	22.50	5.62	2.81	2.81	NBR/FABRIC	SAT-1210
S600378301	37.00	49.00	38.00	9.50	4.75	4.75	NBR/FABRIC	SAT-1968
S600378302	37.70	50.90	29.50	7.36	3.68	3.68	NBR/FABRIC	SAT-4035
S600388308	38.00	48.00	20.00	5.00	2.50	2.50	NBR/FABRIC	SAT-3613
S600388312	38.00	50.00	19.50	4.86	2.43	2.43	NBR/FABRIC	SAT-2060
S600388301	38.00	50.00	21.00	5.24	2.62	2.62	NBR/FABRIC	SAT-3169
S600388315	38.10	47.62	19.05	4.76	2.38	2.38	NBR/FABRIC	SAT-2836
S600388314	38.10	50.80	25.40	6.34	3.17	3.17	NBR/FABRIC	SAT-2321
S600388310	38.10	50.80	25.40	6.34	3.17	3.17	FKM/FABRIC	SAT-1646
S600388314	38.10	50.80	25.40	6.34	3.17	3.17	NBR/FABRIC	PPA-1356
S600388401	38.10	50.80	25.40	6.34	3.17	3.17	NBR/FABRIC	SAT-3963
S60038L501	38.10	50.80	25.93	6.48	3.24	3.24	PU	PPA-3381
S600388302	38.10	50.80	25.93	6.48	3.24	3.24	NBR/FABRIC	SAT-2635
S600388302	**38.10**	**50.80**	**25.93**	**6.48**	**3.24**	**3.24**	**NBR/FABRIC**	**SAT-250**
S600388323	38.10	50.80	38.35	9.59	4.79	4.79	NBR/FABRIC	SAT-3596
S600388316	38.10	53.97	31.75	7.92	3.96	3.96	NBR/FABRIC	SAT-1647
S600388321	38.10	53.97	33.50	8.38	4.19	4.19	NBR/FABRIC	SAT-3257
S600388324	38.10	53.97	38.35	9.59	4.79	4.79	NBR/FABRIC	SAT-3587
S600388317	38.10	57.15	38.10	9.53	4.76	4.76	NBR/FABRIC	SAT-3009
S600388318	38.10	60.32	44.45	11.11	5.56	5.56	NBR/FABRIC	SAT-3020
S600388309	38.10	63.50	33.38	8.35	4.17	4.17	NBR/FABRIC	SAT-1029
S600388319	38.10	63.50	50.80	12.70	6.35	6.35	NBR/FABRIC	SAT-3008
S600391201	39.00	52.00	21.50	5.36	2.68	2.68	NBR/FABRIC	SAT-1152
S600398310	39.00	56.00	35.00	8.75	4.38	4.38	NBR/FABRIC	SAT-3113
S600408331	40.00	50.00	21.00	5.24	2.62	2.62	NBR/FABRIC	SAT-2317
S600408308	**40.00**	**52.00**	**22.50**	**5.62**	**2.81**	**2.81**	**NBR/FABRIC**	**SAT-304**
S600408502	40.00	52.00	22.50	5.62	2.81	2.81	FKM/FABRIC	SAT-1802
S600408321	40.00	52.00	27.00	6.74	3.37	3.37	NBR/FABRIC	SAT-1264
S600408323	40.00	52.00	30.00	7.50	3.75	3.75	NBR/FABRIC	SAT-1649
S600408503	40.00	55.00	22.50	5.62	2.81	2.81	FKM/FABRIC	SAT-1801
S600408320	40.00	55.00	22.50	5.62	2.81	2.81	NBR/FABRIC	SAT-1209
S600408333	40.00	55.00	29.00	7.24	3.62	3.62	NBR/FABRIC	SAT-2524

Vee pack height can be adjusted by increasing or reducing the numbers of centre rings (C). This calculation can be done by the height of 'C' shown in the table.
Bold sizes are readily available in stock.

Other materials are available on request.

S60

Single Acting Rod Vee Pack

MAX SPARE LIMITED
QUALITY. PRECISION. SPEED.

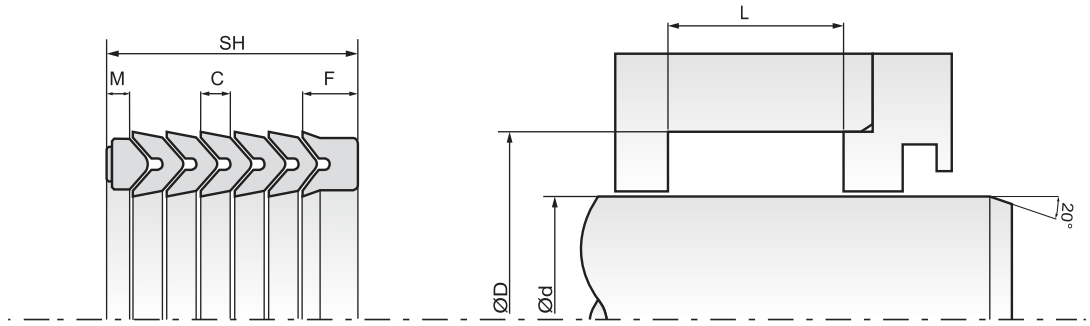

Part No.	d (h9)	D (H9)	SH (Stack Ht.)	F	C	M	Material	Mould No.
S600408302	40.00	55.00	30.16	7.54	3.77	3.77	NBR/FABRIC	SAT-1530
S600408302	**40.00**	**55.00**	**30.16**	**7.54**	**3.77**	**3.77**	**NBR/FABRIC**	**SAT-167**
S600408313	40.00	55.00	34.91	8.73	4.36	4.36	NBR/FABRIC	SAT-1533
S600408334	40.00	55.00	35.00	8.75	4.38	4.38	NBR/FABRIC	SAT-2571
S600408304	**40.00**	**56.00**	**23.43**	**5.84**	**2.92**	**2.92**	**NBR/FABRIC**	**SAT-210**
S600408324	40.00	56.00	27.43	6.84	3.42	3.42	NBR/FABRIC	SAT-1650
S600408322	40.00	60.00	25.00	6.24	3.12	3.12	NBR/FABRIC	SAT-1416
S600408325	40.00	60.00	30.00	7.50	3.75	3.75	NBR/FABRIC	SAT-1652
S600406601	40.00	60.00	30.00	7.50	3.75	3.75	FKM	SAT-2436
S600408305	**40.00**	**60.00**	**40.00**	**10.00**	**5.00**	**5.00**	**NBR/FABRIC**	**SAT-156**
S600418301	41.00	58.00	70.00	17.50	8.75	8.75	NBR/FABRIC	SAT-2329
S600418303	41.27	53.97	25.40	6.34	3.17	3.17	NBR/FABRIC	SAT-3016
S600418306	41.27	53.97	38.35	9.59	4.79	4.79	NBR/FABRIC	SAT-4244
S600418302	41.27	57.15	31.75	7.92	3.96	3.96	NBR/FABRIC	SAT-2837
S600418304	41.27	60.32	38.10	9.53	4.76	4.76	NBR/FABRIC	SAT-3010
S600428311	42.00	53.00	24.00	6.00	3.00	3.00	NBR/FABRIC	SAT-3306
S600428308	42.00	54.00	20.30	5.06	2.53	2.53	NBR/FABRIC	SAT-2372
S600428310	42.00	54.00	23.00	5.74	2.87	2.87	NBR/BFT	SAT-518
S600428309	42.00	54.00	27.00	6.74	3.37	3.37	NBR/FABRIC	SAT-115
S600428306	42.00	57.00	22.50	5.62	2.81	2.81	NBR/FABRIC	SAT-1208
S600428307	42.00	62.00	20.00	5.00	2.50	2.50	NBR/FABRIC	SAT-1505
S60042M101	42.00	62.00	40.00	10.00	5.00	5.00	HNBR/FABRIC	SAT-1081
S600438301	43.00	58.00	35.00	8.75	4.38	4.38	NBR/FABRIC	SAT-3539
S600448322	44.45	53.97	19.05	4.76	2.38	2.38	NBR/FABRIC	SAT-3005
S60044K101	44.45	57.15	24.00	6.00	3.00	3.00	NYLON	PPA-1208
S600448301	44.45	57.15	24.89	6.22	3.11	3.11	NBR/FABRIC	SAT-2368
S600448315	44.45	57.15	25.40	6.34	3.17	3.17	NBR/FABRIC	SAT-1651
S60044E302	44.45	60.32	27.00	6.74	3.37	3.37	NBR/FABRIC	SAT-4336
S600448320	44.45	60.32	31.75	7.92	3.96	3.96	NBR/FABRIC	SAT-476
S600448325	44.45	60.32	38.35	9.59	4.79	4.79	NBR/FABRIC	SAT-3588
S600448312	44.45	63.50	31.35	7.82	3.91	3.91	NBR/FABRIC	SAT-1028
S600448312	44.45	63.50	31.35	7.82	3.91	3.91	NBR/FABRIC	SAT-1342
S600448316	44.45	63.50	38.09	9.52	4.76	4.76	NBR/FABRIC	SAT-1656
S600448326	44.45	63.50	38.35	9.59	4.79	4.79	NBR/FABRIC	SAT-3589
S600441001	44.45	64.29	29.00	7.24	3.62	3.62	NBR	SAT-1334
S600448323	44.45	69.85	38.10	9.53	4.76	4.76	NBR/FABRIC	SAT-3012
S600458325	45.00	55.00	22.50	5.62	2.81	2.81	NBR/FABRIC	SAT-2511
S600458512	45.00	55.00	23.32	5.82	2.91	2.91	FKM/FABRIC	SAT-2573
S600458336	45.00	56.00	23.00	5.74	2.87	2.87	NBR/FABRIC	SAT-2301
S600458324	45.00	57.00	30.00	7.50	3.75	3.75	NBR/FABRIC	SAT-903
S600458333	45.00	60.00	22.50	5.62	2.81	2.81	NBR/FABRIC	SAT-2078
S600458510	45.00	60.00	22.50	5.62	2.81	2.81	FKM/FABRIC	SAT-2314
S600458346	45.00	60.00	22.50	5.62	2.81	2.81	NBR/FABRIC	SAT-130
S600458332	45.00	60.00	22.50	5.62	2.81	2.81	NBR/FABRIC	SAT-1026
S600456603	45.00	60.00	22.50	5.62	2.81	2.81	FKM	SAT-4029
S600458343	45.00	60.00	24.00	6.00	3.00	3.00	NBR/FABRIC	SAT-1753
S600458314	45.00	60.00	29.62	7.40	3.70	3.70	NBR/FABRIC	SAT-1532
S600458302	45.00	60.00	29.70	7.42	3.71	3.71	NBR/FABRIC	SAT-2633
S600458302	**45.00**	**60.00**	**29.70**	**7.42**	**3.71**	**3.71**	**NBR/FABRIC**	**SAT-206**
S600451003	45.00	60.00	34.00	8.50	4.25	4.25	NBR	SAT-2514
S600458355	45.00	60.00	34.00	8.50	4.25	4.25	NBR/FABRIC	SAT-3736
S600450701	45.00	60.00	40.00	10.00	5.00	5.00	NBR/FABRIC	SAT-1653

Vee pack height can be adjusted by increasing or reducing the numbers of centre rings (C). This calculation can be done by the height of 'C' shown in the table.

Bold sizes are readily available in stock.

Other materials are available on request.

S60

Single Acting Rod Vee Pack

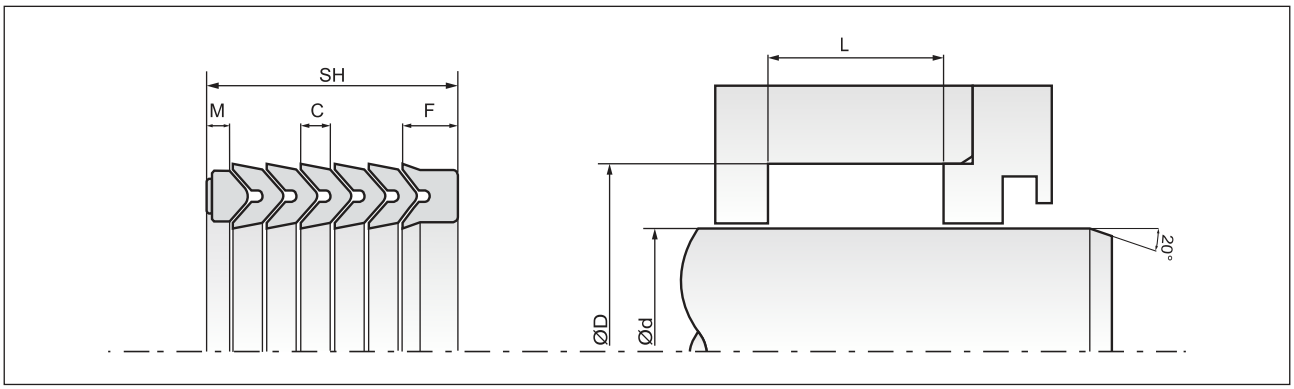

Part No.	d (h9)	D (H9)	SH (Stack Ht.)	F	C	M	Material	Mould No.
S600458312	45.00	61.00	30.00	7.50	3.75	3.75	NBR/FABRIC	SAT-3204
S600458350	45.00	62.00	28.00	7.00	3.50	3.50	NBR/FABRIC	SAT-3471
S600458376	45.00	65.00	20.50	5.12	2.56	2.56	NBR/FABRIC	SAT-1207
S600458508	45.00	65.00	22.50	5.62	2.81	2.81	FKM/FABRIC	SAT-1799
S600451001	45.00	65.00	25.00	6.24	3.12	3.12	NBR	SAT-1287
S600451202	45.00	65.00	26.50	6.62	3.31	3.31	NBR/FABRIC	SAT-1120
S600451002	45.00	65.00	27.50	6.86	3.43	3.43	NBR	SAT-1493
S600458311	45.00	65.00	28.00	7.00	3.50	3.50	NBR/FABRIC	SAT-1273
S60045L501	45.00	65.00	29.00	7.24	3.62	3.62	PU	PPA-588
S600458351	45.00	70.00	52.00	13.00	6.50	6.50	NBR	SAT-3479
S600458347	45.00	70.00	54.00	13.50	6.75	6.75	NBR/FABRIC	SAT-3196
S600458320	45.00	89.00	70.00	17.50	8.75	8.75	NBR/FABRIC	SAT-1123
S600468301	46.00	58.00	25.00	6.24	3.12	3.12	NBR/FABRIC	SAT-2295
S600468302	46.00	65.00	38.10	9.53	4.76	4.76	NBR/FABRIC	SAT-2680
S600478501	47.60	60.00	30.00	7.50	3.75	3.75	FKM/FABRIC	SAT-3656
S600478302	47.62	60.32	25.40	6.34	3.17	3.17	NBR/FABRIC	SAT-3017
S600478401	47.62	60.32	28.57	7.14	3.57	3.57	NBR/FABRIC	SAT-4390
S60047K101	47.62	63.50	30.16	7.54	3.77	3.77	NYLON	SAT-1718
S600478301	47.62	63.50	31.75	7.92	3.96	3.96	NBR/FABRIC	SAT-480
S600476901	47.70	71.70	33.00	8.24	4.12	4.12	FKM	SAT-3427
S600481201	48.00	63.00	21.50	5.36	2.68	2.68	NBR/FABRIC	SAT-1010
S600488501	48.00	63.00	22.50	5.62	2.81	2.81	FKM/FABRIC	SAT-1800
S600488401	48.00	63.00	22.50	5.62	2.81	2.81	NBR/FABRIC	SAT-3835
S600488303	**48.00**	**63.00**	**38.00**	**9.50**	**4.75**	**4.75**	**NBR/FABRIC**	**SAT-672**
S600488502	48.00	68.00	95.00	23.75	11.88	11.88	FKM/FABRIC	SAT-1882
S600498301	49.00	69.00	43.00	10.75	5.38	5.38	NBR/FABRIC	SAT-3674
S60050L501	50.00	63.00	35.00	8.75	4.38	4.38	PU	PPA-3427
S600508329	50.00	64.00	30.00	7.50	3.75	3.75	NBR/FABRIC	SAT-1166
S600508330	50.00	65.00	22.50	5.62	2.81	2.81	NBR/FABRIC	SAT-1399
S600508330	50.00	65.00	22.50	5.62	2.81	2.81	NBR/FABRIC	SAT-1309
S600508513	50.00	65.00	24.00	6.00	3.00	3.00	FKM	SAT-3897
S600508508	50.00	65.00	25.00	6.24	3.12	3.12	FKM/FABRIC	SAT-2819
S600508339	50.00	65.00	25.40	6.34	3.17	3.17	NBR/FABRIC	SAT-1529
S600508502	50.00	65.00	30.00	7.50	3.75	3.75	FKM/FABRIC	SAT-998
S600508326	50.00	65.00	30.00	7.50	3.75	3.75	NBR/FABRIC	SAT-3307
S600508510	50.00	65.00	32.00	8.00	4.00	4.00	FKM/FABRIC	SAT-1064
S600508333	50.00	65.00	33.00	8.24	4.12	4.12	NBR/FABRIC	SAT-1279
S600508319	**50.00**	**65.00**	**33.60**	**8.40**	**4.20**	**4.20**	**NBR/FABRIC**	**SAT-353**
S60050AF01	50.00	65.00	34.50	8.63	4.31	4.31	FKM	SAT-2913
S600507001	50.00	65.00	35.00	8.75	4.38	4.38	FKM	SAT-4040
S600508350	50.00	65.00	36.00	9.00	4.50	4.50	NBR/FABRIC	SAT-2279
S600508331	50.00	70.00	30.00	7.50	3.75	3.75	NBR/FABRIC	SAT-1206
S600508336	50.00	70.00	30.00	7.50	3.75	3.75	NBR/FABRIC	SAT-1400
S60050K201	50.00	70.00	45.00	11.25	5.63	5.63	NBR/FABRIC	SAT-1147
S600508310	50.00	70.00	45.00	11.25	5.63	5.63	NBR/FABRIC	SAT-2631
S600508310	50.00	70.00	45.00	11.25	5.63	5.63	NBR/FABRIC	SAT-1527
S600508310	**50.00**	**70.00**	**45.00**	**11.25**	**5.63**	**5.63**	**NBR/FABRIC**	**SAT-265**
S600508332	50.32	82.50	34.60	8.65	4.33	4.33	NBR/FABRIC	SAT-1257
S600508358	50.80	60.32	19.05	4.76	2.38	2.38	NBR/FABRIC	SAT-3006
S600508368	50.80	60.32	38.35	9.59	4.79	4.79	NBR/FABRIC	SAT-3590
S600508337	50.80	63.50	19.05	4.76	2.38	2.38	NBR/FABRIC	SAT-1449
S600508512	50.80	63.50	24.38	6.08	3.04	3.04	FKM	SAT-3468

Vee pack height can be adjusted by increasing or reducing the numbers of centre rings (C). This calculation can be done by the height of 'C' shown in the table.
Bold sizes are readily available in stock.

Other materials are available on request.

S60

Single Acting Rod Vee Pack

MAX SPARE LIMITED
QUALITY. PRECISION. SPEED.

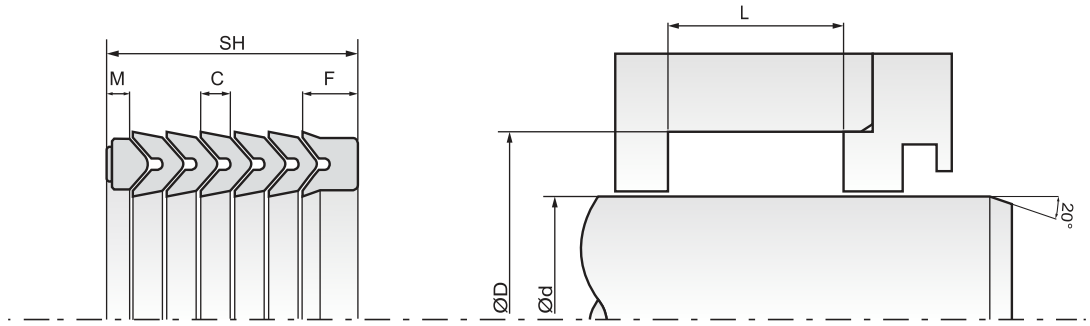

Part No.	d (h9)	D (H9)	SH (Stack Ht.)	F	C	M	Material	Mould No.
S600508341	50.80	63.50	25.40	6.34	3.17	3.17	FKM/FABRIC	SAT-1657
S600508354	50.80	63.50	26.44	6.60	3.30	3.30	NBR/FABRIC	SAT-2721
S600508401	50.80	63.50	31.75	7.92	3.96	3.96	NBR/FABRIC	SAT-3961
S600508367	50.80	66.67	30.00	7.50	3.75	3.75	NBR/FABRIC	SAT-1963
S600508355	50.80	66.67	31.75	7.92	3.96	3.96	NBR/FABRIC	SAT-1658
S60050L401	50.80	66.67	33.68	8.42	4.21	4.21	PU	PPA-1168
S600508369	50.80	66.67	38.35	9.59	4.79	4.79	NBR/FABRIC	SAT-3591
S600508372	50.80	67.46	28.60	7.14	3.57	3.57	NBR/FABRIC	SAT-3657
S600508359	50.80	68.24	31.75	7.92	3.96	3.96	NBR/FABRIC	SAT-3015
S600508308	**50.80**	**69.80**	**44.66**	**11.17**	**5.58**	**5.58**	**NBR/FABRIC**	**SAT-860**
S600508335	50.80	69.85	31.75	7.92	3.96	3.96	NBR/FABRIC	SAT-1308
S600508344	50.80	69.85	38.08	9.52	4.76	4.76	NBR/FABRIC	SAT-1660
S600508303	50.80	69.85	42.85	10.71	5.36	5.36	NBR/FABRIC	SAT-2249
S600508366	50.80	73.02	31.75	7.92	3.96	3.96	NBR/FABRIC	SAT-3320
S600508370	50.80	76.20	38.35	9.59	4.79	4.79	NBR/FABRIC	SAT-3592
S600508342	50.80	76.20	50.80	12.70	6.35	6.35	NBR/FABRIC	SAT-1661
S600518302	51.00	62.00	45.00	11.25	5.63	5.63	NBR/FABRIC	SAT-4396
S600518301	51.00	66.00	35.00	8.75	4.38	4.38	NBR/FABRIC	SAT-3540
S600538306	53.97	66.67	25.40	6.34	3.17	3.17	NBR/FABRIC	SAT-1659
S600538501	53.97	69.85	27.50	6.86	3.43	3.43	FKM/FABRIC	SAT-3554
S600538308	53.97	69.85	31.75	7.92	3.96	3.96	NBR/FABRIC	SAT-3013
S600538303	**53.97**	**69.85**	**33.69**	**8.42**	**4.21**	**4.21**	**NBR/FABRIC**	**SAT-537**
S600538310	53.97	69.85	38.10	9.53	4.76	4.76	NBR/FABRIC	SAT-3323
S600538307	53.97	73.02	34.90	8.73	4.36	4.36	NBR/FABRIC	SAT-2320
S600538309	53.97	73.02	35.05	8.76	4.38	4.38	NBR/FABRIC	SAT-3007
S600538312	53.97	73.02	38.35	9.59	4.79	4.79	NBR/FABRIC	SAT-3598
S600538305	53.97	85.72	69.85	17.46	8.73	8.73	NBR/FABRIC	SAT-1381
S600558316	55.00	67.00	24.00	6.00	3.00	3.00	NBR/FABRIC	SAT-1393
S600558319	55.00	69.85	33.69	8.42	4.21	4.21	NBR/FABRIC	SAT-2203
S600558314	55.00	70.00	21.50	5.36	2.68	2.68	NBR/FABRIC	SAT-967
S600558317	55.00	70.00	22.50	5.62	2.81	2.81	NBR/FABRIC	SAT-1394
S600558505	55.00	70.00	22.50	5.62	2.81	2.81	FKM/FABRIC	SAT-1796
S600558310	55.00	70.00	22.50	5.62	2.81	2.81	NBR/FABRIC	SAT-542
S600556001	55.00	70.00	23.00	5.74	2.87	2.87	PU	PPA-3042
S600558321	55.00	70.00	25.00	6.24	3.12	3.12	NBR/FABRIC	SAT-911
S600558401	55.00	70.00	26.00	6.50	3.25	3.25	NBR/FABRIC	SAT-4093
S600558323	55.00	70.00	30.00	7.50	3.75	3.75	NBR/FABRIC	SAT-1544
S60055K205	55.00	70.00	30.00	7.50	3.75	3.75	CNY	PUC-790
S60055K206	55.00	70.00	30.00	7.50	3.75	3.75	CNY	PPA-646
S600551202	55.00	75.00	29.00	7.24	3.62	3.62	NBR/FABRIC	SAT-1283
S600556801	55.00	75.00	29.00	7.24	3.62	3.62	FKM/FABRIC	SAT-1189
S600558318	55.00	75.00	30.00	7.50	3.75	3.75	NBR/FABRIC	SAT-1402
S600558315	55.00	75.00	30.00	7.50	3.75	3.75	NBR/FABRIC	SAT-1228
S600558318	55.00	75.00	30.00	7.50	3.75	3.75	NBR/FABRIC	SAT-2818
S600558302	55.00	75.00	35.00	8.75	4.38	4.38	NBR/FABRIC	SAT-1065
S600558304	**55.00**	**75.00**	**51.32**	**12.83**	**6.42**	**6.42**	**NBR/FABRIC**	**SAT-570**
S600558402	55.72	68.14	26.92	6.72	3.36	3.36	NBR	SAT-4237
S600568335	56.00	70.00	20.00	5.00	2.50	2.50	NBR/FABRIC	SAT-2519
S600568342	56.00	71.00	16.50	4.12	2.06	2.06	NBR/FABRIC	SAT-3266
S600568513	56.00	71.00	21.00	5.24	2.62	2.62	FKM/FABRIC	SAT-1180
S600561201	56.00	71.00	21.50	5.36	2.68	2.68	NBR/FABRIC	SAT-1077
S600568510	56.00	71.00	22.50	5.62	2.81	2.81	FKM/FABRIC	SAT-1401

Vee pack height can be adjusted by increasing or reducing the numbers of centre rings (C). This calculation can be done by the height of 'C' shown in the table.

Bold sizes are readily available in stock.

Other materials are available on request.

S60

Single Acting Rod Vee Pack

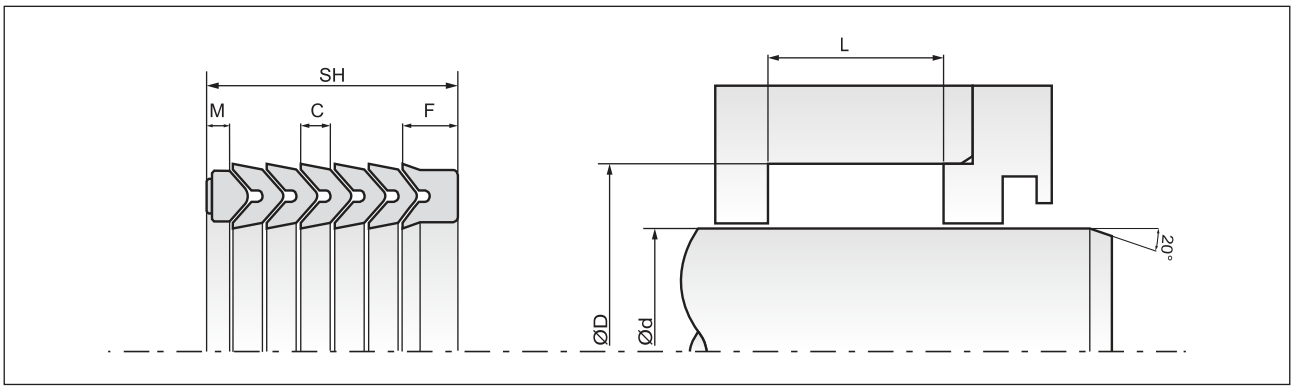

Part No.	d (h9)	D (H9)	SH (Stack Ht.)	F	C	M	Material	Mould No.
S600568341	56.00	71.00	22.50	5.62	2.81	2.81	NBR	SAT-3246
S600568309	56.00	71.00	23.50	5.86	2.93	2.93	NBR/FABRIC	SAT-119
S600568506	56.00	71.00	25.00	6.24	3.12	3.12	NBR/FABRIC	SAT-2620
S600568401	56.00	72.00	30.00	7.50	3.75	3.75	NBR/FABRIC	SAT-3908
S600568322	56.00	72.00	49.00	12.25	6.13	6.13	NBR/FABRIC	SAT-1397
S600566802	56.00	76.00	36.00	9.00	4.50	4.50	FKM/FABRIC	SAT-1474
S600568319	56.00	76.00	37.00	9.25	4.63	4.63	NBR/FABRIC	SAT-1227
S600568302	**56.00**	**76.00**	**44.40**	**11.10**	**5.55**	**5.55**	**NBR/FABRIC**	**SAT-236**
S600568302	56.00	76.00	44.40	11.10	5.55	5.55	NBR/FABRIC	SAT-2634
S600568336	56.20	81.30	51.00	12.75	6.38	6.38	NBR/FABRIC	SAT-2549
S600578318	57.00	70.00	27.00	6.74	3.37	3.37	NBR/FABRIC	SAT-2905
S601128302	57.00	76.00	15.00	3.74	1.87	1.87	NBR/FABRIC	SAT-287
S600578311	57.00	76.00	47.00	11.75	5.88	5.88	NBR/FABRIC	SAT-1445
S600578310	57.15	67.67	39.50	9.88	4.94	4.94	NBR/FABRIC	SAT-1154
S600578313	57.15	69.85	25.40	6.34	3.17	3.17	NBR/FABRIC	SAT-506
S600578309	57.15	69.85	33.00	8.24	4.12	4.12	NBR/FABRIC	SAT-1113
S600578314	57.15	73.02	31.75	7.92	3.96	3.96	NBR/FABRIC	SAT-2839
S600578312	57.15	76.20	38.09	9.52	4.76	4.76	NBR/FABRIC	SAT-1626
S600578312	57.15	76.20	38.09	9.52	4.76	4.76	NBR/FABRIC	SAT-2439
S600578320	57.15	76.20	44.45	11.11	5.56	5.56	NBR/FABRIC	SAT-3161
S600578317	57.15	95.25	71.43	17.86	8.93	8.93	NBR/FABRIC	SAT-2845
S600578306	57.20	70.50	45.00	11.25	5.63	5.63	NBR/FABRIC	SAT-162
S60057L501	57.20	70.50	45.00	11.25	5.63	5.63	PU	PPA-2761
S60058830	58.00	78.00	42.00	10.50	5.25	5.25	NBR/FABRIC	SAT-3094
S600608341	60.00	70.00	30.00	7.50	3.75	3.75	NBR/FABRIC	SAT-2987
S600601201	60.00	75.00	21.50	5.36	2.68	2.68	NBR/FABRIC	SAT-1389
S600608501	60.00	75.00	22.50	5.62	2.81	2.81	FKM/FABRIC	SAT-1795
S600608401	60.00	75.00	22.50	5.62	2.81	2.81	NBR/FABRIC	SAT-3834
S600608402	60.00	75.00	23.50	5.86	2.93	2.93	NBR/FABRIC	SAT-3898
S600608311	60.00	75.00	23.50	5.86	2.93	2.93	NBR/FABRIC	SAT-2666
S600608322	60.00	75.00	29.00	7.24	3.62	3.62	NBR/FABRIC	SAT-1265
S600608504	60.00	75.50	34.50	8.63	4.31	4.31	FKM	SAT-2911
S600608331	60.00	76.00	32.00	8.00	4.00	4.00	NBR/FABRIC	SAT-1654
S600608314	60.00	80.00	35.00	8.75	4.38	4.38	NBR/FABRIC	SAT-764
S600606801	60.00	80.00	36.00	9.00	4.50	4.50	FKM/FABRIC	SAT-1072
S600608340	60.00	80.00	37.00	9.25	4.63	4.63	NBR/FABRIC	SAT-1404
S600608304	**60.00**	**80.00**	**42.15**	**10.54**	**5.27**	**5.27**	**NBR/FABRIC**	**SAT-238**
S600608304	60.00	80.00	42.15	10.54	5.27	5.27	NBR/FABRIC	SAT-2630
S600608326	60.00	85.00	37.00	9.25	4.63	4.63	NBR/FABRIC	SAT-1405
S600608333	60.00	87.00	50.00	12.50	6.25	6.25	NBR/FABRIC	SAT-1766
S600608336	60.00	98.00	85.00	21.25	10.63	10.63	NBR/FABRIC	SAT-2180
S600608342	60.32	73.02	25.40	6.34	3.17	3.17	NBR/FABRIC	SAT-3018
S600608346	60.32	73.02	38.35	9.59	4.79	4.79	NBR/FABRIC	SAT-4112
S600608329	60.32	76.20	27.38	6.84	3.42	3.42	NBR/FABRIC	SAT-1507
S600608406	60.32	76.20	30.14	7.52	3.76	3.76	NBR/FABRIC	SAT-4370
S600608328	60.32	76.20	31.76	7.94	3.97	3.97	NBR/FABRIC	SAT-488
S600608344	60.32	76.20	38.35	9.59	4.79	4.79	NBR/FABRIC	SAT-3599
S600608343	60.32	79.37	38.10	9.53	4.76	4.76	NBR/FABRIC	SAT-3011
S600608320	60.32	85.50	63.00	15.75	7.88	7.88	NBR/FABRIC	SAT-348
S600608327	60.33	79.38	31.75	7.92	3.96	3.96	NBR/FABRIC	SAT-1439
S600638501	63.00	78.00	22.50	5.62	2.81	2.81	FKM/FABRIC	SAT-1705
S600638358	63.00	78.00	23.00	5.74	2.87	2.87	NBR/FABRIC	SAT-2602

Vee pack height can be adjusted by increasing or reducing the numbers of centre rings (C). This calculation can be done by the height of 'C' shown in the table.
Bold sizes are readily available in stock.

Other materials are available on request.

S60

Single Acting Rod Vee Pack

MAX SPARE LIMITED
QUALITY. PRECISION. SPEED.

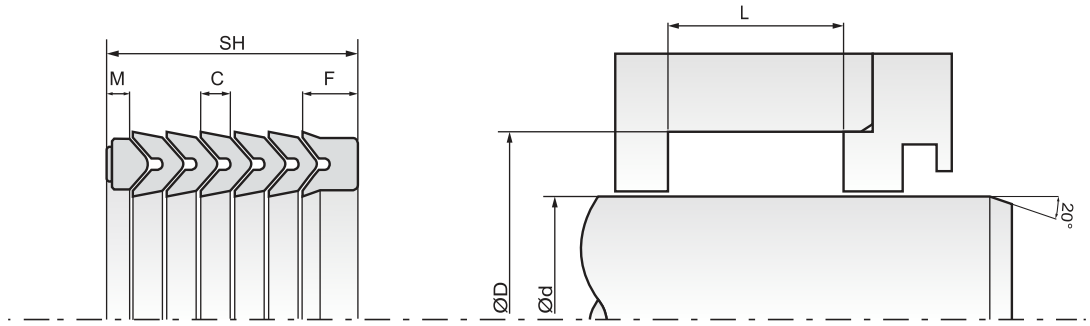

Part No.	d (h9)	D (H9)	SH (Stack Ht.)	F	C	M	Material	Mould No.
S650638506	63.00	78.00	24.13	6.00	3.00	3.00	FKM/FABRIC	SAT-1911
S600638327	63.00	78.00	32.00	8.00	4.00	4.00	NBR/FABRIC	SAT-2645
S600638327	**63.00**	**78.00**	**32.00**	**8.00**	**4.00**	**4.00**	**NBR/FABRIC**	**SAT-177**
S600638312	63.00	80.00	35.00	8.75	4.38	4.38	NBR/FABRIC	SAT-1231
S600638308	**63.00**	**80.00**	**36.00**	**9.00**	**4.50**	**4.50**	**NBR/FABRIC**	**SAT-153**
S600638345	63.00	83.00	22.00	5.50	2.75	2.75	NBR/FABRIC	SAT-1836
S600638376	63.00	83.00	29.00	7.24	3.62	3.62	NBR/FABRIC	SAT-1852
S600637801	63.00	83.00	34.00	8.50	4.25	4.25	NBR/FABRIC	SAT-1596
S600631001	63.00	83.00	35.00	8.75	4.38	4.38	NBR/FABRIC	SAT-2820
S600638336	63.00	83.00	35.00	8.75	4.38	4.38	NBR/FABRIC	SAT-1025
S600638334	63.00	83.00	37.00	9.25	4.63	4.63	NBR/FABRIC	SAT-1226
S600638347	63.00	83.00	38.00	9.50	4.75	4.75	NBR/FABRIC	SAT-1861
S600638353	63.00	83.00	40.00	10.00	5.00	5.00	NBR/FABRIC	SAT-2417
S600638340	63.00	83.00	40.00	10.00	5.00	5.00	NBR/FABRIC	SAT-1622
S600638360	63.00	83.00	41.00	10.25	5.13	5.13	NBR/FABRIC	SAT-2742
S600638367	63.00	83.00	45.00	11.25	5.63	5.63	NBR/FABRIC	SAT-3044
S600638364	63.50	73.02	19.05	4.76	2.38	2.38	NBR/FABRIC	SAT-2840
S600638355	63.50	76.20	24.60	6.14	3.07	3.07	NBR/FABRIC	SAT-264
S600638341	63.50	76.20	25.40	6.34	3.17	3.17	FKM/FABRIC	SAT-1662
S600638375	63.50	76.20	38.35	9.59	4.79	4.79	NBR/FABRIC	SAT-3605
S600638338	63.50	78.00	40.00	10.00	5.00	5.00	NBR/FABRIC	SAT-1396
S600638339	63.50	79.37	25.40	6.34	3.17	3.17	NBR/FABRIC	SAT-1508
S600638507	63.50	79.37	26.51	6.62	3.31	3.31	FKM/FABRIC	SAT-1930
S600638322	63.50	79.37	31.68	7.92	3.96	3.96	NBR/FABRIC	SAT-1546
S600638362	63.50	79.37	31.75	7.92	3.96	3.96	NBR/FABRIC	SAT-1663
S600638356	63.50	80.00	34.40	8.60	4.30	4.30	NBR/FABRIC	SAT-2475
S600638307	63.50	80.00	37.32	9.33	4.67	4.67	NBR/FABRIC	SAT-2455
S600638319	63.50	82.40	46.20	11.55	5.78	5.78	NBR/FABRIC	SAT-499
S600638366	63.50	82.55	25.40	6.34	3.17	3.17	NBR/FABRIC	SAT-3040
S600638315	63.50	82.55	38.10	9.53	4.76	4.76	NBR/FABRIC	SAT-2772
S600638348	63.50	85.72	63.50	15.88	7.94	7.94	NBR/FABRIC	SAT-2427
S600638363	63.50	88.90	50.80	12.70	6.35	6.35	NBR/FABRIC	SAT-2207
S600648301	64.00	90.00	40.00	10.00	5.00	5.00	NBR/FABRIC	SAT-1944
S600651201	65.00	80.00	21.50	5.36	2.68	2.68	NBR/FABRIC	SAT-1121
S600658301	65.00	80.00	25.00	6.24	3.12	3.12	NBR/FABRIC	SAT-3536
S600658302	**65.00**	**80.00**	**34.66**	**8.67**	**4.33**	**4.33**	**NBR/FABRIC**	**SAT-241**
S600658303	**65.00**	**85.00**	**38.66**	**9.67**	**4.83**	**4.83**	**NBR/FABRIC**	**SAT-2473**
S600658310	65.00	85.00	39.00	9.75	4.88	4.88	NBR/FABRIC	SAT-966
S600658313	65.00	85.00	40.00	10.00	5.00	5.00	NBR/FABRIC	SAT-1406
S600658312	65.00	85.00	40.00	10.00	5.00	5.00	NBR/FABRIC	SAT-1225
S600659001	65.00	90.00	62.50	15.63	7.81	7.81	NBR/FABRIC	SAT-4379
S600668303	66.67	79.37	25.40	6.34	3.17	3.17	NBR/FABRIC	SAT-3019
S600668302	66.67	82.55	31.75	7.92	3.96	3.96	FKM/FABRIC	SAT-2841
S600668301	66.67	85.72	38.10	9.53	4.76	4.76	NBR/FABRIC	SAT-1409
S600678301	67.00	87.00	33.00	8.24	4.12	4.12	NBR/FABRIC	SAT-2241
S600678302	67.00	90.00	30.00	7.50	3.75	3.75	NBR/FABRIC	SAT-3621
S600688301	68.00	88.00	30.00	7.50	3.75	3.75	NBR/FABRIC	SAT-3198
S600698315	69.85	82.55	25.40	6.34	3.17	3.17	NBR/FABRIC	SAT-1921
S600698319	69.85	82.55	38.35	9.59	4.79	4.79	NBR/FABRIC	SAT-3603
S600698314	69.85	82.55	50.80	12.70	6.35	6.35	NBR/FABRIC	SAT-2644
S600698317	69.85	85.72	31.75	7.92	3.96	3.96	NBR/FABRIC	SAT-3014
S600698311	69.85	88.90	25.40	6.34	3.17	3.17	NBR/FABRIC	SAT-1450

Vee pack height can be adjusted by increasing or reducing the numbers of centre rings (C). This calculation can be done by the height of 'C' shown in the table.

Bold sizes are readily available in stock.

Other materials are available on request.

S60

Single Acting Rod Vee Pack

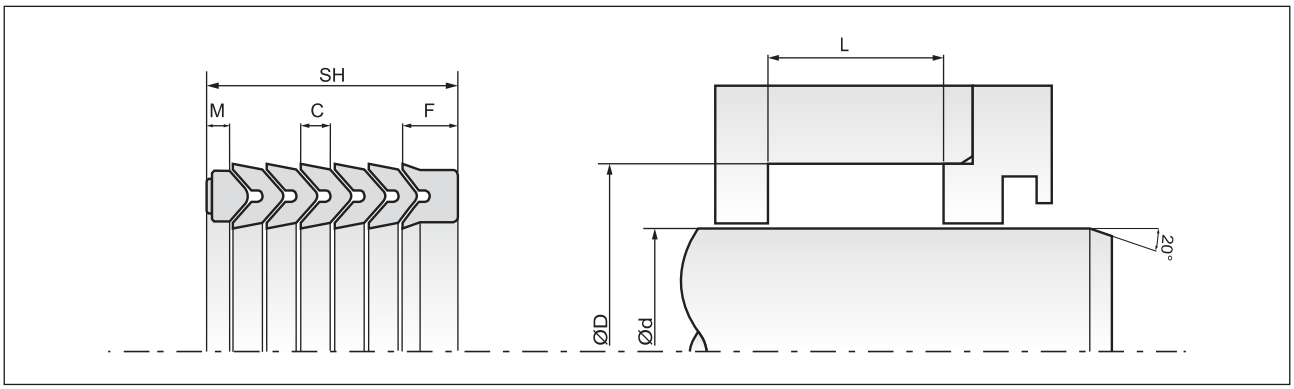

Part No.	d (h9)	D (H9)	SH (Stack Ht.)	F	C	M	Material	Mould No.
S600698316	69.85	88.90	38.10	9.53	4.76	4.76	NBR/FABRIC	SAT-492
S600698320	69.85	88.90	38.35	9.59	4.79	4.79	NBR/FABRIC	SAT-3604
S600698301	69.85	88.90	42.85	10.71	5.36	5.36	NBR/FABRIC	SAT-2250
S600698321	69.85	95.25	38.35	9.59	4.79	4.79	NBR/FABRIC	SAT-3600
S600698318	69.85	95.25	51.05	12.76	6.38	6.38	NBR/FABRIC	SAT-3321
S600698313	69.85	95.25	51.28	12.82	6.41	6.41	NBR/FABRIC	SAT-1666
S600698309	69.88	88.90	33.86	8.47	4.23	4.23	NBR/FABRIC	SAT-1266
S600708345	70.00	83.00	33.30	8.33	4.16	4.16	NBR/FABRIC	SAT-2762
S600708307	**70.00**	**85.00**	**22.50**	**5.62**	**2.81**	**2.81**	**NBR/FABRIC**	**SAT-267**
S600708307	70.00	85.00	22.50	5.62	2.81	2.81	NBR/FABRIC	SAT-2627
S600708348	70.00	85.00	22.50	5.62	2.81	2.81	NBR	SAT-3247
S600708523	70.00	85.00	23.00	5.74	2.87	2.87	FKM/FABRIC	SAT-1071
S600708514	70.00	85.00	25.00	6.24	3.12	3.12	FKM/FABRIC	SAT-1869
S600708349	70.00	88.00	31.00	7.74	3.87	3.87	NBR/FABRIC	SAT-3256
S600708512	70.00	90.00	30.00	7.50	3.75	3.75	FKM/FABRIC	SAT-1713
S600708305	70.00	90.00	32.00	8.00	4.00	4.00	NBR/FABRIC	SAT-2636
S600708324	70.00	90.00	35.32	8.83	4.42	4.42	NBR/FABRIC	SAT-1550
S600708305	**70.00**	**90.00**	**36.00**	**9.00**	**4.50**	**4.50**	**NBR/FABRIC**	**SAT-184**
S600708305	70.00	90.00	36.00	9.00	4.50	4.50	NBR/FABRIC	SAT-1613
S600708356	70.00	90.00	38.00	9.50	4.75	4.75	NBR/FABRIC	SAT-3737
S600706802	70.00	90.00	39.00	9.75	4.88	4.88	FKM/FABRIC	SAT-1459
S600708301	70.00	90.00	40.00	10.00	5.00	5.00	NBR/FABRIC	SAT-2416
S600708301	70.00	90.00	40.00	10.00	5.00	5.00	NBR/FABRIC	SAT-1407
S600708507	70.00	90.00	40.00	10.00	5.00	5.00	FKM/FABRIC	SAT-564
S600708321	70.00	90.00	40.00	10.00	5.00	5.00	NBR/FABRIC	SAT-1224
S600701002	70.00	90.00	40.00	10.00	5.00	5.00	NBR	SAT-2952
S600701002	70.00	90.00	40.00	10.00	5.00	5.00	NBR	PPA-1965
S600708333	70.00	95.00	40.00	10.00	5.00	5.00	NBR/FABRIC	SAT-2146
S600728601	72.00	86.00	30.00	7.50	3.75	3.75	FKM/FABRIC	SAT-4116
S600738301	73.00	96.00	50.00	12.50	6.25	6.25	NBR/FABRIC	SAT-2577
S600738302	73.02	85.72	50.80	12.70	6.35	6.35	NBR/FABRIC	SAT-2668
S600738601	73.02	92.07	34.92	8.73	4.37	4.37	FKM/FABRIC	SAT-4371
S600748301	74.60	100.00	44.85	11.21	5.61	5.61	NBR/FABRIC	SAT-1324
S600748302	74.61	100.01	44.85	11.21	5.61	5.61	NBR/FABRIC	SBT-1675
S600748401	74.87	87.40	26.92	6.72	3.36	3.36	NBR/FABRIC	SAT-4238
S600758313	75.00	87.00	25.00	6.24	3.12	3.12	NBR/FABRIC	SAT-1395
S600758319	75.00	90.00	22.50	5.62	2.81	2.81	NBR/FABRIC	SAT-2562
S600758303	75.00	90.00	30.00	7.50	3.75	3.75	NBR/FABRIC	SAT-1066
S600758311	75.00	90.00	40.00	10.00	5.00	5.00	NBR/FABRIC	SAT-1356
S600758318	75.00	90.00	40.00	10.00	5.00	5.00	NBR/FABRIC	SAT-2736
S600758317	75.00	90.00	70.00	17.50	8.75	8.75	NBR/FABRIC	SAT-2669
S600758401	75.00	95.00	34.00	8.50	4.25	4.25	NBR	SAT-4335
S600751201	75.00	95.00	39.00	9.75	4.88	4.88	NBR/FABRIC	SAT-1460
S600758301	75.00	95.00	40.00	10.00	5.00	5.00	NBR/FABRIC	SAT-2632
S600758301	**75.00**	**95.00**	**40.00**	**10.00**	**5.00**	**5.00**	**NBR/FABRIC**	**SAT-2004**
S600758312	75.00	100.00	34.00	8.50	4.25	4.25	NBR/FABRIC	SAT-1398
S600758304	**75.00**	**100.00**	**40.00**	**10.00**	**5.00**	**5.00**	**NBR/FABRIC**	**SAT-163**
S600768330	76.00	95.00	40.00	10.00	5.00	5.00	NBR/FABRIC	SAT-3392
S60076A602	76.00	95.00	40.00	10.00	5.00	5.00	NBR/FABRIC	SAT-4119
S600768317	76.00	95.00	60.00	15.00	7.50	7.50	NBR/FABRIC	SAT-1444
S600768322	76.00	100.00	36.00	9.00	4.50	4.50	NBR/FABRIC	SAT-2032
S600768327	76.20	86.90	26.00	6.50	3.25	3.25	NBR/FABRIC	SAT-3043

Vee pack height can be adjusted by increasing or reducing the numbers of centre rings (C). This calculation can be done by the height of 'C' shown in the table.
Bold sizes are readily available in stock.

Other materials are available on request.

S60

Single Acting Rod Vee Pack

MAX SPARE LIMITED
QUALITY. PRECISION. SPEED.

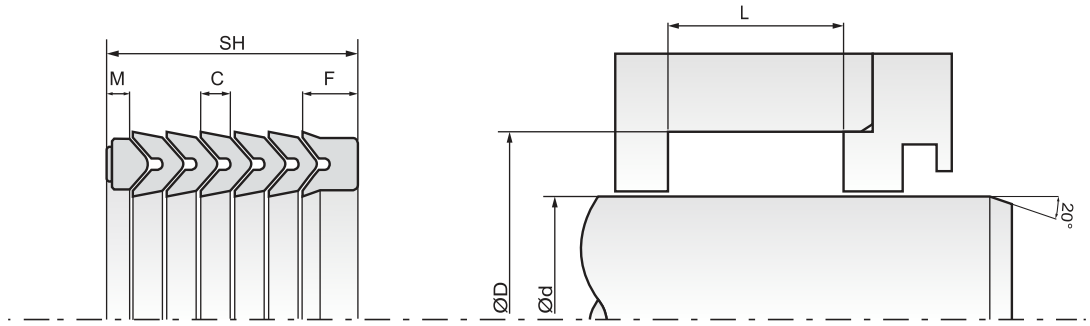

Part No.	d (h9)	D (H9)	SH (Stack Ht.)	F	C	M	Material	Mould No.
S600768325	76.20	88.90	25.40	6.34	3.17	3.17	FKM/FABRIC	SAT-494
S600769001	76.20	88.90	25.70	6.42	3.21	3.21	NBR/FABRIC	SAT-4067
S600762101	76.20	88.90	26.67	6.66	3.33	3.33	CR/FABRIC	SAT-4273
S600768331	76.20	88.90	38.35	9.59	4.79	4.79	NBR/FABRIC	SAT-3601
S600768319	76.20	92.07	31.73	7.92	3.96	3.96	NBR/FABRIC	SAT-1665
S600768319	76.20	92.07	31.73	7.92	3.96	3.96	NBR/FABRIC	SAT-3023
S600768333	76.20	92.07	31.75	7.92	3.96	3.96	NBR/FABRIC	SAT-3816
S600768324	76.20	95.25	26.23	6.54	3.27	3.27	NBR/FABRIC	SAT-2209
S600768311	76.20	95.25	33.33	8.33	4.17	4.17	NBR/FABRIC	SAT-762
S600768316	76.20	95.25	38.10	9.53	4.76	4.76	NBR/FABRIC	SAT-493
S600768332	76.20	95.25	38.35	9.59	4.79	4.79	NBR/FABRIC	SAT-3602
S600768334	76.20	98.42	40.46	10.12	5.06	5.06	NBR/FABRIC	SAT-3944
S600768326	76.20	101.60	50.80	12.70	6.35	6.35	NBR/FABRIC	SBT-2053
S600788301	78.00	100.00	35.00	8.75	4.38	4.38	NBR/FABRIC	SAT-2131
S600798302	79.00	102.00	60.00	15.00	7.50	7.50	NBR/FABRIC	SBT-2163
S600798305	79.37	92.07	38.35	9.59	4.79	4.79	NBR/FABRIC	SAT-3597
S600798303	79.37	98.42	38.10	9.53	4.76	4.76	NBR/FABRIC	SAT-3322
S600798307	79.37	104.77	38.35	9.59	4.79	4.79	NBR/FABRIC	SBT-2584
S600798301	79.37	104.77	47.62	11.91	5.95	5.95	NBR/FABRIC	SBT-667
S600806802	80.00	95.00	21.50	5.36	2.68	2.68	FKM/FABRIC	SAT-1188
S600808306	80.00	95.00	22.50	5.62	2.81	2.81	NBR/FABRIC	SAT-748
S600808302	**80.00**	**95.00**	**23.29**	**5.82**	**2.91**	**2.91**	**NBR/FABRIC**	**SAT-2474**
S600808337	80.00	95.00	30.00	7.50	3.75	3.75	NBR/FABRIC	SAT-3746
S600808333	80.00	95.00	35.00	8.75	4.38	4.38	NBR/FABRIC	SAT-3087
S600808330	80.00	95.00	40.00	10.00	5.00	5.00	NBR/FABRIC	SAT-2927
S600808318	80.00	96.00	35.00	8.75	4.38	4.38	NBR/FABRIC	SAT-1421
S600808328	80.00	100.00	32.00	8.00	4.00	4.00	NBR/FABRIC	SAT-1286
S600808329	80.00	100.00	35.00	8.75	4.38	4.38	FKM/FABRIC	SAT-2830
S600801202	80.00	100.00	39.00	9.75	4.88	4.88	NBR/FABRIC	SAT-1335
S600808301	80.00	100.00	40.00	10.00	5.00	5.00	NBR/FABRIC	SAT-1408
S600808301	**80.00**	**100.00**	**40.00**	**10.00**	**5.00**	**5.00**	**NBR/FABRIC**	**SAT-120**
S600251001	80.00	100.00	40.00	10.00	5.00	5.00	NBR	SAT-3140
S600251001	80.00	100.00	40.00	10.00	5.00	5.00	PU	PPA-2177
S60080L502	80.00	100.00	45.00	11.25	5.63	5.63	PU	PPA-1315
S600808321	80.00	101.00	50.00	12.50	6.25	6.25	NBR/FABRIC	SBT-1519
S600808335	80.00	103.00	45.00	11.25	5.63	5.63	NBR/FABRIC	SBT-2434
S600808303	80.00	105.00	36.52	9.13	4.57	4.57	NBR/FABRIC	SBT-517
S600802101	80.94	93.64	27.30	6.80	3.40	3.40	CR	SAT-3372
S600802101	80.94	93.64	27.30	6.80	3.40	3.40	HYT-HYTREL	PPA-2534
S600828323	82.00	101.60	38.61	9.65	4.83	4.83	NBR/FABRIC	SBT-3111
S600828320	82.00	102.00	45.00	11.25	5.63	5.63	NBR/FABRIC	SBT-2569
S600828314	82.00	105.00	35.00	8.75	4.38	4.38	NBR/FABRIC	SBT-1649
S60082L501	82.50	108.00	78.50	19.63	9.81	9.81	PU	PPA-1057
S600828316	82.55	92.07	38.10	9.53	4.76	4.76	NBR/FABRIC	SAT-3318
S600828501	82.55	95.25	16.28	4.06	2.03	2.03	FKM/FABRIC	SAT-3300
S600828315	82.55	95.25	25.40	6.34	3.17	3.17	NBR/FABRIC	SAT-3022
S600828317	82.55	98.42	31.75	7.92	3.96	3.96	NBR/FABRIC	SAT-3319
S600828401	82.55	101.60	34.92	8.73	4.37	4.37	NBR/FABRIC	SBT-506
S600828313	82.55	101.60	38.08	9.52	4.76	4.76	NBR/FABRIC	SBT-1275
S600828322	82.55	101.60	38.10	9.53	4.76	4.76	NBR/FABRIC	SBT-2778
S600828310	**82.55**	**101.60**	**38.61**	**9.65**	**4.83**	**4.83**	**NBR/FABRIC**	**SBT-1778**
S600828318	82.55	107.95	50.80	12.70	6.35	6.35	NBR/FABRIC	SBT-2410

Vee pack height can be adjusted by increasing or reducing the numbers of centre rings (C). This calculation can be done by the height of 'C' shown in the table.

Bold sizes are readily available in stock.

Other materials are available on request.

S60

Single Acting Rod Vee Pack

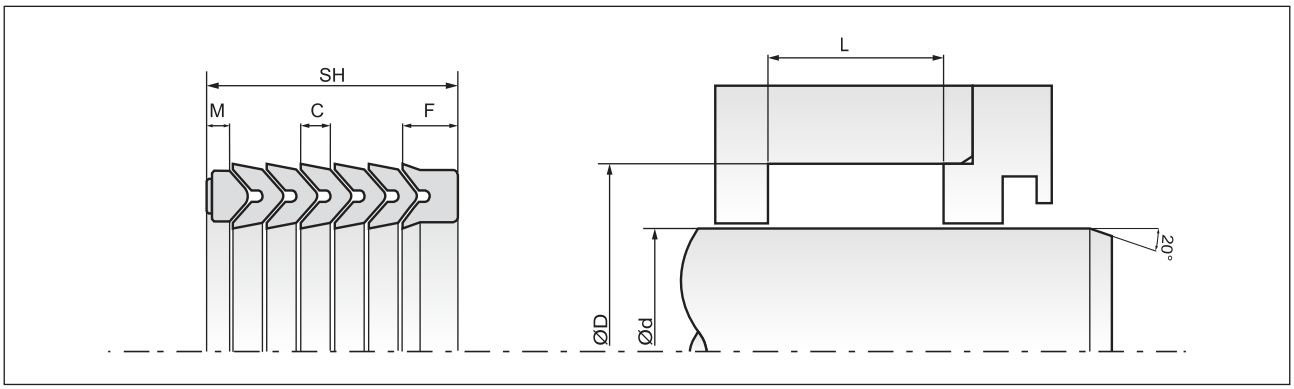

Part No.	d (h9)	D (H9)	SH (Stack Ht.)	F	C	M	Material	Mould No.
S600858319	85.00	100.00	21.50	5.36	2.68	2.68	NBR/FABRIC	SAT-1470
S600858316	85.00	100.00	23.06	5.76	2.88	2.88	NBR/FABRIC	SAT-251
S60085L501	85.00	100.00	24.00	6.00	3.00	3.00	PU	PPA-2404
S600858308	85.00	100.00	40.00	10.00	5.00	5.00	NBR/FABRIC	SAT-1031
S600858303	**85.00**	**105.00**	**40.00**	**10.00**	**5.00**	**5.00**	**NBR/FABRIC**	**SBT-188**
S600858502	85.00	105.00	65.00	16.25	8.13	8.13	FKM/FABRIC	SBT-2135
S600857702	85.69	104.80	43.53	10.88	5.44	5.44	GLT	SBT-1613
S600857701	85.69	123.85	76.07	19.02	9.51	9.51	GLT	SBT-1614
S600858315	85.72	101.60	31.75	7.92	3.96	3.96	NBR/FABRIC	SBT-2047
S600858309	85.72	109.54	33.34	8.34	4.17	4.17	NBR/FABRIC	SBT-903
S600868301	86.00	105.00	40.00	10.00	5.00	5.00	NBR/FABRIC	SBT-1061
S600888311	88.50	107.00	35.00	8.75	4.38	4.38	NBR/FABRIC	SBT-2377
S600888401	88.90	101.60	20.62	5.14	2.57	2.57	NBR/FABRIC	SBT-2791
S600888316	88.90	101.60	25.40	6.34	3.17	3.17	FKM/FABRIC	SBT-1529
S600888324	88.90	101.60	38.35	9.59	4.79	4.79	NBR/FABRIC	SBT-2585
S600888313	88.90	104.77	28.55	7.12	3.56	3.56	NBR/FABRIC	SBT-1189
S600888320	88.90	104.77	31.75	7.92	3.96	3.96	NBR/FABRIC	SBT-2330
S600888403	88.90	107.95	25.40	6.34	3.17	3.17	NBR/FABRIC	SBT-2788
S600888317	88.90	107.95	38.10	9.53	4.76	4.76	NBR/FABRIC	SBT-2048
S600888402	88.90	114.30	36.50	9.13	4.56	4.56	NBR/FABRIC	SBT-2792
S600888326	88.90	114.30	38.35	9.59	4.79	4.79	NBR/FABRIC	SBT-2586
S600888322	88.90	114.30	40.00	10.00	5.00	5.00	NBR/FABRIC	SBT-136
S600888304	**88.90**	**114.30**	**47.08**	**11.77**	**5.89**	**5.89**	**NBR/FABRIC**	**SBT-745**
S600888315	88.90	114.30	55.56	13.89	6.95	6.95	NBR/FABRIC	SBT-1935
S600898301	89.00	108.00	30.00	7.50	3.75	3.75	NBR/FABRIC	SBT-1509
S600898302	89.00	109.00	40.00	10.00	5.00	5.00	NBR/FABRIC	SBT-1520
S600908308	**90.00**	**105.00**	**22.50**	**5.62**	**2.81**	**2.81**	**NBR/FABRIC**	**SBT-295**
S600908512	90.00	105.00	22.50	5.62	2.81	2.81	FKM/FABRIC	SBT-2899
S600908343	90.00	105.00	30.00	7.50	3.75	3.75	NBR/FABRIC	SBT-1665
S600908509	90.00	105.00	31.75	7.92	3.96	3.96	FKM/FABRIC	SBT-1302
S600908339	90.00	105.00	40.00	10.00	5.00	5.00	NBR/FABRIC	SBT-2005
S600908302	90.00	105.00	42.33	10.58	5.29	5.29	NBR/FABRIC	SBT-866
S600908303	90.00	105.00	44.69	11.17	5.59	5.59	NBR/FABRIC	SBT-1898
S600908346	90.00	105.00	50.00	12.50	6.25	6.25	NBR/FABRIC	SBT-1793
S600908331	90.00	110.00	25.00	6.24	3.12	3.12	NBR/FABRIC	SBT-1206
S600908327	90.00	110.00	26.00	6.50	3.25	3.25	NBR/FABRIC	SBT-1116
S600908340	90.00	110.00	28.00	7.00	3.50	3.50	NBR/FABRIC	SBT-1025
S600908341	90.00	110.00	33.00	8.24	4.12	4.12	NBR/FABRIC	SBT-541
S600908305	**90.00**	**110.00**	**33.00**	**8.24**	**4.12**	**4.12**	**NBR/FABRIC**	**SBT-3230**
S600908513	90.00	110.00	36.50	9.13	4.56	4.56	FKM/FABRIC	SBT-1715
S600901202	90.00	110.00	39.00	9.75	4.88	4.88	NBR/FABRIC	SBT-1138
S600908328	90.00	110.00	40.00	10.00	5.00	5.00	NBR/FABRIC	SBT-1118
S600908312	90.00	110.00	40.00	10.00	5.00	5.00	NBR/FABRIC	SBT-1875
S600901002	90.00	110.00	40.00	10.00	5.00	5.00	NBR	PPA-1620
S600908312	**90.00**	**110.00**	**40.00**	**10.00**	**5.00**	**5.00**	**NBR/FABRIC**	**SBT-784**
S600901002	90.00	110.00	40.00	10.00	5.00	5.00	NBR	SBT-1901
S600908328	90.00	110.00	40.00	10.00	5.00	5.00	NBR/FABRIC	SBT-260
S600908306	**90.00**	**115.00**	**36.53**	**9.13**	**4.57**	**4.57**	**NBR/FABRIC**	**SBT-335**
S600928401	92.50	120.00	54.00	13.50	6.75	6.75	NBR/FABRIC	SBT-3154
S600948301	94.00	114.00	45.00	11.25	5.63	5.63	NBR/FABRIC	SBT-2570
S600958309	95.00	110.00	22.50	5.62	2.81	2.81	NBR/FABRIC	SBT-983
S600958323	95.00	110.00	45.00	11.25	5.63	5.63	NBR/FABRIC	SBT-2685

Vee pack height can be adjusted by increasing or reducing the numbers of centre rings (C). This calculation can be done by the height of 'C' shown in the table.
Bold sizes are readily available in stock.

Other materials are available on request.

S60

Single Acting Rod Vee Pack

MAX SPARE LIMITED
QUALITY. PRECISION. SPEED.

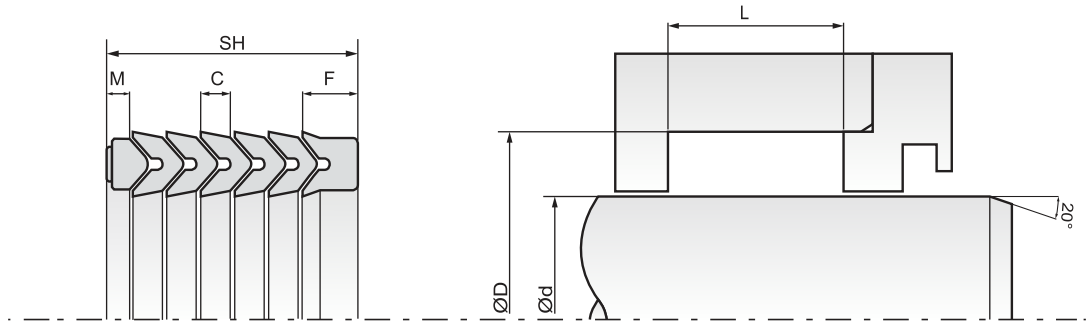

Part No.	d (h9)	D (H9)	SH (Stack Ht.)	F	C	M	Material	Mould No.
S600958401	95.00	115.00	20.60	5.14	2.57	2.57	NBR/FABRIC	SBT-2790
S600958307	**95.00**	**115.00**	**40.00**	**10.00**	**5.00**	**5.00**	**NBR/FABRIC**	**SBT-246**
S600958307	95.00	115.00	40.00	10.00	5.00	5.00	NBR/FABRIC	SBT-1894
S600958324	95.00	115.00	45.00	11.25	5.63	5.63	NBR/FABRIC	SBT-2703
S600958316	95.00	120.00	48.00	12.00	6.00	6.00	NBR/FABRIC	SBT-370
S600958312	95.00	120.00	50.00	12.50	6.25	6.25	NBR/FABRIC	SBT-1117
S600958302	**95.00**	**120.00**	**54.00**	**13.50**	**6.75**	**6.75**	**NBR/FABRIC**	**SBT-367**
S600958317	95.00	130.00	50.00	12.50	6.25	6.25	NBR/FABRIC	SBT-2139
S600958310	95.25	107.95	25.40	6.34	3.17	3.17	NBR/FABRIC	SBT-1055
S600958320	95.25	111.12	28.44	7.10	3.55	3.55	NBR/FABRIC	SBT-2419
S600958321	95.25	111.12	38.35	9.59	4.79	4.79	NBR/FABRIC	SBT-2587
S600958318	95.25	114.30	38.10	9.53	4.76	4.76	NBR/FABRIC	SBT-3190
S600958319	95.25	120.65	38.10	9.53	4.76	4.76	NBR/FABRIC	SBT-2403
S600958308	95.25	127.00	42.07	10.52	5.26	5.26	NBR/FABRIC	SBT-904
S600988301	98.42	120.65	31.75	7.92	3.96	3.96	NBR/FABRIC	SBT-1190
S600998302	99.80	113.65	36.00	9.00	4.50	4.50	NBR/FABRIC	SBT-1534
S601006802	100.00	115.00	29.00	7.24	3.62	3.62	FKM/FABRIC	SBT-973
S601008308	**100.00**	**115.00**	**30.00**	**7.50**	**3.75**	**3.75**	**NBR/FABRIC**	**SBT-221**
S601008347	100.00	115.00	32.00	8.00	4.00	4.00	NBR/FABRIC	SBT-2170
S601008508	100.00	120.00	30.00	7.50	3.75	3.75	FKM/FABRIC	SBT-1956
S601008340	100.00	120.00	32.00	8.00	4.00	4.00	NBR/FABRIC	SBT-699
S601008303	100.00	120.00	37.20	9.30	4.65	4.65	NBR/FABRIC	SBT-1209
S601001201	100.00	120.00	39.00	9.75	4.88	4.88	NBR/FABRIC	SBT-865
S601008309	**100.00**	**120.00**	**40.00**	**10.00**	**5.00**	**5.00**	**NBR/FABRIC**	**SBT-236**
S601008309	100.00	120.00	40.00	10.00	5.00	5.00	NBR/FABRIC	SBT-1880
S601008304	100.00	120.00	41.32	10.33	5.17	5.17	NBR/FABRIC	SBT-1455
S601008341	100.00	120.00	50.00	12.50	6.25	6.25	NBR/FABRIC	SBT-1451
S601008348	100.00	120.00	51.00	12.75	6.38	6.38	NBR/FABRIC	SBT-2037
S601007801	100.00	125.00	31.00	7.74	3.87	3.87	NBR/FABRIC	SBT-1137
S601008332	100.00	125.00	50.00	12.50	6.25	6.25	NBR/FABRIC	SBT-1248
S601008339	100.00	125.00	51.50	12.88	6.44	6.44	NBR/FABRIC	SBT-1546
S601008307	**100.00**	**125.00**	**51.50**	**12.88**	**6.44**	**6.44**	**NBR/FABRIC**	**SBT-157**
S601008307	100.00	125.00	51.50	12.88	6.44	6.44	NBR/FABRIC	SBT-1881
S601008353	100.00	125.00	54.00	13.50	6.75	6.75	NBR/FABRIC	SBT-2907
S601008603	100.00	128.00	42.50	10.63	5.31	5.31	FKM/FABRIC	SBT-3158
S601018306	101.00	124.00	60.00	15.00	7.50	7.50	NBR/FABRIC	SBT-833
S601018304	101.60	114.30	25.40	6.34	3.17	3.17	NBR/FABRIC	SBT-505
S601012102	101.60	114.30	26.67	6.66	3.33	3.33	CR/FABRIC	SBT-2520
S601012101	101.60	114.30	27.70	6.92	3.46	3.46	CR/FABRIC	SBT-2513
S601018320	101.60	114.30	38.35	9.59	4.79	4.79	NBR/FABRIC	SBT-2597
S601018310	101.60	114.30	50.80	12.70	6.35	6.35	NBR/FABRIC	SBT-1909
S601018314	101.60	114.50	22.00	5.50	2.75	2.75	NBR/FABRIC	SBT-2201
S601018312	101.60	117.47	31.75	7.92	3.96	3.96	NBR/FABRIC	SBT-2178
S601018309	101.60	120.65	34.00	8.50	4.25	4.25	NBR/FABRIC	SBT-1767
S601018302	101.60	120.65	38.10	9.53	4.76	4.76	NBR/FABRIC	SBT-2329
S601018313	101.60	123.82	38.10	9.53	4.76	4.76	NBR/FABRIC	SBT-2177
S601018321	101.60	123.82	44.45	11.11	5.56	5.56	NBR/FABRIC	SBT-2771
S601018315	101.60	127.00	31.75	7.92	3.96	3.96	NBR/FABRIC	SBT-1225
S601018319	101.60	127.00	38.35	9.59	4.79	4.79	NBR/FABRIC	SBT-2595
S601018502	101.60	127.00	41.27	10.32	5.16	5.16	FKM/FABRIC	SBT-2260
S601018301	**101.60**	**127.00**	**42.85**	**10.71**	**5.36**	**5.36**	**NBR/FABRIC**	**SBT-747**
S601018316	101.60	127.00	45.00	11.25	5.63	5.63	NBR/FABRIC	SBT-2283

Vee pack height can be adjusted by increasing or reducing the numbers of centre rings (C). This calculation can be done by the height of 'C' shown in the table.

Bold sizes are readily available in stock.

Other materials are available on request.

S60

Single Acting Rod Vee Pack

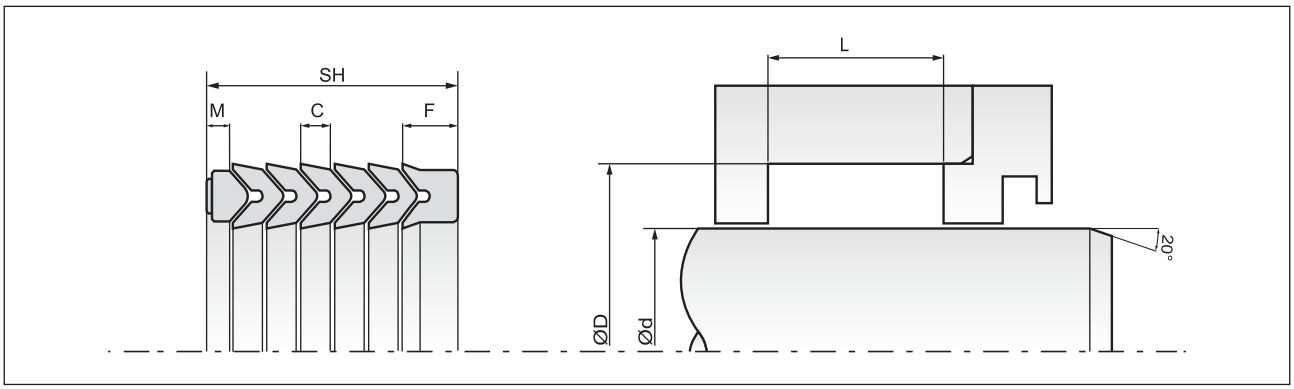

Part No.	d (h9)	D (H9)	SH (Stack Ht.)	F	C	M	Material	Mould No.
S601018317	101.60	127.00	45.97	11.49	5.75	5.75	NBR/FABRIC	SBT-2535
S60101M101	101.60	139.70	56.80	14.20	7.10	7.10	HNBR	SBT-1746
S60102D601	102.00	121.00	50.00	12.50	6.25	6.25	HNBR/FABRIC	SBT-923
S601038301	103.00	130.00	100.00	25.00	12.50	12.50	NBR/FABRIC	SBT-1562
S601042101	104.77	117.47	27.30	6.80	3.40	3.40	CR	SBT-2476
S601042101	104.77	117.47	27.30	6.80	3.40	3.40	HYT	PPA-2536
S601058307	105.00	120.00	22.50	5.62	2.81	2.81	NBR/FABRIC	SBT-145
S601058304	105.00	120.00	37.20	9.30	4.65	4.65	NBR/FABRIC	SBT-1191
S601058310	105.00	130.00	40.00	10.00	5.00	5.00	NBR/FABRIC	SBT-1110
S601058312	105.00	130.00	42.50	10.63	5.31	5.31	NBR/FABRIC	SBT-2158
S601058502	105.00	135.00	50.50	12.63	6.31	6.31	FKM/FABRIC	SBT-1701
S601068302	106.00	126.00	38.00	9.50	4.75	4.75	NBR/FABRIC	SBT-1922
S601068303	106.00	127.00	42.85	10.71	5.36	5.36	NBR/FABRIC	SBT-3112
S601068301	106.85	121.60	34.00	8.50	4.25	4.25	NBR/FABRIC	SBT-1535
S601078304	107.95	120.65	25.40	6.34	3.17	3.17	NBR/FABRIC	SBT-1247
S601078311	107.95	120.65	38.35	9.59	4.79	4.79	NBR/FABRIC	SBT-2594
S601078310	107.95	123.82	38.10	9.53	4.76	4.76	NBR/FABRIC	SBT-2407
S601078401	107.95	127.00	25.40	6.34	3.17	3.17	NBR/FABRIC	SBT-2794
S601078309	107.95	127.00	29.97	7.48	3.74	3.74	NBR/FABRIC	SBT-2422
S601078312	107.95	127.00	38.35	9.59	4.79	4.79	NBR/FABRIC	SBT-2581
S601078308	107.95	133.35	50.80	12.70	6.35	6.35	NBR/FABRIC	SBT-2328
S601078307	107.95	133.35	60.32	15.08	7.54	7.54	NBR/FABRIC	SBT-1642
S601098301	109.93	121.60	27.50	6.86	3.43	3.43	NBR/FABRIC	SBT-1536
S601108333	110.00	123.00	45.00	11.25	5.63	5.63	NBR/FABRIC	SBT-1322
S601106801	110.00	125.00	29.00	7.24	3.62	3.62	FKM/FABRIC	SBT-817
S601108315	**110.00**	**125.00**	**30.00**	**7.50**	**3.75**	**3.75**	**NBR/FABRIC**	**SBT-469**
S601108315	110.00	125.00	30.00	7.50	3.75	3.75	NBR/FABRIC	SBT-1876
S601108515	110.00	125.00	30.50	7.62	3.81	3.81	FKM/FABRIC	SBT-2490
S601108302	110.00	130.00	36.00	9.00	4.50	4.50	NBR/FABRIC	SBT-867
S601108505	110.00	130.00	39.00	9.75	4.88	4.88	NBR/FABRIC	SBT-806
S601108301	**110.00**	**130.00**	**40.00**	**10.00**	**5.00**	**5.00**	**NBR/FABRIC**	**SBT-296**
S60110L501	110.00	130.00	40.00	10.00	5.00	5.00	PU	PPA-1209
S601106701	110.00	130.00	40.00	10.00	5.00	5.00	FKM/FABRIC	SBT-2480
S601108335	110.00	132.00	50.00	12.50	6.25	6.25	NBR/FABRIC	SBT-2024
S601108319	110.00	135.00	42.50	10.63	5.31	5.31	NBR/FABRIC	SBT-291
S601108340	110.00	135.00	43.00	10.75	5.38	5.38	NBR/FABRIC	SBT-1823
S601108507	110.00	135.00	50.00	12.50	6.25	6.25	FKM/FABRIC	SBT-1028
S601108304	**110.00**	**135.00**	**55.32**	**13.83**	**6.92**	**6.92**	**NBR/FABRIC**	**SBT-743**
S601108305	**110.00**	**135.00**	**57.00**	**14.25**	**7.13**	**7.13**	**NBR/FABRIC**	**SBT-209**
S601108332	110.00	140.00	57.00	14.25	7.13	7.13	NBR/FABRIC	SBT-1323
S601108323	**110.00**	**140.00**	**60.00**	**15.00**	**7.50**	**7.50**	**NBR/FABRIC**	**SBT-744**
S601108323	110.00	140.00	60.00	15.00	7.50	7.50	NBR/FABRIC	SBT-1873
S601117701	111.09	123.85	31.77	7.94	3.97	3.97	GLT	SBT-1615
S601118302	111.12	120.65	25.40	6.34	3.17	3.17	NBR/FABRIC	SBT-1553
S601118303	111.12	123.82	25.40	6.34	3.17	3.17	NBR/FABRIC	SBT-2424
S601118304	111.12	123.82	38.35	9.59	4.79	4.79	NBR/FABRIC	SBT-2580
S601118301	111.12	136.52	32.41	8.10	4.05	4.05	NBR/FABRIC	SBT-1184
S601128302	112.00	132.00	40.00	10.00	5.00	5.00	NBR/FABRIC	SBT-287
S601148315	114.00	133.00	32.00	8.00	4.00	4.00	NBR/FABRIC	SBT-1521
S601148320	114.00	134.00	50.00	12.50	6.25	6.25	NBR/FABRIC	SBT-2242
S601148318	114.30	127.00	25.40	6.34	3.17	3.17	NBR/FABRIC	SBT-1618
S60114K101	114.30	127.00	25.70	6.42	3.21	3.21	NYLON	SBT-3043

Vee pack height can be adjusted by increasing or reducing the numbers of centre rings (C). This calculation can be done by the height of 'C' shown in the table.
Bold sizes are readily available in stock.

Other materials are available on request.

S60

Single Acting Rod Vee Pack

MAX SPARE LIMITED
QUALITY. PRECISION. SPEED.

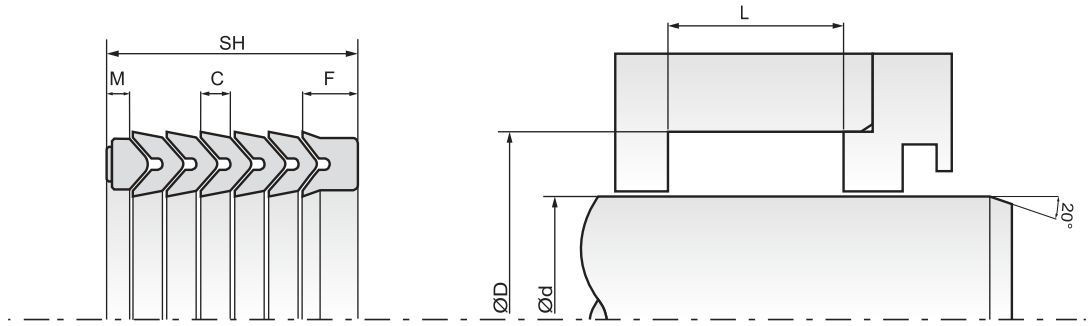

Part No.	d (h9)	D (H9)	SH (Stack Ht.)	F	C	M	Material	Mould No.
S601148325	114.30	127.00	38.35	9.59	4.79	4.79	NBR/FABRIC	SBT-2579
S601148314	114.30	130.17	31.71	7.92	3.96	3.96	NBR/FABRIC	SBT-1249
S601148329	114.30	130.17	31.75	7.92	3.96	3.96	NBR/FABRIC	SBT-2772
S601148321	114.30	133.35	38.10	9.53	4.76	4.76	NBR/FABRIC	SBT-2322
S601148324	114.30	136.52	38.10	9.53	4.76	4.76	NBR/FABRIC	SBT-2406
S601148328	114.30	136.52	49.60	12.40	6.20	6.20	NBR/FABRIC	SBT-2621
S601148327	114.30	139.70	38.35	9.59	4.79	4.79	NBR/FABRIC	SBT-2590
S601148501	114.30	139.70	44.45	11.11	5.56	5.56	FKM/FABRIC	SBT-1703
S601148322	114.30	139.70	50.80	12.70	6.35	6.35	NBR/FABRIC	SBT-2321
S601148401	114.30	146.05	53.97	13.49	6.75	6.75	NBR/FABRIC	SBT-3165
S601158303	115.00	130.00	30.00	7.50	3.75	3.75	NBR/FABRIC	SBT-173
S601158318	115.00	135.00	30.00	7.50	3.75	3.75	NBR/FABRIC	SBT-1111
S601151001	115.00	135.00	40.00	10.00	5.00	5.00	NBR	PPA-1966
S601151001	115.00	135.00	40.00	10.00	5.00	5.00	NBR	SBT-2159
S601158361	115.00	140.00	28.00	7.00	3.50	3.50	NBR/FABRIC	SBT-1962
S601158321	115.00	140.00	42.50	10.63	5.31	5.31	NBR/FABRIC	SBT-2157
S601158319	115.00	140.00	46.00	11.50	5.75	5.75	NBR/FABRIC	SBT-1120
S601158315	115.00	140.00	46.00	11.50	5.75	5.75	NBR/FABRIC	SBT-987
S601158316	115.00	140.00	48.50	12.13	6.06	6.06	NBR/FABRIC	SBT-1102
S601158301	115.00	140.00	49.48	12.37	6.19	6.19	NBR/FABRIC	SBT-1879
S601158301	**115.00**	**140.00**	**49.48**	**12.37**	**6.19**	**6.19**	**NBR/FABRIC**	**SBT-194**
S601158313	115.00	145.00	54.00	13.50	6.75	6.75	NBR/FABRIC	SBT-857
S601178302	117.00	138.15	53.00	13.25	6.63	6.63	NBR/FABRIC	SBT-1511
S601178301	117.00	140.00	40.00	10.00	5.00	5.00	NBR/FABRIC	SBT-1411
S601188301	118.00	138.00	40.00	10.00	5.00	5.00	NBR/FABRIC	SBT-3042
S601188503	118.00	140.00	50.00	12.50	6.25	6.25	FKM/FABRIC	SBT-1947
S601198401	119.38	133.85	25.40	6.34	3.17	3.17	NBR	SBT-3166
S601208401	120.00	140.00	30.00	7.50	3.75	3.75	NBR/FABRIC	SBT-2789
S601208324	120.00	140.00	35.00	8.75	4.38	4.38	NBR/FABRIC	SBT-1070
S601208319	120.00	140.00	49.00	12.25	6.13	6.13	FKM/BFT	SBT-1121
S601208321	120.00	140.00	58.00	14.50	7.25	7.25	NBR/FABRIC	SBT-1301
S601208334	120.00	145.00	45.00	11.25	5.63	5.63	NBR/FABRIC	SBT-988
S601208304	**120.00**	**145.00**	**48.50**	**12.13**	**6.06**	**6.06**	**NBR/FABRIC**	**SBT-239**
S601208305	120.00	145.00	54.52	13.63	6.82	6.82	NBR/FABRIC	SBT-308
S601208328	120.00	146.00	56.00	14.00	7.00	7.00	NBR/FABRIC	SBT-1896
S601208309	**120.00**	**150.00**	**51.00**	**12.75**	**6.38**	**6.38**	**NBR/FABRIC**	**SBT-206**
S601208320	120.00	150.00	60.00	15.00	7.50	7.50	NBR/FABRIC	SBT-1251
S601208314	120.50	136.52	31.00	7.74	3.87	3.87	NBR/FABRIC	SBT-901
S601208330	120.65	133.35	25.40	6.34	3.17	3.17	NBR/FABRIC	SBT-2179
S601208339	120.65	133.35	38.35	9.59	4.79	4.79	NBR/FABRIC	SBT-2591
S601208327	120.65	133.35	44.45	11.11	5.56	5.56	NBR/FABRIC	SBT-1889
S601208345	120.65	133.35	50.80	12.70	6.35	6.35	NBR/FABRIC	SBT-2684
S601208335	120.65	136.52	30.98	7.74	3.87	3.87	NBR/FABRIC	SBT-2420
S601208336	120.65	136.52	38.10	9.53	4.76	4.76	NBR/FABRIC	SBT-2404
S601208340	120.65	136.52	38.35	9.59	4.79	4.79	NBR/FABRIC	SBT-2592
S601208313	120.65	146.05	38.55	9.64	4.82	4.82	NBR/FABRIC	SBT-837
S601208306	120.65	146.05	44.45	11.11	5.56	5.56	NBR/FABRIC	SBT-1528
S601208831	120.65	146.05	50.80	12.70	6.35	6.35	NBR/FABRIC	SBT-2180
S601208315	120.65	158.75	50.80	12.70	6.35	6.35	NBR/FABRIC	SBT-968
S601218301	121.44	134.93	35.00	8.75	4.38	4.38	NBR/FABRIC	SBT-1537
S601238302	123.82	146.05	42.67	10.67	5.33	5.33	NBR/FABRIC	SBT-1369
S601238301	123.82	155.57	53.97	13.49	6.75	6.75	NBR/FABRIC	SBT-641

Vee pack height can be adjusted by increasing or reducing the numbers of centre rings (C). This calculation can be done by the height of 'C' shown in the table.

Bold sizes are readily available in stock.

Other materials are available on request.

S60

Single Acting Rod Vee Pack

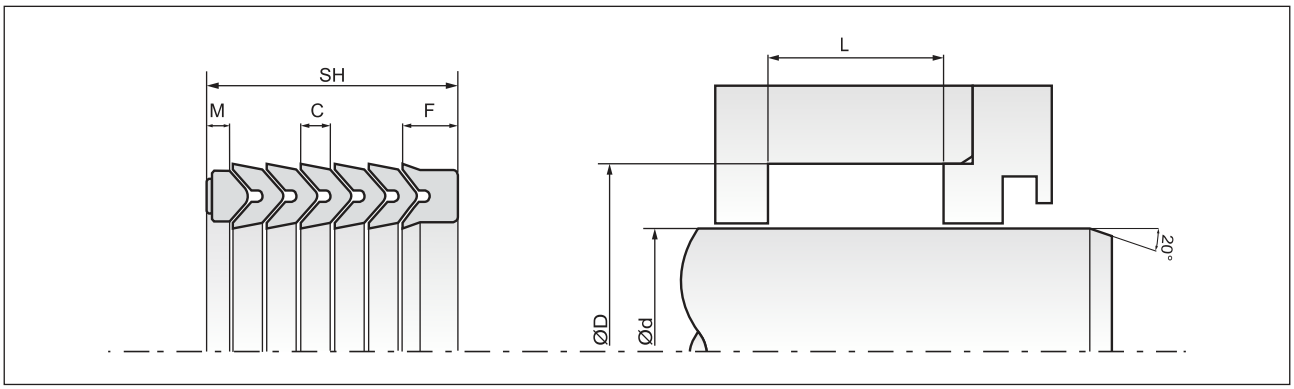

Part No.	d (h9)	D (H9)	SH (Stack Ht.)	F	C	M	Material	Mould No.
S601238401	123.90	155.00	95.00	23.75	11.88	11.88	NBR/FABRIC	SBT-3160
S601258320	125.00	140.00	30.00	7.50	3.75	3.75	NBR/FABRIC	SBT-1250
S601258305	**125.00**	**140.00**	**30.25**	**7.56**	**3.78**	**3.78**	**NBR/FABRIC**	**SBT-361**
S601258502	125.00	140.00	34.00	8.50	4.25	4.25	FKM/FABRIC	SBT-1155
S60125J801	125.00	140.00	35.00	8.75	4.38	4.38	NYLON	PPA-1573
S601258314	125.00	140.00	37.00	9.25	4.63	4.63	NBR/FABRIC	SBT-570
S601258509	125.00	140.00	40.00	10.00	5.00	5.00	FKM/FABRIC	SBT-2062
S601258511	125.00	145.00	36.50	9.13	4.56	4.56	NBR/FABRIC	SBT-2354
S601258302	125.00	145.00	39.48	9.87	4.94	4.94	NBR/FABRIC	SBT-1016
S601258311	**125.00**	**145.00**	**45.00**	**11.25**	**5.63**	**5.63**	**NBR/FABRIC**	**SBT-829**
S601255901	125.00	145.00	60.00	15.00	7.50	7.50	PU	PPA-1104
S601258336	125.00	147.00	35.00	8.75	4.38	4.38	NBR/FABRIC	SBT-2130
S601258303	**125.00**	**150.00**	**36.52**	**9.13**	**4.57**	**4.57**	**NBR/FABRIC**	**SBT-666**
S601258303	125.00	150.00	36.52	9.13	4.57	4.57	NBR/FABRIC	SBT-1885
S601258508	125.00	150.00	46.00	11.50	5.75	5.75	NBR/FABRIC	SBT-263
S601258347	125.00	150.00	46.00	11.50	5.75	5.75	NBR/FABRIC	SBT-2807
S601258348	125.00	150.00	52.00	13.00	6.50	6.50	NBR/FABRIC	SBT-2910
S601258350	125.00	150.00	54.00	13.50	6.75	6.75	FKM/FABRIC	SBT-3005
S601258513	125.00	152.00	40.00	10.00	5.00	5.00	FKM	SBT-2530
S601258402	125.00	152.00	50.00	12.50	6.25	6.25	NBR/FABRIC	SBT-2951
S601258339	125.00	153.00	60.00	15.00	7.50	7.50	NBR/FABRIC	SBT-2237
S601258330	125.50	150.50	48.00	12.00	6.00	6.00	NBR/FABRIC	SBT-1706
S601268301	126.00	152.00	50.00	12.50	6.25	6.25	NBR/FABRIC	SBT-2195
S601278310	127.00	139.70	25.40	6.34	3.17	3.17	NBR/FABRIC	SBT-2181
S60127K101	127.00	139.70	25.40	6.34	3.17	3.17	HYT	PPA-2411
S601272101	127.00	139.70	26.67	6.66	3.33	3.33	CR/FABRIC	SBT-2522
S601272102	127.00	139.70	27.70	6.92	3.46	3.46	CR/FABRIC	SBT-2527
S601275901	127.00	139.70	34.92	8.73	4.37	4.37	PU	PPA-1848
S601278314	127.00	139.70	38.35	9.59	4.79	4.79	NBR/FABRIC	SBT-2593
S601278304	127.00	139.70	40.00	10.00	5.00	5.00	NBR/FABRIC	SBT-1185
S601278313	127.00	142.87	38.10	9.53	4.76	4.76	NBR/FABRIC	SBT-2408
S60127K301	127.00	146.05	31.75	7.92	3.96	3.96	NYLON	PPA-1335
S601278311	127.00	146.05	38.10	9.53	4.76	4.76	NBR/FABRIC	SBT-2425
S601278401	127.00	152.40	25.40	6.34	3.17	3.17	NBR/FABRIC	SBT-2795
S601278316	127.00	152.40	38.35	9.59	4.79	4.79	NBR/FABRIC	SBT-2588
S601278318	127.00	152.40	44.85	11.21	5.61	5.61	NBR/FABRIC	SBT-3124
S601278312	127.00	152.40	49.78	12.45	6.22	6.22	NBR/FABRIC	SBT-2415
S601271001	127.00	152.40	51.49	12.87	6.44	6.44	NBR	SBT-2263
S601278301	**127.00**	**152.40**	**51.49**	**12.87**	**6.44**	**6.44**	**NBR/FABRIC**	**SBT-365**
S601278309	127.00	152.40	60.33	15.08	7.54	7.54	NBR/FABRIC	SBT-1771
S601278317	127.00	152.40	62.71	15.68	7.84	7.84	NBR/FABRIC	SBT-3106
S601270701	127.00	158.75	38.10	9.53	4.76	4.76	NBR/FABRIC	SBT-1820
S601282101	128.57	141.27	27.30	6.80	3.40	3.40	CR	SBT-2475
S601282101	128.57	141.27	27.30	6.80	3.40	3.40	HYT-HYTREL	PPA-2535
S601298302	129.00	157.00	70.00	17.50	8.75	8.75	NBR/FABRIC	SBT-1979
S601298301	129.00	158.00	60.00	15.00	7.50	7.50	NBR/FABRIC	SBT-1851
S601308304	130.00	150.00	40.00	10.00	5.00	5.00	NBR/FABRIC	SBT-1877
S601308310	**130.00**	**150.00**	**40.00**	**10.00**	**5.00**	**5.00**	**NBR/FABRIC**	**SBT-169**
S601308311	130.00	155.00	46.00	11.50	5.75	5.75	NBR/FABRIC	SBT-985
S601308302	**130.00**	**155.00**	**53.32**	**13.33**	**6.67**	**6.67**	**NBR/FABRIC**	**SBT-1320**
S601308302	130.00	155.00	53.32	13.33	6.67	6.67	NBR/FABRIC	SBT-1882
S601308303	**130.00**	**160.00**	**58.00**	**14.50**	**7.25**	**7.25**	**NBR/FABRIC**	**SBT-211**

Vee pack height can be adjusted by increasing or reducing the numbers of centre rings (C). This calculation can be done by the height of 'C' shown in the table.
Bold sizes are readily available in stock.

Other materials are available on request.

S60

Single Acting Rod Vee Pack

MAX SPARE LIMITED
QUALITY. PRECISION. SPEED.

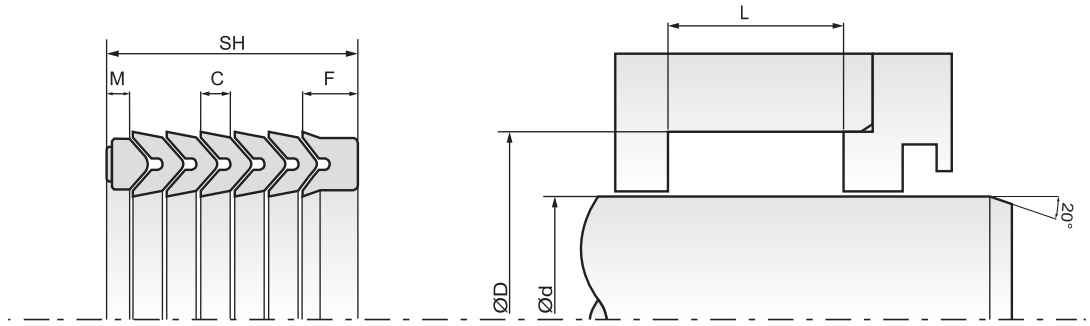

Part No.	d (h9)	D (H9)	SH (Stack Ht.)	F	C	M	Material	Mould No.
S601318301	131.75	149.86	44.45	11.11	5.56	5.56	NBR/FABRIC	SBT-1512
S601328301	132.00	157.00	45.50	11.38	5.69	5.69	NBR/FABRIC	SBT-2314
S601338311	133.00	159.00	80.00	20.00	10.00	10.00	NBR/FABRIC	SBT-1818
S601338312	133.35	146.05	38.10	9.53	4.76	4.76	NBR/FABRIC	SBT-2405
S601338309	133.35	152.40	38.10	9.53	4.76	4.76	NBR/FABRIC	SBT-786
S601338313	133.35	155.57	55.56	13.89	6.95	6.95	NBR/FABRIC	SBT-2426
S601338308	133.35	158.75	40.00	10.00	5.00	5.00	NBR/FABRIC	SBT-1095
S601348301	134.00	153.00	38.00	9.50	4.75	4.75	NBR/FABRIC	SBT-1590
S601358310	135.00	155.00	45.00	11.25	5.63	5.63	NBR/FABRIC	SBT-1417
S601358303	135.00	160.00	45.00	11.25	5.63	5.63	FKM/FABRIC	SBT-836
S601358309	135.00	160.00	55.00	13.75	6.88	6.88	NBR/FABRIC	SBT-1113
S601358307	**135.00**	**160.00**	**56.00**	**14.00**	**7.00**	**7.00**	**NBR/FABRIC**	**SBT-355**
S601368501	136.00	160.00	40.00	10.00	5.00	5.00	FKM/FABRIC	SBT-1112
S601378301	137.80	156.00	44.00	11.00	5.50	5.50	NBR/FABRIC	SBT-1513
S601388301	138.00	180.00	70.00	17.50	8.75	8.75	NBR/FABRIC	SBT-2033
S601398501	139.20	160.00	32.00	8.00	4.00	4.00	FKM/FABRIC	SBT-1772
S601398302	139.70	152.40	25.40	6.34	3.17	3.17	NBR/FABRIC	SBT-1252
S601398304	139.70	152.40	38.10	9.53	4.76	4.76	NBR/FABRIC	SBT-1585
S601398301	139.70	155.57	31.75	7.92	3.96	3.96	NBR/FABRIC	SBT-2326
S601398305	139.70	158.75	38.10	9.53	4.76	4.76	NBR/FABRIC	SBT-2327
S601398601	139.70	158.75	44.45	11.11	5.56	5.56	FKM/FABRIC	SBT-3105
S601398306	139.70	161.92	44.45	11.11	5.56	5.56	NBR/FABRIC	SBT-2323
S601398308	139.70	165.10	38.35	9.59	4.79	4.79	NBR/FABRIC	SBT-2577
S601398503	139.70	165.10	44.45	11.11	5.56	5.56	FKM/FABRIC	SBT-2223
S601398303	139.70	165.10	50.80	12.70	6.35	6.35	NBR/FABRIC	SBT-1254
S601408326	140.00	155.00	30.00	7.50	3.75	3.75	NBR/FABRIC	SBT-1253
S601406801	140.00	155.00	33.00	8.24	4.12	4.12	FKM/FABRIC	SBT-962
S601401201	140.00	155.00	33.00	8.24	4.12	4.12	NBR/FABRIC	SBT-991
S601408305	**140.00**	**155.00**	**34.00**	**8.50**	**4.25**	**4.25**	**NBR/FABRIC**	**SBT-213**
S60140L501	140.00	155.00	50.00	12.50	6.25	6.25	PU	PPA-2834
S601408336	140.00	156.00	32.00	8.00	4.00	4.00	NBR/FABRIC	SBT-1717
S601408341	140.00	158.50	41.00	10.25	5.13	5.13	NBR/FABRIC	SBT-2119
S601408346	140.00	160.00	28.50	7.12	3.56	3.56	NBR	SBT-2342
S601408509	140.00	160.00	34.50	8.63	4.31	4.31	FKM/FABRIC	SBT-1795
S601408349	140.00	160.00	35.00	8.75	4.38	4.38	NBR/FABRIC	SBT-2451
S601408304	**140.00**	**160.00**	**40.00**	**10.00**	**5.00**	**5.00**	**NBR/FABRIC**	**SBT-168**
S601408304	140.00	160.00	40.00	10.00	5.00	5.00	NBR/FABRIC	SBT-1878
S601408401	140.00	160.00	41.00	10.25	5.13	5.13	NBR/FABRIC	SBT-2796
S601405901	140.00	160.00	60.00	15.00	7.50	7.50	PU	PPA-1105
S601408302	140.00	165.00	46.00	11.50	5.75	5.75	NBR/FABRIC	SBT-446
S601408332	140.00	165.00	49.00	12.25	6.13	6.13	NBR/FABRIC	PPA-949
S601408511	140.00	165.00	50.00	12.50	6.25	6.25	FKM/FABRIC	SBT-2017
S601408321	140.00	170.00	28.00	7.00	3.50	3.50	NBR/FABRIC	SBT-838
S601408303	**140.00**	**170.00**	**43.95**	**10.99**	**5.49**	**5.49**	**NBR/FABRIC**	**SBT-292**
S601408323	140.00	170.00	52.40	13.10	6.55	6.55	NBR/FABRIC	SBT-1008
S601408325	140.00	170.00	55.00	13.75	6.88	6.88	NBR/FABRIC	SBT-1237
S601408501	140.00	170.00	80.00	20.00	10.00	10.00	FKM/FABRIC	SBT-1383
S601408343	140.00	170.00	85.00	21.25	10.63	10.63	NBR/FABRIC	SBT-1355
S601408306	140.00	170.00	95.00	23.75	11.88	11.88	NBR/FABRIC	SBT-1533
S601408408	140.70	165.00	52.00	13.00	6.50	6.50	NBR/FABRIC	SBT-3173
S601428301	142.87	169.82	57.15	14.29	7.14	7.14	NBR/FABRIC	SBT-1073
S601438501	143.00	160.00	38.00	9.50	4.75	4.75	FKM/FABRIC	SBT-1740

Vee pack height can be adjusted by increasing or reducing the numbers of centre rings (C). This calculation can be done by the height of 'C' shown in the table.

Bold sizes are readily available in stock.

Other materials are available on request.

S60

Single Acting Rod Vee Pack

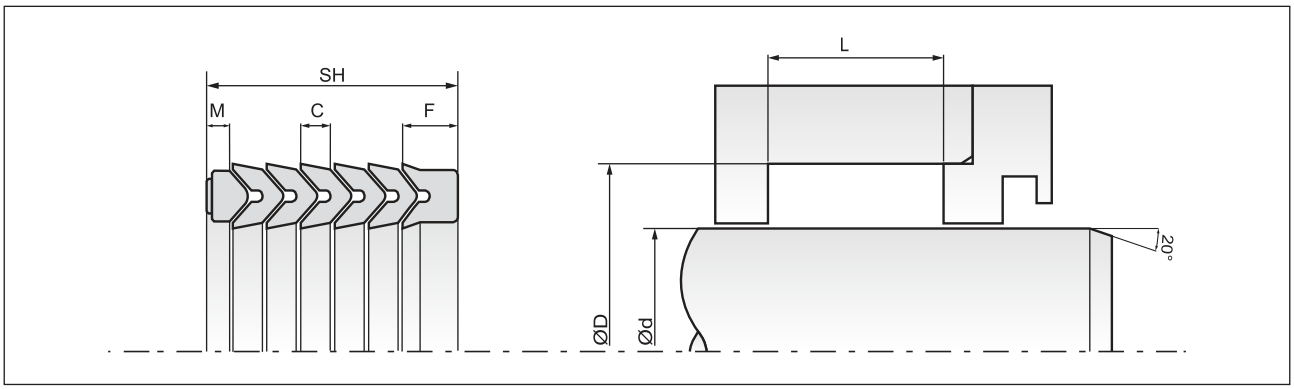

Part No.	d (h9)	D (H9)	SH (Stack Ht.)	F	C	M	Material	Mould No.
S601458308	145.00	160.00	40.00	10.00	5.00	5.00	NBR/FABRIC	SBT-550
S601458301	**145.00**	**170.00**	**50.80**	**12.70**	**6.35**	**6.35**	**NBR/FABRIC**	**SBT-626**
S601458309	145.00	171.00	50.00	12.50	6.25	6.25	NBR/FABRIC	SBT-1472
S601458311	145.00	172.00	40.00	10.00	5.00	5.00	NBR/FABRIC	SBT-2250
S601468307	146.05	158.75	25.40	6.34	3.17	3.17	NBR/FABRIC	SBT-2324
S601468306	146.05	161.92	31.75	7.92	3.96	3.96	NBR/FABRIC	SBT-2182
S60146308	146.05	161.92	35.00	8.75	4.38	4.38	NBR/FABRIC	SBT-2351
S601468503	146.05	165.10	35.05	8.76	4.38	4.38	FKM/FABRIC	SBT-2552
S601468305	146.05	165.10	38.10	9.53	4.76	4.76	NBR/FABRIC	SBT-1586
S601468309	146.05	171.45	40.64	10.16	5.08	5.08	NBR/FABRIC	SBT-2421
S601468601	146.05	171.45	44.45	11.11	5.56	5.56	FKM/FABRIC	SBT-2842
S601468502	146.05	177.80	53.97	13.49	6.75	6.75	FKM/FABRIC	SBT-1177
S601468304	146.05	177.80	69.85	17.46	8.73	8.73	NBR/FABRIC	SBT-1060
S601478301	147.63	160.33	25.40	6.34	3.17	3.17	NBR/FABRIC	SBT-1056
S601488301	148.00	178.00	45.00	11.25	5.63	5.63	NBR/FABRIC	SBT-931
S601488302	148.00	180.00	50.00	12.50	6.25	6.25	NBR/FABRIC	SBT-1895
S601488303	148.60	170.00	50.00	12.50	6.25	6.25	NBR/FABRIC	SBT-2138
S601508324	150.00	168.00	44.00	11.00	5.50	5.50	NBR/FABRIC	SBT-1514
S601508329	150.00	170.00	30.00	7.50	3.75	3.75	FKM/FABRIC	SBT-2238
S60150L501	150.00	170.00	59.50	14.88	7.44	7.44	PU	PPA-1441
S601508307	150.00	175.00	48.50	12.13	6.06	6.06	NBR/FABRIC	SBT-2143
S601508317	150.00	175.00	50.00	12.50	6.25	6.25	NBR/FABRIC	SBT-1256
S601508305	150.00	175.00	60.50	15.13	7.56	7.56	NBR/FABRIC	SBT-307
S601508310	150.00	180.00	45.00	11.25	5.63	5.63	NBR/FABRIC	SBT-986
S601508316	150.00	180.00	54.00	13.50	6.75	6.75	NBR/FABRIC	SBT-1024
S601508402	150.00	180.00	55.60	13.90	6.95	6.95	NBR/FABRIC	SBT-3227
S601508303	**150.00**	**180.00**	**58.00**	**14.50**	**7.25**	**7.25**	**NBR/FABRIC**	**SBT-174**
S601508303Q	150.00	180.00	58.00	14.50	7.25	7.25	NBR/FABRIC	SBT-1874
S601508321	150.00	181.00	60.00	15.00	7.50	7.50	NBR/FABRIC	SBT-1407
S601508309	150.00	185.00	60.00	15.00	7.50	7.50	NBR/FABRIC	SBT-805
S601508301	150.44	178.53	59.00	14.75	7.38	7.38	NBR/FABRIC	SBT-2495
S601518302	151.50	180.00	80.00	20.00	10.00	10.00	NBR/FABRIC	SBT-2031
S601528313	152.40	165.10	25.40	6.34	3.17	3.17	NBR/FABRIC	SBT-2188
S60152K101	152.40	165.10	25.40	6.34	3.17	3.17	HYT	PPA-2356
S601522101	152.40	165.10	26.67	6.66	3.33	3.33	CR/FABRIC	SBT-2523
S601522102	152.40	165.10	27.70	6.92	3.46	3.46	CR/FABRIC	SBT-2528
S601528304	152.40	165.10	32.50	8.12	4.06	4.06	NBR/FABRIC	SBT-841
S601528318	152.40	165.10	38.35	9.59	4.79	4.79	NBR/FABRIC	SBT-2578
S601528309	152.40	165.10	50.80	12.70	6.35	6.35	NBR/FABRIC	SBT-1255
S601528316	152.40	168.27	50.80	12.70	6.35	6.35	NBR/FABRIC	SBT-2413
S601528314	152.40	171.27	45.00	11.25	5.63	5.63	NBR/FABRIC	SBT-2258
S601528317	152.40	171.45	44.95	11.24	5.62	5.62	NBR/FABRIC	SBT-2423
S601528319	152.40	177.80	38.35	9.59	4.79	4.79	NBR/FABRIC	SBT-3172
S601528308	152.40	177.80	40.00	10.00	5.00	5.00	NBR/FABRIC	SBT-942
S601528301	**152.40**	**177.80**	**44.44**	**11.11**	**5.56**	**5.56**	**NBR/FABRIC**	**SBT-284**
S601528310	152.40	177.80	50.80	12.70	6.35	6.35	NBR/FABRIC	SBT-1257
S601558501	155.00	175.00	50.00	12.50	6.25	6.25	FKM/FABRIC	SBT-2020
S601558306	155.00	180.00	33.50	8.38	4.19	4.19	NBR/FABRIC	SBT-1938
S601558308	155.00	180.00	40.00	10.00	5.00	5.00	NBR/FABRIC	SBT-512
S601558502	155.00	180.00	50.00	12.50	6.25	6.25	FKM/FABRIC	SBT-2204
S601588302	158.75	174.62	31.75	7.92	3.96	3.96	NBR/FABRIC	SBT-2325
S601588303	158.75	177.80	31.75	7.92	3.96	3.96	NBR/FABRIC	SBT-2417

Vee pack height can be adjusted by increasing or reducing the numbers of centre rings (C). This calculation can be done by the height of 'C' shown in the table.
Bold sizes are readily available in stock.
Other materials are available on request.

S60

Single Acting Rod Vee Pack

MAX SPARE LIMITED
QUALITY. PRECISION. SPEED.

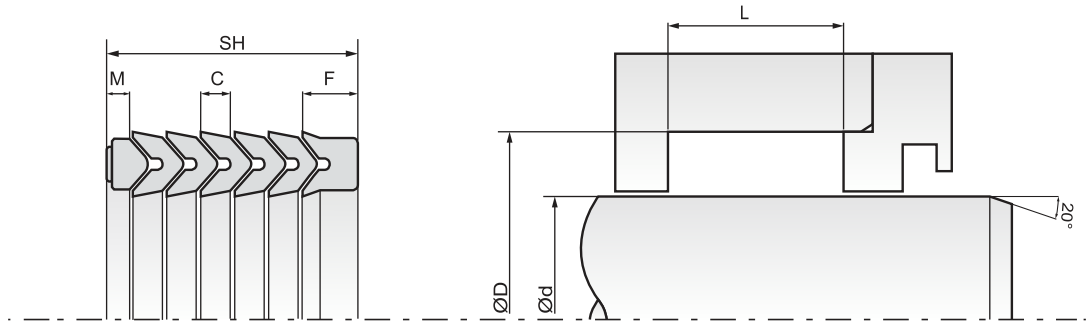

Part No.	d (h9)	D (H9)	SH (Stack Ht.)	F	C	M	Material	Mould No.
S601588301	158.75	190.50	63.50	15.88	7.94	7.94	NBR/FABRIC	SBT-1259
S601598301	159.00	180.00	35.00	8.75	4.38	4.38	NBR/FABRIC	SBT-1354
S601608312	160.00	180.00	39.00	9.75	4.88	4.88	NBR/FABRIC	SBT-810
S601606801	160.00	180.00	39.00	9.75	4.88	4.88	FKM/FABRIC	SBT-820
S601608301	160.00	180.00	40.00	10.00	5.00	5.00	NBR/FABRIC	SBT-1871
S601608301	**160.00**	**180.00**	**40.00**	**10.00**	**5.00**	**5.00**	**NBR/FABRIC**	**SBT-1699**
S601608321	160.00	180.00	40.00	10.00	5.00	5.00	ACT-1	PPA-1261
S601608402	160.00	180.00	40.00	10.00	5.00	5.00	NBR/FABRIC	SBT-3092
S601608507	160.00	180.00	42.70	10.68	5.34	5.34	FKM/FABRIC	SBT-1899
S601608508	160.00	180.60	40.00	10.00	5.00	5.00	FKM/FABRIC	SBT-2395
S601608313	160.00	182.00	35.60	8.90	4.45	4.45	NBR/FABRIC	SBT-1063
S601608325	160.00	185.00	43.50	10.88	5.44	5.44	NBR/FABRIC	SBT-1802
S601608317	160.00	185.00	50.00	12.50	6.25	6.25	NBR/FABRIC	SBT-1258
S601608403	160.00	185.00	53.50	13.38	6.69	6.69	NBR/FABRIC	SBT-3168
S60160J801	160.00	185.00	54.00	13.50	6.75	6.75	NBR/FABRIC	SBT-2800
S601608322	160.00	185.00	80.00	20.00	10.00	10.00	NBR/FABRIC	SBT-1658
S601608504	160.00	186.60	39.00	9.75	4.88	4.88	FKM/FABRIC	SBT-1457
S601608304	160.00	190.00	33.00	8.24	4.12	4.12	NBR/FABRIC	SBT-1839
S601608302	**160.00**	**190.00**	**43.95**	**10.99**	**5.49**	**5.49**	**NBR/FABRIC**	**SBT-254**
S601608501	160.00	190.00	60.00	15.00	7.50	7.50	FKM/FABRIC	SBT-877
S601608505	160.00	190.00	60.00	15.00	7.50	7.50	FKM/FABRIC	SBT-1798
S601608315	160.00	190.00	60.00	15.00	7.50	7.50	NBR/FABRIC	SBT-646
S601608316	160.00	190.00	90.00	22.50	11.25	11.25	NBR/FABRIC	SBT-1046
S601658501	165.00	185.00	50.00	12.50	6.25	6.25	FKM/FABRIC	SBT-1951
S601658308	165.00	195.00	60.00	15.00	7.50	7.50	NBR/FABRIC	SBT-1260
S601658309	165.10	177.80	25.40	6.34	3.17	3.17	NBR/FABRIC	SBT-2049
S601658313	165.10	184.15	38.35	9.59	4.79	4.79	NBR/FABRIC	SBT-2598
S601658311	165.10	184.15	49.78	12.45	6.22	6.22	NBR/FABRIC	SBT-2416
S601658312	165.10	190.50	45.62	11.41	5.70	5.70	NBR/FABRIC	SBT-2537
S601658306	165.10	196.85	63.50	15.88	7.94	7.94	NBR/FABRIC	SBT-1129
S601658307	165.10	196.85	75.41	18.85	9.43	9.43	NBR/FABRIC	SBT-1221
S601708311	170.00	185.00	40.00	10.00	5.00	5.00	NBR/FABRIC	SBT-796
S601708313	170.00	190.00	30.00	7.50	3.75	3.75	NBR/FABRIC	SBT-1114
S601708322	170.00	190.00	41.00	10.25	5.13	5.13	NBR/FABRIC	SBT-3069
S601708315	170.00	195.00	50.00	12.50	6.25	6.25	NBR/FABRIC	SBT-1261
S601708316	170.00	200.00	45.00	11.25	5.63	5.63	NBR/FABRIC	SBT-1373
S601708320	170.00	200.00	49.50	12.38	6.19	6.19	NBR/FABRIC	SBT-1115
S601708319	170.00	200.00	52.50	13.13	6.56	6.56	NBR/FABRIC	SBT-487
S601708303	**170.00**	**200.00**	**65.50**	**16.38**	**8.19**	**8.19**	**NBR/FABRIC**	**SBT-167**
S601706002	170.50	203.20	33.40	8.35	4.18	4.18	NBR/FABRIC	SBT-1957
S601718303	171.45	184.15	26.50	6.62	3.31	3.31	NBR/FABRIC	SBT-1666
S601718305	171.45	184.15	35.00	8.75	4.38	4.38	NBR/FABRIC	SBT-2352
S601718307	171.45	187.32	38.10	9.53	4.76	4.76	NBR/FABRIC	SBT-2409
S601718306	171.45	190.50	31.75	7.92	3.96	3.96	NBR/FABRIC	SBT-2418
S601718309	171.45	196.85	50.80	12.70	6.35	6.35	NBR/FABRIC	SBT-2704
S601718302	**171.45**	**203.20**	**40.00**	**10.00**	**5.00**	**5.00**	**NBR/FABRIC**	**SBT-233**
S601718304	171.45	203.20	50.80	12.70	6.35	6.35	NBR/FABRIC	SBT-2268
S601728301	172.00	192.00	54.00	13.50	6.75	6.75	NBR/FABRIC	SBT-1420
S601738301	173.00	196.00	54.00	13.50	6.75	6.75	NBR/FABRIC	SBT-1421
S601758305	175.00	205.00	60.00	15.00	7.50	7.50	NBR/FABRIC	SBT-1262
S601758303	175.00	205.00	64.00	16.00	8.00	8.00	NBR/FABRIC	SBT-2604
S601758501	175.00	210.00	60.00	15.00	7.50	7.50	FKM/FABRIC	SBT-1408

Vee pack height can be adjusted by increasing or reducing the numbers of centre rings (C). This calculation can be done by the height of 'C' shown in the table.

Bold sizes are readily available in stock.

Other materials are available on request.

S60

Single Acting Rod Vee Pack

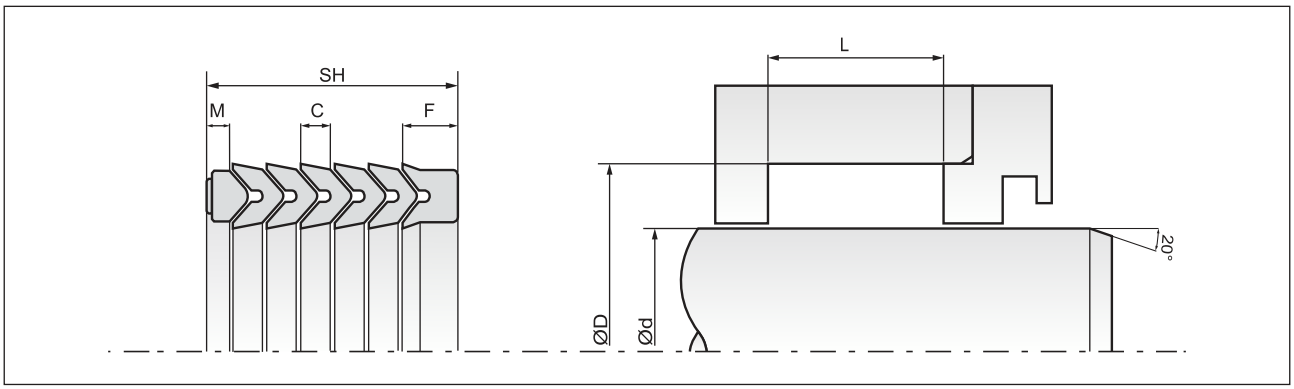

Part No.	d (h9)	D (H9)	SH (Stack Ht.)	F	C	M	Material	Mould No.
S601768301	176.30	190.50	30.10	7.52	3.76	3.76	NBR/FABRIC	SBT-1011
S601778309	177.80	190.50	25.40	6.34	3.17	3.17	NBR/FABRIC	SBT-2183
S60177K101	177.80	190.50	25.40	6.34	3.17	3.17	NYLON	PPA-1977
S601772102	177.80	190.50	26.67	6.66	3.33	3.33	CR/FABRIC	SBT-2521
S601772101	177.80	190.50	27.70	6.92	3.46	3.46	CR/FABRIC	SBT-2517
S601778308	177.80	190.50	44.45	11.11	5.56	5.56	NBR/FABRIC	SBT-1910
S601778311	177.80	196.85	41.14	10.29	5.14	5.14	NBR/FABRIC	SBT-549
S601778501	177.80	203.20	39.21	9.80	4.90	4.90	FKM/FABRIC	SBT-1433
S601778401	177.80	203.20	39.67	9.92	4.96	4.96	NBR/FABRIC	SBT-2793
S601778304	177.80	203.20	49.00	12.25	6.13	6.13	NBR/FABRIC	SBT-1181
S601778310	177.80	203.20	50.80	12.70	6.35	6.35	NBR/FABRIC	SBT-2319
S601778303	177.80	209.55	55.00	13.75	6.88	6.88	NBR/FABRIC	SBT-1081
S601778502	177.80	209.55	58.72	14.68	7.34	7.34	FKM/FABRIC	SBT-2127
S601778313	177.80	209.55	68.07	17.02	8.51	8.51	NBR/FABRIC	SBT-2954
S601778312	177.80	241.30	133.35	33.34	16.67	16.67	NBR/FABRIC	SBT-2547
S601788301	178.00	208.00	60.00	15.00	7.50	7.50	NBR/FABRIC	SBT-1916
S601798301	179.00	200.00	40.00	10.00	5.00	5.00	NBR/FABRIC	SBT-3009
S601808304	**180.00**	**200.00**	**40.00**	**10.00**	**5.00**	**5.00**	**NBR/FABRIC**	**SBT-382**
S601808322	180.00	200.00	40.00	10.00	5.00	5.00	NBR/FABRIC	PPA-1283
S601808318	180.00	205.00	50.00	12.50	6.25	6.25	NBR/FABRIC	SBT-1263
S601808318	180.00	210.00	50.50	12.63	6.31	6.31	NBR/FABRIC	SBT-2056
S601808312	180.00	210.00	59.00	14.75	7.38	7.38	NBR/FABRIC	SBT-777
S601808307	180.00	210.00	60.00	15.00	7.50	7.50	NBR/FABRIC	SBT-1264
S601808503	180.00	210.00	60.00	15.00	7.50	7.50	FKM/FABRIC	SBT-1230
S601808303	**180.00**	**210.00**	**61.00**	**15.25**	**7.63**	**7.63**	**NBR/FABRIC**	**SBT-114**
S601808504	180.00	210.00	61.00	15.25	7.63	7.63	NBR/FABRIC	SBT-1745
S601808326	180.00	210.00	69.00	17.25	8.63	8.63	NBR/FABRIC	SBT-2075
S601808314	180.97	203.20	46.46	11.62	5.81	5.81	NBR/FABRIC	SBT-900
S601848301	184.10	209.10	43.30	10.83	5.41	5.41	NBR/FABRIC	SBT-899
S60184M101	184.15	196.85	44.45	11.11	5.56	5.56	HNBR/FABRIC	SBT-1890
S601848302	184.15	222.25	57.15	14.29	7.14	7.14	NBR/FABRIC	SBT-1178
S601858301	185.00	205.00	40.00	10.00	5.00	5.00	NBR/FABRIC	SBT-898
S601858302	185.00	210.00	35.00	8.75	4.38	4.38	NBR/FABRIC	SBT-897
S601858304	185.00	215.00	58.00	14.50	7.25	7.25	NBR/FABRIC	SBT-237
S601901201	190.00	210.00	40.25	10.06	5.03	5.03	NBR/FABRIC	SBT-3180
S601908330	190.00	215.00	45.50	11.38	5.69	5.69	NBR/FABRIC	SBT-1978
S601908334	190.00	215.00	50.00	12.50	6.25	6.25	NBR/FABRIC	SBT-727
S601908324	190.00	215.00	50.80	12.70	6.35	6.35	NBR/FABRIC	SBT-1629
S601908322	190.00	215.00	70.00	17.50	8.75	8.75	NBR/FABRIC	SBT-2251
S601908302	190.00	220.00	51.00	12.75	6.38	6.38	NBR/FABRIC	SBT-500
S601908316	190.00	220.00	60.00	15.00	7.50	7.50	NBR/FABRIC	SBT-2133
S601908321	190.00	220.00	75.00	18.75	9.38	9.38	NBR/FABRIC	SBT-1412
S601908327	190.00	220.00	100.00	25.00	12.50	12.50	NBR/FABRIC	SBT-1776
S601908331	190.50	203.20	25.40	6.34	3.17	3.17	NBR/FABRIC	SBT-2045
S601908329	190.50	209.55	50.80	12.70	6.35	6.35	NBR/FABRIC	SBT-1892
S601908335	190.50	215.50	50.00	12.50	6.25	6.25	NBR/FABRIC	SBT-2545
S601902101	190.50	215.90	53.59	13.40	6.70	6.70	CR/FABRIC	SBT-2121
S601948301	194.00	225.00	60.00	15.00	7.50	7.50	NBR/FABRIC	SBT-832
S601958401	195.00	220.00	50.00	12.50	6.25	6.25	NBR/FABRIC	SBT-3114
S601958303	195.00	220.00	58.00	14.50	7.25	7.25	NBR/FABRIC	SBT-1680
S601978501	197.00	222.00	45.00	11.25	5.63	5.63	FKM/FABRIC	SBT-1698
S602008304	200.00	212.00	30.00	7.50	3.75	3.75	NBR/FABRIC	SBT-2299

Vee pack height can be adjusted by increasing or reducing the numbers of centre rings (C). This calculation can be done by the height of 'C' shown in the table.
Bold sizes are readily available in stock.

Other materials are available on request.

S60

Single Acting Rod Vee Pack

MAX SPARE LIMITED
QUALITY. PRECISION. SPEED.

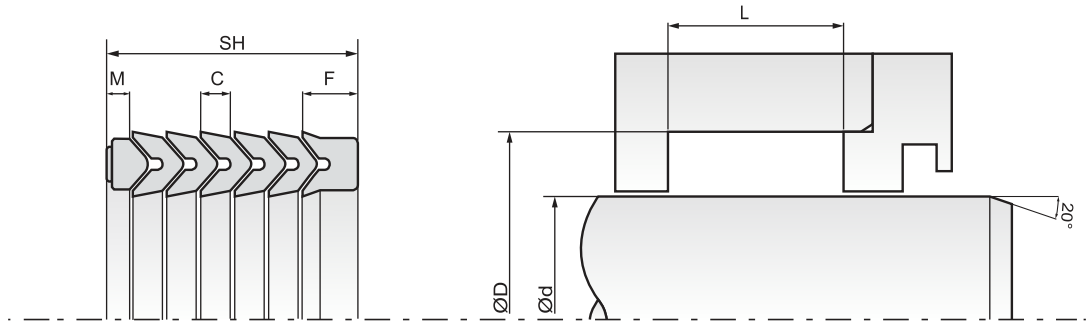

Part No.	d (h9)	D (H9)	SH (Stack Ht.)	F	C	M	Material	Mould No.
S602008301	200.00	220.00	40.00	10.00	5.00	5.00	NBR/FABRIC	SBT-249
S602008321	200.00	224.00	60.00	15.00	7.50	7.50	NBR/FABRIC	SBT-1932
S602008302	200.00	225.00	45.00	11.25	5.63	5.63	NBR/FABRIC	SBT-1672
S602008305	200.00	225.00	48.50	12.13	6.06	6.06	NBR/FABRIC	SBT-2596
S602008325	200.00	225.50	145.00	36.25	18.13	18.13	NBR/FABRIC	SBT-2386
S602008303	**200.00**	**230.00**	**45.00**	**11.25**	**5.63**	**5.63**	**NBR/FABRIC**	**SBT-1872**
S602008504	200.00	230.00	45.00	11.25	5.63	5.63	NBR/FABRIC	SBT-193
S602008309	200.00	230.00	50.00	12.50	6.25	6.25	NBR/FABRIC	SBT-617
S602008508	200.00	230.00	52.50	13.13	6.56	6.56	NBR/FABRIC	SBT-1576
S602008315	200.00	230.00	60.00	15.00	7.50	7.50	NBR/FABRIC	SBT-1265
S602038305	203.00	228.00	50.00	12.50	6.25	6.25	NBR/FABRIC	SBT-1083
S602036501	203.00	229.00	47.00	11.75	5.88	5.88	FKM/FABRIC	SBT-2349
S602031801	203.20	215.90	26.67	6.66	3.33	3.33	CR/FABRIC	SBT-3192
S602032101	203.20	215.90	27.95	6.98	3.49	3.49	CR/FABRIC	SBT-2518
S602038315	203.20	215.90	38.35	9.59	4.79	4.79	NBR/FABRIC	SBT-2589
S602038314	203.20	215.90	50.80	12.70	6.35	6.35	NBR/FABRIC	SBT-2412
S602038312	203.20	228.60	50.80	12.70	6.35	6.35	NBR/FABRIC	SBT-2184
S602038306	203.20	234.95	58.74	14.69	7.34	7.34	NBR/FABRIC	SBT-1318
S602038307	203.20	247.65	73.00	18.25	9.13	9.13	NBR/FABRIC	SBT-1347
S602068301	206.37	219.07	25.40	6.34	3.17	3.17	NBR/FABRIC	SBT-2320
S602098301	209.55	222.55	38.10	9.53	4.76	4.76	NBR/FABRIC	SBT-1588
S60209K101	209.55	228.60	31.75	7.92	3.96	3.96	NYLON	PPA-2215
S602098302	209.55	228.60	38.10	9.53	4.76	4.76	NBR/FABRIC	SBT-2185
S602108315	210.00	230.00	40.00	10.00	5.00	5.00	NBR/FABRIC	SBT-1650
S602108306	210.00	235.00	48.00	12.00	6.00	6.00	NBR/FABRIC	SBT-1365
S602108311	210.00	236.00	48.00	12.00	6.00	6.00	NBR/FABRIC	SBT-1954
S602108301	210.00	237.00	45.00	11.25	5.63	5.63	NBR/FABRIC	SBT-1164
S602108310	210.00	237.00	55.00	13.75	6.88	6.88	NBR/FABRIC	SBT-1744
S602108601	210.00	240.00	42.10	10.53	5.26	5.26	FKM/FABRIC	SBT-3242
S602108307	210.00	240.00	61.00	15.25	7.63	7.63	NBR/FABRIC	SBT-1437
S602108312	210.00	240.00	63.00	15.75	7.88	7.88	NBR/FABRIC	SBT-1632
S602108309	210.00	240.00	63.00	15.75	7.88	7.88	ACT-1	PPA-1333
S602108316	210.00	240.00	65.50	16.38	8.19	8.19	NBR/FABRIC	SBT-2908
S602128301	212.00	236.00	48.00	12.00	6.00	6.00	NBR/FABRIC	SBT-1933
S602128401	212.72	231.77	40.00	10.00	5.00	5.00	NBR/FABRIC	SBT-3218
S602150301	215.00	235.00	43.00	10.75	5.38	5.38	NBR/FABRIC	SBT-2642
S602158307	215.00	245.00	50.00	12.50	6.25	6.25	NBR/FABRIC	SBT-2176
S602158305	215.00	245.00	60.00	15.00	7.50	7.50	NBR/FABRIC	SBT-1017
S602158310	215.90	228.60	25.40	6.34	3.17	3.17	NBR/FABRIC	SBT-2046
S602158313	215.90	228.60	38.35	9.59	4.79	4.79	NBR/FABRIC	SBT-2583
S60215L501	215.90	228.60	41.27	10.32	5.16	5.16	PU	PPA-1375
S60215L501	215.90	228.60	41.27	10.32	5.16	5.16	PU	PPA-1292
S602158312	215.90	234.95	49.78	12.45	6.22	6.22	NBR/FABRIC	SBT-2414
S602158308	215.90	241.30	47.62	11.91	5.95	5.95	NBR/FABRIC	SBT-1669
S602158311	215.90	241.30	50.80	12.70	6.35	6.35	NBR/FABRIC	SBT-2187
S602158502	215.90	247.65	57.15	14.29	7.14	7.14	FKM/FABRIC	SBT-2125
S602158504	215.90	247.65	58.73	14.68	7.34	7.34	FKM/FABRIC	SBT-2990
S602158501	215.90	247.65	60.32	15.08	7.54	7.54	FKM/FABRIC	SBT-1842
S602158309	215.90	260.35	73.00	18.25	9.13	9.13	NBR/FABRIC	SBT-1841
S602208601	220.00	250.00	49.20	12.30	6.15	6.15	FKM/FABRIC	SBT-1612
S602206003	220.00	250.00	50.00	12.50	6.25	6.25	CPU	CPU-144
S602208504	220.00	250.00	50.00	12.50	6.25	6.25	FKM/FABRIC	SBT-1799

Vee pack height can be adjusted by increasing or reducing the numbers of centre rings (C). This calculation can be done by the height of 'C' shown in the table.

Bold sizes are readily available in stock.

Other materials are available on request.

S60

Single Acting Rod Vee Pack

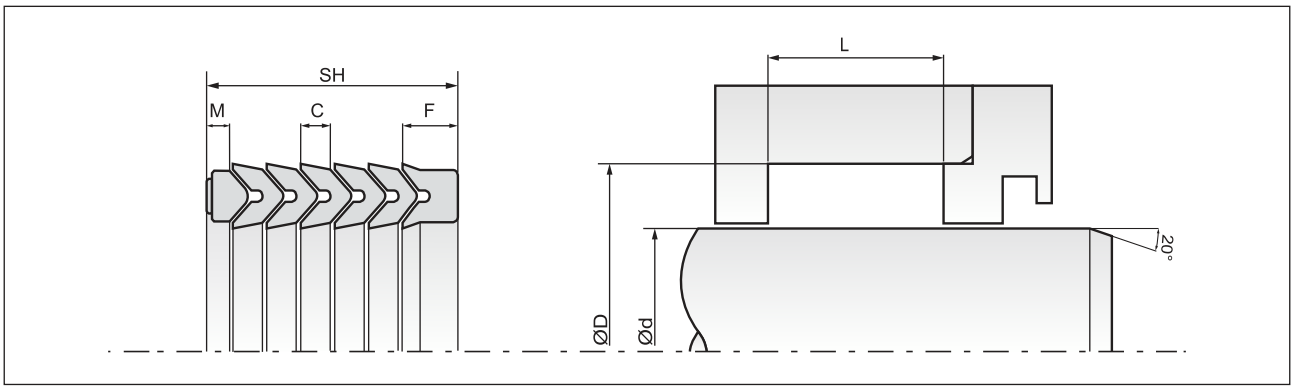

Part No.	d (h9)	D (H9)	SH (Stack Ht.)	F	C	M	Material	Mould No.
S602208509	220.00	250.00	60.00	15.00	7.50	7.50	NBR/FABRIC	SBT-1266
S602208502	220.00	250.00	62.00	15.50	7.75	7.75	FKM	SBT-2294
S602208507	220.00	250.00	62.00	15.50	7.75	7.75	FKM/FABRIC	SBT-2230
S602208506	220.00	250.00	64.50	16.13	8.06	8.06	NBR/FABRIC	SBT-2025
S602208401	220.00	250.00	66.00	16.50	8.25	8.25	NBR/FABRIC	SBT-2901
S602208308	220.00	255.00	60.00	15.00	7.50	7.50	NBR/FABRIC	SBT-1012
S602208311	220.00	265.00	56.00	14.00	7.00	7.00	NBR/FABRIC	SBT-1381
S602208508	220.00	270.00	90.00	22.50	11.25	11.25	FKM/FABRIC	SBT-2265
S602228301	222.25	241.30	38.10	9.53	4.76	4.76	NBR/FABRIC	SBT-1626
S602228501	222.25	254.00	54.10	13.53	6.76	6.76	FKM/FABRIC	SBT-2553
S602238501	223.00	243.00	50.00	12.50	6.25	6.25	FKM/FABRIC	SBT-2061
S602258311	225.00	250.00	40.00	10.00	5.00	5.00	NBR/FABRIC	SBT-3188
S602258304	225.00	255.00	52.40	13.10	6.55	6.55	NBR/FABRIC	SBT-1013
S602258310	225.00	255.00	60.00	15.00	7.50	7.50	NBR/FABRIC	SBT-3007
S602258309	225.00	260.00	60.00	15.00	7.50	7.50	NBR/FABRIC	SBT-2734
S602288307	228.60	241.30	38.35	9.59	4.79	4.79	NBR	SBT-2582
S602288306	228.60	241.30	50.80	12.70	6.35	6.35	NBR/FABRIC	SBT-2411
S602288304	228.60	254.00	47.62	11.91	5.95	5.95	NBR/FABRIC	SBT-1670
S602288301	228.60	254.00	50.80	12.70	6.35	6.35	NBR/FABRIC	SBT-954
S602288309	228.60	260.00	63.50	15.88	7.94	7.94	NBR/FABRIC	SBT-2799
S602288303	228.60	260.35	50.80	12.70	6.35	6.35	NBR/FABRIC	SBT-1644
S602298301	229.99	259.99	64.77	16.19	8.10	8.10	NBR/FABRIC	SBT-2485
S602308313	230.00	250.00	40.00	10.00	5.00	5.00	NBR/FABRIC	SBT-2307
S602308305	230.00	260.00	52.40	13.10	6.55	6.55	NBR/FABRIC	SBT-1015
S602308304	230.00	260.00	60.00	15.00	7.50	7.50	NBR/FABRIC	SBT-488
S602348401	234.95	273.05	62.99	15.75	7.87	7.87	NBR/FABRIC	SBT-3222
S602358501	235.00	265.00	60.00	15.00	7.50	7.50	NBR/FABRIC	SBT-1948
S602368501	236.00	256.00	50.00	12.50	6.25	6.25	NBR/FABRIC	SBT-2022
S602401201	240.00	261.00	45.00	11.25	5.63	5.63	NBR/FABRIC	SBT-1773
S602418301	241.30	254.00	25.40	6.34	3.17	3.17	NBR/FABRIC	SBT-2186
S602458501	245.00	275.00	60.00	15.00	7.50	7.50	NBR/FABRIC	SBT-1949
S60247K101	247.65	266.70	31.75	7.92	3.96	3.96	NY+HYT	PPA-1882
S602488301	248.44	273.84	55.56	13.89	6.95	6.95	NBR/FABRIC	SBT-2269
S602508320	250.00	275.00	41.50	10.38	5.19	5.19	NBR/FABRIC	SBT-2356
S602508311	250.00	275.00	50.00	12.50	6.25	6.25	NBR/FABRIC	SBT-1267
S602508302	250.00	280.00	43.95	10.99	5.49	5.49	NBR/FABRIC	SBT-1846
S602508316	250.00	280.00	46.00	11.50	5.75	5.75	NBR/FABRIC	SBT-1731
S602508504	250.00	280.00	50.00	12.50	6.25	6.25	FKM/FABRIC	SBT-1972
S602508503	250.00	280.00	54.00	13.50	6.75	6.75	FKM/FABRIC	SBT-1959
S602508303	**250.00**	**280.00**	**80.50**	**20.13**	**10.06**	**10.06**	**NBR/FABRIC**	**SBT-124**
S602508315	250.00	285.00	50.00	12.50	6.25	6.25	NBR/FABRIC	SBT-1694
S602508312	250.00	290.00	100.00	25.00	12.50	12.50	NBR/FABRIC	SBT-1350
S602508403	250.82	269.87	40.00	10.00	5.00	5.00	NBR/FABRIC	SBT-3219
S602548501	254.00	279.40	41.27	10.32	5.16	5.16	FKM/FABRIC	SBT-2222
S602548301	254.00	279.40	47.62	11.91	5.95	5.95	NBR/FABRIC	SBT-1667
S602558501	255.00	275.00	50.00	12.50	6.25	6.25	FKM/FABRIC	SBT-1950
S602568501	256.00	276.00	50.00	12.50	6.25	6.25	FKM/FABRIC	SBT-2018
S602608309	260.00	290.00	60.00	15.00	7.50	7.50	NBR/FABRIC	SBT-1192
S602608301	260.35	279.40	38.10	9.53	4.76	4.76	NBR/FABRIC	SBT-1627
S602658302	265.00	285.00	40.00	10.00	5.00	5.00	NBR/FABRIC	SBT-1268
S602658303	265.00	295.00	60.00	15.00	7.50	7.50	NBR/FABRIC	SBT-2393
S60270K101	270.00	300.00	55.00	13.75	6.88	6.88	NYLON	PPA-3016

Vee pack height can be adjusted by increasing or reducing the numbers of centre rings (C). This calculation can be done by the height of 'C' shown in the table.
Bold sizes are readily available in stock.

Other materials are available on request.

S60

Single Acting Rod Vee Pack

MAX SPARE LIMITED
QUALITY. PRECISION. SPEED.

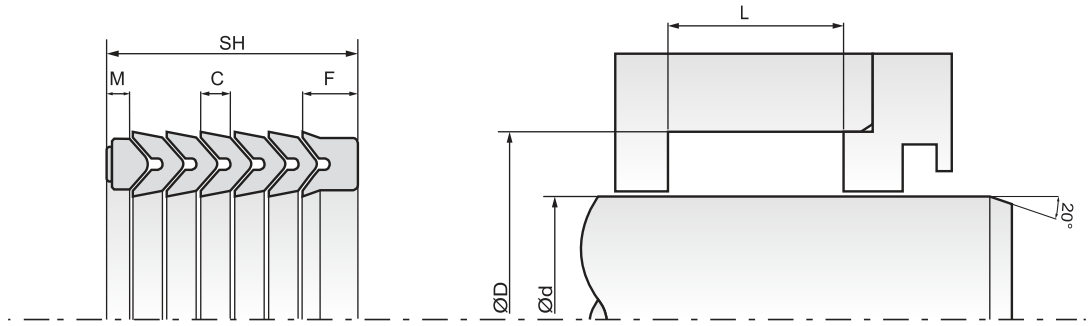

Part No.	d (h9)	D (H9)	SH (Stack Ht.)	F	C	M	Material	Mould No.
S602708401	270.00	300.00	55.00	13.75	6.88	6.88	NBR/FABRIC	SBT-2777
S602708501	270.00	300.00	56.00	14.00	7.00	7.00	FKM/FABRIC	SBT-1501
S602728301	272.40	297.80	49.00	12.25	6.13	6.13	NBR/FABRIC	SBT-1783
S602738301	273.05	285.75	44.45	11.11	5.56	5.56	NBR/FABRIC	SBT-1864
S602748501	274.80	310.00	60.00	15.00	7.50	7.50	FKM/FABRIC	SCT-950
S602798501	279.40	304.80	41.27	10.32	5.16	5.16	FKM/FABRIC	SCT-927
S602798302	279.40	304.80	50.80	12.70	6.35	6.35	NBR/FABRIC	SCT-440
S602808305	280.00	320.00	80.00	20.00	10.00	10.00	NBR/FABRIC	SCT-476
S602858501	285.75	304.80	34.92	8.73	4.37	4.37	FKM/FABRIC	SCT-709
S602888401	288.92	307.97	40.00	10.00	5.00	5.00	NBR/FABRIC	SCT-1210
S602888304	288.92	314.32	53.97	13.49	6.75	6.75	NBR/FABRIC	SCT-510
S602898301	289.00	320.00	75.00	18.75	9.38	9.38	NBR/FABRIC	SCT-793
S602908501	290.00	320.00	41.00	10.25	5.13	5.13	FKM/FABRIC	SCT-930
S602908401	290.00	330.00	50.00	12.50	6.25	6.25	NBR/FABRIC	SCT-1092
S602948302	294.50	320.00	63.50	15.88	7.94	7.94	NBR/FABRIC	SCT-556
S602988303	298.00	330.00	60.00	15.00	7.50	7.50	NBR/FABRIC	SCT-720
S603008301	300.00	320.00	42.66	10.67	5.33	5.33	NBR/FABRIC	SCT-753
S603008302	300.00	325.00	38.00	9.50	4.75	4.75	NBR/FABRIC	SCT-611
S603008307	300.00	330.00	60.00	15.00	7.50	7.50	NBR/FABRIC	SCT-462
S603008310	300.00	360.00	235.00	55.00	37.43	67.43	NBR/FABRIC	SCT-721
S603042101	304.80	330.20	44.45	11.11	5.56	5.56	CR/FABRIC	SCT-660
S603048301	304.80	330.20	47.62	11.91	5.95	5.95	NBR/FABRIC	SCT-980
S603048302	304.80	330.20	50.80	12.70	6.35	6.35	NBR/FABRIC	SCT-664
S603048304	304.80	336.55	63.50	15.88	7.94	7.94	NBR/FABRIC	SCT-499
S603048307	304.97	334.97	46.78	11.70	5.85	5.85	NBR/FABRIC	SCT-865
S603058301	305.00	330.00	40.00	10.00	5.00	5.00	NBR/FABRIC	SCT-1113
S603058501	305.00	335.00	60.00	15.00	7.50	7.50	FKM/FABRIC	SCT-806
S603068501	306.00	326.00	60.00	15.00	7.50	7.50	FKM/FABRIC	SCT-807
S603108304	310.00	330.00	34.20	8.55	4.28	4.28	NBR/FABRIC	SCT-424
S60310K201	310.00	340.00	50.00	12.50	6.25	6.25	NBR	SCT-129
S603158303	315.00	345.00	60.00	15.00	7.50	7.50	NBR/FABRIC	SCT-729
S603158304	315.00	347.00	54.00	13.50	6.75	6.75	NBR/FABRIC	SCT-1157
S603168301	316.00	349.00	50.00	12.50	6.25	6.25	NBR/FABRIC	SCT-1205
S603168401	316.50	365.00	210.00	52.50	26.25	26.25	NBR/FABRIC	SCT-1137
S603178602	317.50	349.25	58.73	14.68	7.34	7.34	FKM/FABRIC	SCT-977
S603188501	318.00	348.00	60.00	15.00	7.50	7.50	FKM/FABRIC	SCT-830
S603188301	318.00	358.00	100.00	25.00	12.50	12.50	NBR/FABRIC	SCT-507
S603198301	319.00	350.00	80.00	20.00	10.00	10.00	NBR/FABRIC	SCT-392
S603208311	320.00	350.00	60.00	15.00	7.50	7.50	NBR/FABRIC	SCT-459
S603208321	320.00	360.00	78.00	19.50	9.75	9.75	NBR/FABRIC	SCT-1151
S603208310	320.00	360.00	80.00	20.00	10.00	10.00	NBR/FABRIC	SCT-454
S603208314	320.00	365.00	75.00	18.75	9.38	9.38	NBR/FABRIC	SCT-488
S603228501	322.00	352.00	60.00	15.00	7.50	7.50	FKM/FABRIC	SCT-831
S603268501	326.00	346.00	60.00	15.00	7.50	7.50	FKM/FABRIC	SCT-805
S603278301	327.81	353.21	55.56	13.89	6.95	6.95	NBR/FABRIC	SCT-1066
S603308401	330.20	355.60	36.51	9.13	4.56	4.56	NBR/FABRIC	SCT-1181
S603318301	331.50	374.65	70.00	17.50	8.75	8.75	NBR/FABRIC	SCT-422
S603348301	334.65	359.79	49.53	12.38	6.19	6.19	NBR/FABRIC	SCT-1167
S603348301	334.65	359.79	49.53	12.38	6.19	6.19	NYLON	PPA-3303
S603358301	335.00	367.00	54.00	13.50	6.75	6.75	NBR/FABRIC	SCT-1111
S603408301	340.00	370.00	58.00	14.50	7.25	7.25	NBR/FABRIC	SCT-936
S603428401	342.90	361.95	40.00	10.00	5.00	5.00	NBR/FABRIC	SCT-1209

Vee pack height can be adjusted by increasing or reducing the numbers of centre rings (C). This calculation can be done by the height of 'C' shown in the table.

Bold sizes are readily available in stock.

Other materials are available on request.

S60

Single Acting Rod Vee Pack

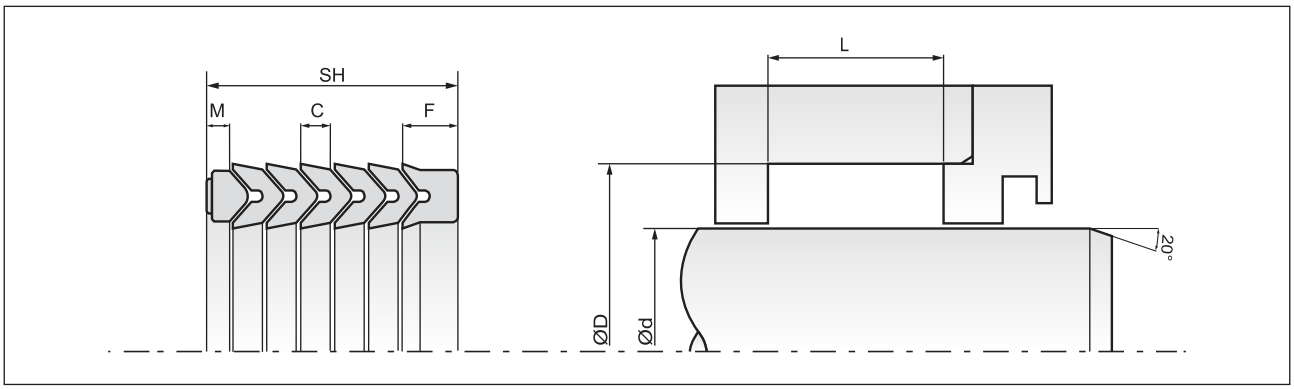

Part No.	d (h9)	D (H9)	SH (Stack Ht.)	F	C	M	Material	Mould No.
S603508306	350.00	380.00	52.40	13.10	6.55	6.55	NBR/FABRIC	SCT-423
S603508313	350.00	395.00	85.00	21.25	10.63	10.63	NBR/FABRIC	SCT-1030
S603508310	353.00	392.00	85.00	21.25	10.63	10.63	NBR/FABRIC	SCT-848
S603538302	353.82	387.35	61.11	15.28	7.64	7.64	NBR/FABRIC	SCT-1027
S603552101	355.60	381.00	47.62	11.91	5.95	5.95	CR/FABRIC	SCT-618
S603558401	355.60	393.70	69.85	17.46	8.73	8.73	NBR	SCT-360
S603608301	360.00	400.00	58.00	14.50	7.25	7.25	NBR/FABRIC	SCT-645
S603608304	360.00	404.50	50.00	12.50	6.25	6.25	NBR/FABRIC	SCT-505
S603658301	365.00	405.00	70.00	17.50	8.75	8.75	NBR/FABRIC	SCT-495
S603688301	368.30	400.05	88.90	22.23	11.11	11.11	NBR/FABRIC	SCT-791
S603758301	375.00	407.00	64.00	16.00	8.00	8.00	NBR/FABRIC	SCT-544
S603808304	380.00	412.00	65.00	16.25	8.13	8.13	NBR/FABRIC	SCT-605
S603908302	390.00	420.00	60.00	15.00	7.50	7.50	NBR/FABRIC	SCT-612
S603908305	390.00	430.00	70.00	17.50	8.75	8.75	NBR/FABRIC	SCT-1044
S604008310	400.00	432.00	60.00	15.00	7.50	7.50	NBR/FABRIC	SCT-746
S604008314	400.00	440.00	54.00	13.50	6.75	6.75	NBR/FABRIC	SCT-123
S604008304	400.00	440.00	63.00	15.75	7.88	7.88	NBR/FABRIC	SCT-518
S604008302	400.00	440.00	70.50	17.63	8.81	8.81	NBR/FABRIC	SCT-245
S604008317	400.00	440.00	145.00	36.25	18.13	18.13	NBR/FABRIC	SCT-1015
S604008313	400.00	450.00	85.00	21.25	10.63	10.63	NBR/FABRIC	SCT-836
S604058402	405.00	445.00	86.00	21.50	10.75	10.75	NBR/FABRIC	SCT-1200
S604058401	405.00	448.00	90.00	22.50	11.25	11.25	NBR/FABRIC	SCT-1149
S604068302	406.40	457.20	66.67	16.67	8.33	8.33	NBR/FABRIC	SCT-426
S604108303	410.00	450.00	79.00	19.75	9.88	9.88	NBR/FABRIC	SCT-217
S604198301	419.10	444.50	85.72	21.43	10.72	10.72	NBR/FABRIC	SCT-654
S604208304	420.00	460.00	78.00	19.50	9.75	9.75	NBR/FABRIC	SCT-108
S604228301	422.00	450.00	56.00	14.00	7.00	7.00	NBR/FABRIC	SCT-1144
S604258301	425.00	475.00	100.00	25.00	12.50	12.50	NBR/FABRIC	SCT-545
S604308303	430.00	460.00	60.00	15.00	7.50	7.50	NBR/FABRIC	SCT-1145
S604318301	431.80	469.90	50.80	12.70	6.35	6.35	NBR/FABRIC	SCT-696
S604388301	438.15	469.90	63.50	15.88	7.94	7.94	NBR/FABRIC	SCT-918
S604448302	444.50	476.25	85.72	21.43	10.72	10.72	NBR/FABRIC	SCT-1006
S604448501	444.50	490.00	72.00	18.00	9.00	9.00	FKM/FABRIC	SCT-635
S604499063	449.00	490.00	63.00	15.75	7.88	7.88	NBR/FABRIC	SCT-843
S604558401	455.00	495.00	48.00	12.00	6.00	6.00	NBR/FABRIC	SCT-1135
S604608303	460.00	490.00	60.00	15.00	7.50	7.50	NBR/FABRIC	SCT-447
S604608306	460.00	490.00	120.00	30.00	15.00	15.00	NBR/FABRIC	SCT-616
S604758301	475.00	527.00	88.99	22.25	11.12	11.12	NBR/FABRIC	SCT-699
S604958301	495.00	535.00	68.00	17.00	8.50	8.50	NBR/FABRIC	SCT-759
S604958302	495.30	546.10	101.60	25.40	12.70	12.70	NBR/FABRIC	SCT-1133
S605008501	500.00	540.00	75.00	18.75	9.38	9.38	FKM/FABRIC	SCT-963
S605008306	500.00	540.00	93.00	23.25	11.63	11.63	NBR/FABRIC	SCT-885
S605038401	503.00	550.00	92.00	23.00	11.50	11.50	NBR/FABRIC	SCT-1196
S605078301	507.00	550.00	84.00	21.00	10.50	10.50	NBR/FABRIC	SCT-867
S605078302	507.00	560.00	90.00	22.50	11.25	11.25	NBR/FABRIC	SCT-999
S605088401	508.00	558.80	80.16	20.04	10.02	10.02	NBR/FABRIC	SCT-1202
S605108301	510.00	550.00	90.00	22.50	11.25	11.25	NBR/FABRIC	SCT-952
S605208304	520.70	558.80	79.38	19.85	9.92	9.92	NBR/FABRIC	SCT-786
S605308301	530.00	570.00	80.00	20.00	10.00	10.00	NBR/FABRIC	SCT-450
S605508401	550.00	590.00	70.00	17.50	8.75	8.75	NBR/FABRIC	SCT-1107
S605583303	558.50	597.00	80.00	20.00	10.00	10.00	NBR/FABRIC	SCT-1049
S605608301	560.00	600.00	60.00	15.00	7.50	7.50	NBR/FABRIC	SCT-138

Vee pack height can be adjusted by increasing or reducing the numbers of centre rings (C). This calculation can be done by the height of 'C' shown in the table.
Bold sizes are readily available in stock.

Other materials are available on request.

S60

Single Acting Rod Vee Pack

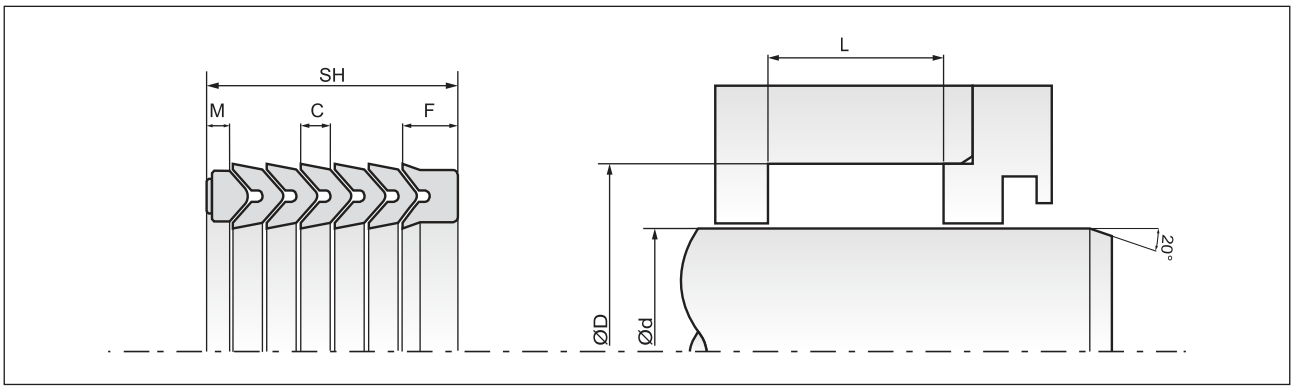

Part No.	d (h9)	D (H9)	SH (Stack Ht.)	F	C	M	Material	Mould No.
S605608401	560.00	610.00	75.00	18.75	9.38	9.38	NBR/FABRIC	SCT-1213
S605808304	580.00	620.00	79.00	19.75	9.88	9.88	NBR/FABRIC	SCT-320
S606008303	600.00	650.00	100.00	25.00	12.50	12.50	NBR/FABRIC	SCT-902
S606318301	631.57	673.10	69.85	17.46	8.73	8.73	NBR/FABRIC	SCT-801
S606508304	650.00	690.00	80.00	20.00	10.00	10.00	NBR/FABRIC	SCT-592
S606708301	670.00	704.00	82.00	20.50	10.25	10.25	NBR/FABRIC	SCT-490
S607158301	715.00	755.00	80.00	20.00	10.00	10.00	NBR/FABRIC	SCT-538
S607238301	723.90	762.00	63.50	15.88	7.94	7.94	NBR/FABRIC	SCT-869
S607298301	729.00	770.00	89.00	22.25	11.13	11.13	NBR/FABRIC	SCT-393
S607408301	740.00	780.00	99.00	24.75	12.38	12.38	NBR/FABRIC	SCT-285
S607508301	750.00	790.00	63.00	15.75	7.88	7.88	NBR/FABRIC	SCT-452
S607601201	760.00	820.00	80.00	20.00	10.00	10.00	NBR/FABRIC	SCT-706
S607628301	762.00	806.45	80.55	20.14	10.07	10.07	NBR/FABRIC	SCT-503
S607748302	774.70	825.50	106.50	26.63	13.31	13.31	NBR/FABRIC	SCT-444
S608308301	830.00	880.00	75.00	18.75	9.38	9.38	NBR/FABRIC	SCT-624
S608708301	870.00	920.00	87.50	21.88	10.94	10.94	NBR/FABRIC	SCT-665
S609308301	930.00	980.00	100.00	25.00	12.50	12.50	NBR/FABRIC	SCT-1141
S609998305	1030.00	1080.00	100.00	25.00	12.50	12.50	NBR/FABRIC	SCT-631
S609998302	1049.00	1100.00	105.00	26.25	13.13	13.13	NBR/FABRIC	SCT-467
S609998306	1100.07	1150.87	85.78	21.45	10.72	10.72	NBR/FABRIC	SCT-702
S609998304	1140.00	1202.00	200.00	50.00	25.00	25.00	NBR/FABRIC	SCT-581
S609998303	1200.00	1250.00	100.00	25.00	12.50	12.50	NBR/FABRIC	SCT-553

Vee pack height can be adjusted by increasing or reducing the numbers of centre rings (C). This calculation can be done by the height of 'C' shown in the table.

Bold sizes are readily available in stock.

Other materials are available on request.

SYMMETRICAL SEALS

MAX SPARE LIMITED
QUALITY. PRECISION. SPEED.

MAX TYPE	PRODUCT NAME	SEAL PROFILE	APPLICATION	PRESSURE (max) bar	TEMPERATURE	SPEED m/s	PAGE NO
E07	U SEAL		SINGLE ACTING	400	-30°C TO +100°C	1.0	233
E20	U SEAL		SINGLE ACTING	400	-30°C TO +100°C	0.5	279
E08	U SEAL		SINGLE ACTING	450	-30°C TO +100°C	1.0	287
E09	U SEAL		SINGLE ACTING	450	-30°C TO +100°C	1.0	291
E10	U SEAL		SINGLE ACTING	450	-30°C TO +100°C	1.0	295
E15	U SEAL		SINGLE ACTING	450	-30°C TO +100°C	1.0	311
E19	FLUID SEAL		SINGLE ACTING	500	-30°C TO +100°C	0.5	315
E25	FLUID SEAL		SINGLE ACTING	250	-30°C TO +100°C	0.5	319
E16	FLUID SEAL		SINGLE ACTING	250	-30°C TO +100°C	0.5	323
E26	FLUID SEAL		SINGLE ACTING	250	-30°C TO +100°C	1.0	331
E17	FLUID SEAL		SINGLE ACTING	250	-30°C TO +100°C	0.5	335
E18	FLUID SEAL		SINGLE ACTING	250	-30°C TO +100°C	0.5	339

E07

Single Acting Symmetrical Seal

DETAILS

E07 seal is a general-purpose seal designed to have symmetrical lips introduces to used for both piston and rod seal application. This seal is suited for split piston but can also be used with a single piston. The E07 seal is available in 2 varieties of materials: i.e. NBR and polyurethane. Considering the economic factor with our seal performance, the E07 seals made out of NBR are most suitable up to a pressure of 150 BAR and extremely economical. Also, another good factor is the preload pressure applied by the seal ensures good sealing at low pressures & also misalignment in the movement of the Piston Rod. Due to excellent wear resistance properties of polyurethane the life expected is 3 times that of NBR.

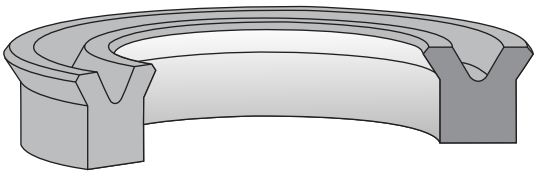

COMPATIBILITY

Mineral oils, bio oils, water soluble & water glycol fluids.

MATERIAL

Polyurethane 92 Shore A
Nitrile Rubber 85/90 Shore A

APPLICATION

- Light to medium duty hydraulic cylinders.
- Also suitable for double acting cylinders.
- Can also be used as a rod seal in conjunction with S15 style rod seal for heavy duty application.

OPERATING CONDITIONS

Temperature Range	:	-30°C to + 100°C
Pressure	:	PU - 400 Bar
		NBR - 150 Bar
Speed	:	PU - 1.0 m/s
		NBR - 0.5 m/s

FEATURES

- Good overall performance.
- Preload squeeze ensures good sealing.
- Good temperature resistance.
- Static & dynamic sealing effect.
- Any size up to 1500 mm dia. available on request.
- Can also be used as a Rod Seal.

SURFACE ROUGHNESS

Static : 1.6 µmRa
Dynamic : 0.4 µmRa

INSTALLATION & ASSEMBLY

E07 u seals are easily assembled into closed groove. Carefull fitting is a prerequisite for the correct functioning of the seal. Kindly refer to page no.26 for installation procedures.

PERMISSIBLE EXTRUSION GAP

PU	E Max (mm)
150 Bar	0.40
250 Bar	0.30
400 Bar	0.20

NBR	E Max (mm)
50 Bar	0.30
100 Bar	0.20
150 Bar	0.15

E07

Single Acting Symmetrical Seal

MAX SPARE LIMITED
QUALITY. PRECISION. SPEED.

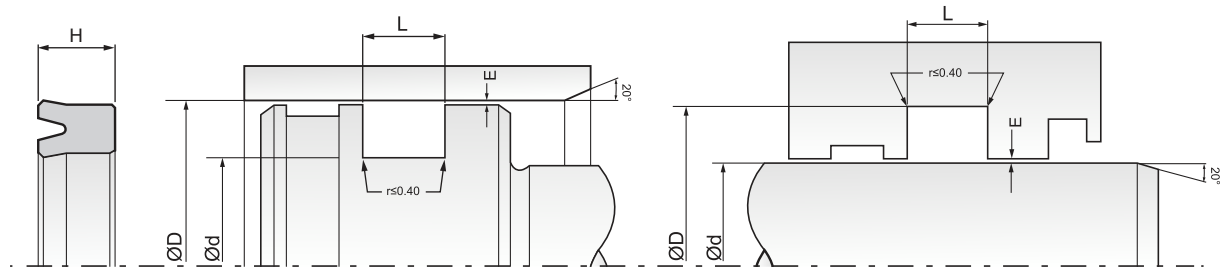

Part No.	D (H10)	d (f8/h9)	L (+0.2)	H	Material	Mould No.
E070021102	6.00	2.50	4.00	3.00	NBR	SUA-1237
E070031001	6.35	3.17	2.59	1.59	NBR	SUA-1171
E070021101	7.00	2.00	4.00	3.00	NBR	SUA-1184
E070031101	7.00	3.00	4.00	3.00	NBR	SUA-1186
E07003L504	7.00	3.00	4.80	3.80	PU	PUA-361
E070038901	7.00	3.00	5.50	4.50	PU	PUA-644
E070036601	7.00	3.00	5.50	4.50	FKM	SUA-2271
E070031106	7.00	3.00	6.00	5.00	NBR	SUA-705
E070031109	7.00	3.00	6.00	5.00	NBR	SUA-2225
E070046601	7.00	4.00	5.00	4.00	FKM	SUA-1782
E070041006	7.00	4.00	5.00	4.00	NBR	SUA-2350
E070041124	7.15	4.00	4.00	3.00	NBR	SUA-2355
E070041120	7.50	4.00	3.70	2.70	NBR	SUA-1547
E070046501	7.50	4.00	4.00	3.00	FKM	SUA-688
E070046708	7.50	4.00	4.00	3.00	FKM	SUA-2034
E07004L508	7.50	4.00	4.00	3.00	PU	PUA-790
E070040901	7.50	4.00	5.00	4.00	NBR	SUA-880
E07004L509	7.50	4.00	5.00	4.00	PU	PUA-675
E070046702	7.50	4.00	5.10	4.10	FKM	SUA-181
E07003L507	7.54	3.57	5.50	4.50	PU	PUA-528
E070038701	7.85	3.50	5.45	4.45	PU	PUA-355
E070031002	7.93	3.17	3.40	2.40	NBR	SUA-1188
E070041003	7.93	4.00	3.40	2.40	NBR	SUA-1189
E070031102	8.00	3.00	5.50	4.50	NBR	SUA-1878
E070031003	8.00	3.00	7.00	6.00	NBR	SUA-1792
E070041102	8.00	4.00	3.50	2.50	NBR	SUA-1317
E070046704	8.00	4.00	3.50	2.50	FKM	SUA-1388
E070041002	8.00	4.00	4.00	3.00	NBR	SUA-1106
E070046706	8.00	4.00	4.00	3.00	FKM	SUA-1721
E070046707	8.00	4.00	5.00	4.00	FKM	SUA-1822
E070041002	8.00	4.00	5.00	4.00	NBR	SUA-385
E07004L511	8.00	4.00	5.00	4.00	PU	PUA-726
E07004L518	8.00	4.00	5.00	4.00	PU	PUA-940
E07004L508	8.00	4.00	5.20	4.20	PU	PUA-618
E07004L510	8.00	4.00	5.20	4.20	PU	PUA-701
E070051104	8.00	5.00	3.10	2.10	NBR	SUA-1484
E070056702	8.00	5.00	3.50	2.50	FKM	SUA-1116
E070031107	8.50	3.00	5.00	4.00	NBR	SUA-1325
E07003L505	8.50	3.00	5.00	4.00	PU	PUA-363
E070046705	8.50	4.00	4.50	3.50	FKM	SUA-1512
E07004L505	8.50	4.00	4.80	3.80	PU	PUA-455
E070031110	9.00	3.00	4.00	3.00	NBR	SUA-2478
E070041004	9.00	4.00	5.00	4.00	NBR	SUA-1861
E070050802	9.00	5.00	3.00	2.00	NBR	SUA-1304
E070051102	9.00	5.00	3.40	2.40	NBR	SUA-1882
E070050801	9.00	5.00	3.50	2.50	NBR	SUA-1000
E07005L503	9.20	5.50	3.00	2.00	PU	PUA-381
E070051107	9.50	5.00	4.20	3.20	NBR	SUA-557
E070061109	9.50	6.00	4.00	3.00	NBR	SUA-2124
E07003L502	9.52	3.17	4.17	3.17	PU	PUA-329
E07004L503	9.80	4.00	5.00	4.00	PU	PUA-452
E070021103	10.00	2.00	5.00	4.00	NBR	SUA-2376

Part No.	D (H10)	d (f8/h9)	L (+0.2)	H	Material	Mould No.
E07003L503	10.00	3.00	5.00	4.00	PU	PUA-359
E07003L503	10.00	3.00	5.00	4.00	PU	PUA-504
E07003L506	10.00	3.50	5.00	4.00	PU	PUA-512
E070041122	10.00	4.00	4.20	3.20	NBR	SUA-2257
E070046703	10.00	4.00	5.00	4.00	FKM	SUA-971
E07004V201	10.00	4.00	5.00	4.00	NBR	SUA-1324
E07004U201	10.00	4.00	5.00	4.00	FKM	SUA-1639
E070041104	10.00	4.00	5.00	4.00	NBR	SUA-106
E07004L513	10.00	4.00	5.00	4.00	PU	PUA-741
E07004L504	10.00	4.00	5.00	4.00	PU	PUA-454
E070040801	10.00	4.00	5.00	4.00	NBR	SUA-2116
E07004L517	10.00	4.00	5.30	4.30	PU	PUA-875
E070041103	10.00	4.00	6.00	5.00	NBR	SUA-1879
E070041118	10.00	4.50	4.00	3.00	NBR	SUA-958
E07004L514	10.00	4.50	4.00	3.00	PU	PUA-751
E070058901	10.00	5.00	3.50	2.50	PU	PUA-328
E070051113	10.00	5.00	3.50	2.50	NBR	SUA-1290
E070051111	10.00	5.00	4.00	3.00	NBR	SUA-1974
E070056601	10.00	5.00	5.50	4.50	FKM	SUA-1683
E07005L507	10.00	5.00	9.00	8.00	PU	PUA-552
E070061126	10.00	6.00	3.00	2.00	NBR	SUA-914
E070066706	10.00	6.00	3.00	2.00	FKM	SUA-2413
E070061106	10.00	6.00	4.00	3.00	NBR	SUA-1900
E070061137	10.00	6.00	4.00	3.00	NBR	SUA-1552
E070066701	10.00	6.00	5.50	4.50	FKM	SUA-938
E07006L507	10.00	6.00	5.63	4.63	PU	PUA-322
E070031108	10.20	3.50	6.30	5.30	NBR	SUA-1823
E070041001	10.50	4.50	5.00	4.00	NBR	SUA-1032
E07005L502	10.50	5.00	3.80	2.80	PU	PUA-367
E070041119	11.00	4.35	6.00	5.00	NBR	SUA-1210
E07004L507	11.00	4.50	6.00	5.00	PU	PUA-596
E070051004	11.00	5.00	6.00	5.00	NBR	SUA-1977
E07005L509	11.00	5.00	8.00	7.00	PU	PUA-674
E070071106	11.00	7.00	4.50	3.50	NBR	SUA-1894
E07007L507	11.00	7.70	3.00	2.00	PU	PUA-637
E07008L301	11.00	8.00	3.20	2.20	AFLAS	SUA-1933
E070045918	11.11	4.76	4.31	3.31	PU	PUA-300
E07004L502	11.20	4.85	9.00	8.00	PU	PUA-317
E07005L513	11.88	5.53	5.76	4.76	PU	PUA-930
E070068701	11.90	6.00	4.00	3.00	PU	PUA-555
E070041106	12.00	4.00	5.00	4.00	NBR	SUA-1881
E07004L516	12.00	4.00	5.00	4.00	PU	PUA-870
E070041117	12.00	4.00	6.00	5.00	NBR	SUA-920
E070041105	12.00	4.00	6.50	5.50	NBR	SUA-1880
E07004L515	12.00	4.00	11.00	10.00	PU	PUA-812
E070051109	12.00	5.00	5.00	4.00	NBR	SUA-1884
E07005L501	**12.00**	**5.00**	**6.00**	**5.00**	**PU**	**PUA-109**
E07005L501	12.00	5.00	6.00	5.00	PU	PUA-535
E070058902	12.00	5.00	6.00	5.00	PU	PUA-601
E070051103	12.00	5.00	6.00	5.00	NBR	SUA-1886
E070051101	12.00	5.00	6.50	5.50	NBR	SUA-112
E070056701	12.00	5.00	6.50	5.50	FKM	SUA-826

Bold sizes are readily available in stock.
Other materials are available on request.

E07

Single Acting Symmetrical Seal

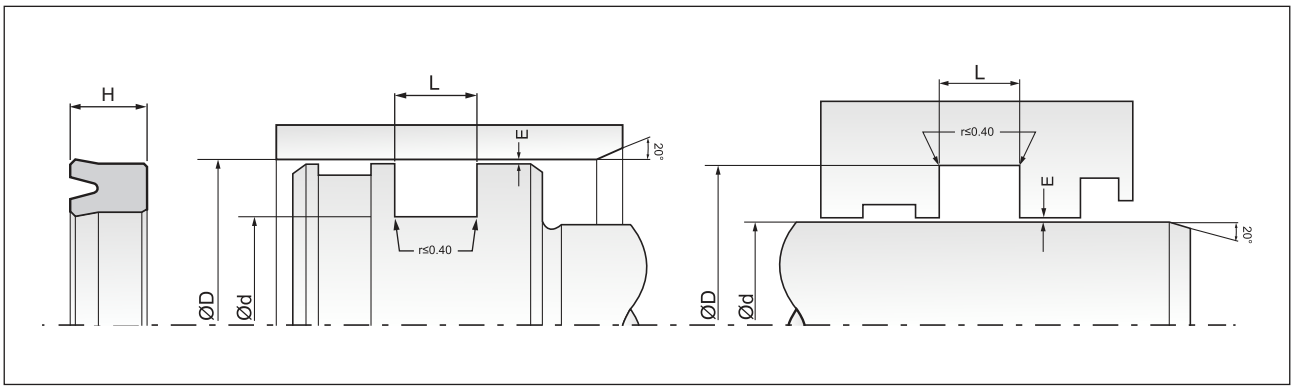

Part No.	D (H10)	d (f8/h9)	L (+0.2)	H	Material	Mould No.
E070051112	12.00	5.00	8.00	7.00	NBR	SUA-2282
E070051002	12.00	5.50	5.00	4.00	NBR	SUA-1549
E07005L506	12.00	5.50	5.00	4.00	PU	PUA-516
E07005L505	12.00	5.50	8.50	7.50	PU	PUA-498
E070055901	12.00	5.50	9.50	8.50	PU	PUA-848
E070061012	12.00	6.00	3.50	2.50	NBR	SUA-2254
E070061124	12.00	6.00	4.50	3.50	NBR	SUA-824
E07006L534	12.00	6.00	4.50	3.50	PU	PUA-847
E07006L506	12.00	6.00	5.00	4.00	PU	PUA-150
E070061128	12.00	6.00	5.00	4.00	NBR	SUA-141
E070066704	12.00	6.00	5.00	4.00	FKM	SUA-2213
E07006L514	12.00	6.00	5.50	4.50	PU	PUA-431
E070061013	12.00	6.00	5.50	4.50	NBR	SUA-2295
E070061127	12.00	6.00	5.80	4.80	NBR	SUA-932
E07006L522	12.00	6.00	6.00	5.00	PU	PUA-633
E070061105	12.00	6.00	6.00	5.00	NBR	SUA-1903
E07006L533	12.00	6.00	6.00	5.00	PU	PUA-823
E07006L536	12.00	6.00	6.20	5.20	PU	PUA-926
E07006L501	**12.00**	**6.00**	**6.50**	**5.50**	**PU**	**PUA-222**
E070061130	12.00	6.00	7.00	6.00	NBR	SUA-1219
E070061009	12.00	6.00	7.00	6.00	NBR	SUA-1658
E07006L527	12.00	6.00	7.00	6.00	PU	PUA-720
E070066601	12.00	6.00	9.00	8.00	FKM	SUA-1585
E07006L519	12.00	6.00	9.00	8.00	PU	PUA-133
E070061125	12.00	6.00	9.00	8.00	NBR	SUA-885
E07006L535	12.00	6.00	10.00	9.00	PU	PUA-867
E070071110	12.00	7.00	3.50	2.50	NBR	SUA-805
E070073402	12.00	7.00	4.50	3.50	EPDM	SUA-1827
E070071105	12.00	7.00	5.00	4.00	NBR	SUA-1895
E070071112	12.00	7.00	6.00	5.00	NBR	SUA-2385
E070071111	12.00	7.00	7.00	6.00	NBR	SUA-1566
E070081141	12.00	8.00	3.40	2.40	NBR	SUA-2453
E070081122	12.00	8.00	3.50	2.50	NBR	SUA-865
E070081101	12.00	8.00	4.00	3.00	NBR	SUA-1313
E070081108	12.00	8.00	5.00	4.00	NBR	SUA-1888
E07008L508	12.00	8.00	6.00	5.00	PU	PUA-344
E07008L401	12.20	8.50	6.00	5.00	PU	PUA-613
E07004L512	12.50	4.50	5.50	4.50	PU	PUA-735
E070041201	12.50	4.50	5.50	4.50	NBR	SUA-2256
E070041101	12.50	4.50	6.00	5.00	NBR	SUA-1029
E070051101	12.50	5.50	8.20	7.20	NBR	SUA-2155
E070061136	12.50	6.00	9.00	8.00	NBR	SUA-2300
E070061138	12.50	6.50	4.00	3.00	NBR	SUA-2455
E0706L523	12.50	6.50	7.00	6.00	PU	PUA-650
E07006L517	12.50	6.50	9.00	8.00	PU	PUA-486
E07005X401	12.70	5.00	4.00	3.00	PU	PUA-894
E070051116	12.70	5.00	9.00	8.00	NBR	SUA-721
E07006L511	12.70	6.00	5.00	4.00	PU	PUA-387
E070060301	12.70	6.00	5.00	4.00	NBR	SUA-1002
E07006L509	12.70	6.00	6.50	5.50	PU	PUA-346
E07006L504	12.70	6.00	6.90	5.90	PU	PUA-291
E07006L502	12.70	6.00	7.00	6.00	PU	PUA-232

Part No.	D (H10)	d (f8/h9)	L (+0.2)	H	Material	Mould No.
E07006L505	12.70	6.00	8.80	7.80	PU	PUA-295
E070061010	12.70	6.35	4.17	3.17	NBR	SUA-796
E070061108	12.70	6.35	4.18	3.18	NBR	SUA-1898
E070066707	12.70	6.35	7.35	6.35	FKM	SUA-2503
E07006L518	12.70	6.40	4.20	3.20	PU	PUA-500
E07006L521	12.70	6.40	4.20	3.20	PU	PUA-565
E070060803	12.70	6.40	4.20	3.20	NBR	SUA-1654
E070071102	12.70	7.92	5.76	4.76	NBR	SUA-1850
E07007L501	12.70	7.93	3.35	2.35	PU	PUA-286
E070073201	12.70	7.93	4.17	3.17	EPDM	SUA-933
E070073401	12.70	7.93	4.17	3.17	EPDM	SUA-899
E070071109	12.70	7.93	5.76	4.76	NBR	SUA-789
E070071109	12.70	7.93	5.76	4.76	NBR	SUA-813
E07006L513	12.80	6.00	5.00	4.00	PU	PUA-427
E070060801	12.80	6.50	6.50	5.50	NBR	SUA-806
E07005L508	13.00	5.00	6.00	5.00	PU	PUA-621
E070051003	13.00	5.50	5.20	4.20	NBR	SUA-1845
E070066702	13.00	6.00	5.00	4.00	FKM	SUA-1231
E070063501	13.00	6.00	5.00	4.00	EPDM	SUA-2309
E07006L525	13.00	6.00	8.00	7.00	PU	PUA-686
E070061103	13.00	6.00	9.00	8.00	NBR	SUA-648
E07006L526	13.00	6.00	9.00	8.00	PU	PUA-705
E070061110	13.00	6.00	9.00	8.00	NBR	SUA-2025
E070071101	13.00	7.00	4.50	3.50	NBR	SUA-1014
E07007L513	13.00	7.00	5.00	4.00	PU	PUA-935
E070071107	13.00	7.00	5.50	4.50	NBR	SUA-1893
E070081111	13.00	8.00	4.00	3.00	NBR	SUA-596
E07008L506	13.00	8.00	4.00	3.00	PU	PUA-310
E070081003	13.00	8.00	5.00	4.00	NBR	SUA-2301
E070081128	13.00	8.00	6.00	5.00	NBR	SUA-1244
E070081120	13.50	8.00	5.00	4.00	NBR	SUA-812
E07009L506	13.50	9.00	5.00	4.00	PU	PUA-309
E070091113	13.50	9.00	5.00	4.00	NBR	SUA-1297
E070101106	13.50	10.00	3.10	2.10	NBR	SUA-2073
E070041121	14.00	4.00	13.00	12.00	NBR	SUA-2217
E070051108	14.00	5.00	5.50	4.50	NBR	SUA-1883
E07005L510	14.00	5.00	7.00	6.00	PU	PUA-772
E070051110	14.00	5.00	9.00	8.00	NBR	SUA-1885
E070058903	14.00	5.50	5.00	4.00	PU	PUA-792
E070061101	14.00	6.00	5.00	4.00	NBR	SUA-1314
E070061103	14.00	6.00	5.00	4.00	NBR	SUA-1969
E070061102	14.00	6.00	7.00	6.00	NBR	SUA-1901
E070061135	14.00	6.00	8.00	7.00	NBR	SUA-2047
E07006L530	14.00	6.00	8.00	7.00	PU	PUA-788
E07006L524	14.00	6.00	9.00	8.00	PU	PUA-672
E07006L508	14.00	6.00	9.80	8.80	PU	PUA-337
E070061014	14.00	6.00	11.00	10.00	NBR	SUA-2353
E070061132	14.00	6.00	12.50	11.50	NBR	SUA-1478
E07006L520	14.00	6.50	7.00	6.00	PU	PUA-538
E070072201	14.00	7.00	5.00	4.00	CR	SUA-2179
E07007L509	14.00	7.00	5.00	4.00	PU	PUA-796
E070071108	14.00	7.00	6.30	5.30	NBR	SUA-2439

Bold sizes are readily available in stock.
Other materials are available on request.

E07

Single Acting Symmetrical Seal

MAX SPARE LIMITED
QUALITY. PRECISION. SPEED.

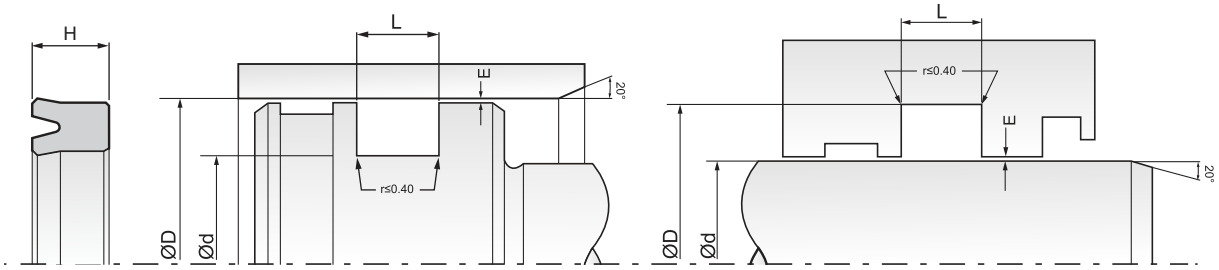

Part No.	D (H10)	d (f8/h9)	L (+0.2)	H	Material	Mould No.
E07007L508	14.00	7.00	7.00	6.00	PU	PUA-781
E0700l510	14.00	7.00	7.50	6.50	PU	PUA-877
E070071103	14.00	7.00	8.00	7.00	NBR	SUA-1897
E070076701	14.00	7.00	9.00	8.00	FKM	SUA-2258
E07007L504	14.00	7.50	5.00	4.00	PU	PUA-378
E070084502	14.00	8.00	3.00	2.00	VMQ	SUA-2205
E07008L512	14.00	8.00	4.00	3.00	PU	PUA-471
E070086606	14.00	8.00	4.20	3.20	FKM	SUA-1802
E07008L517	14.00	8.00	5.00	4.00	PU	PUA-556
E070081135	14.00	8.00	5.00	4.00	NBR	SUA-2042
E070086707	14.00	8.00	5.00	4.00	FKM	SUA-2415
E070081001	14.00	8.00	5.50	4.50	NBR	SUA-2294
E07008L510	14.00	8.00	7.00	6.00	PU	PUA-117
E070081104	14.00	8.00	7.00	6.00	NBR	SUA-1892
E07008L522	14.00	8.00	7.30	6.30	PU	PUA-699
E07008L501	14.00	8.00	7.50	6.50	PU	PUA-782
E07008L518	14.00	8.00	9.00	8.00	PU	PUA-573
E07009L502	14.00	9.00	4.50	3.50	PU	PUA-287
E070091105	14.00	9.00	4.50	3.50	NBR	SUA-1907
E070091114	14.00	9.00	5.00	4.00	NBR	SUA-1332
E07009L503	14.00	9.00	5.00	4.00	PU	PUA-292
E070091005	14.00	9.30	3.70	2.70	NBR	SUA-1514
E070091005	14.00	9.30	3.70	2.70	NBR	SUA-1517
E070101142	14.00	10.00	3.00	2.00	NBR	SUA-841
E070101154	14.00	10.00	3.30	2.30	NBR	SUA-1853
E070106705	14.00	10.00	3.50	2.50	FKM	SUA-1123
E07010L301	14.00	10.00	3.80	2.80	AFLAS	SUA-2224
E070100802	14.00	10.00	4.00	3.00	NBR	SUA-797
E070101119	14.00	10.00	4.00	3.00	NBR	SUA-625
E070101004	14.00	10.00	5.00	4.00	NBR	SUA-1865
E07010L522	14.28	10.31	3.30	2.30	PU	PUA-805
E07005L401	14.83	5.51	6.70	5.70	PU	PUA-853
E0700L512	15.00	5.00	9.00	8.00	PU	PUA-820
E070061107	15.00	6.00	6.00	5.00	NBR	SUA-1899
E070061011	15.00	6.00	9.00	8.00	NBR	SUA-2010
E07007L512	15.00	7.00	6.10	5.10	PU	PUA-928
E070071104	15.00	7.00	8.00	7.00	NBR	SUA-1896
E070081107	15.00	8.00	3.50	2.50	NBR	SUA-1889
E07008L520	15.00	8.00	4.00	3.00	PU	PUA-666
E070086607	15.00	8.00	5.00	4.00	FKM	SUA-1311
E070081002	15.00	8.00	5.00	4.00	NBR	SUA-2297
E070086602	15.00	8.00	6.00	5.00	FKM	SUA-1161
E070081106	15.00	8.00	6.50	5.50	NBR	SUA-1890
E07008L525	15.00	8.00	6.50	5.50	PU	PUA-811
E070081125	15.00	8.00	6.70	5.70	NBR	SUA-1065
E07008L509	15.00	8.00	6.70	5.70	PU	PUA-426
E07008L527	15.00	8.00	6.70	5.70	PU	PUA-890
E070083801	15.00	8.00	7.00	6.00	VMQ	SUA-1508
E070084601	15.00	8.00	7.00	6.00	VMQ	SUA-1312
E070081137	15.00	8.00	7.00	6.00	NBR	SUA-2188
E07008L504	15.00	8.00	8.00	7.00	PU	PUA-791
E070081109	15.00	8.00	9.00	8.00	NBR	SUA-1887

Part No.	D (H10)	d (f8/h9)	L (+0.2)	H	Material	Mould No.
E07008L516	15.00	8.00	9.36	8.36	PU	PUA-550
E07008L524	15.00	8.00	11.00	10.00	PU	PUA-737
E070091106	15.00	9.00	5.00	4.00	NBR	SUA-1908
E07009L514	15.00	9.00	6.00	5.00	PU	PUA-730
E07009L515	15.00	9.00	7.00	6.00	PU	PUA-760
E07009L513	15.00	9.00	9.00	8.00	PU	PUA-729
E070098901	15.00	9.50	9.00	8.00	PU	PUA-719
E07010L512	15.00	10.00	4.00	3.00	PU	PUA-459
E070101149	15.00	10.00	4.50	3.50	NBR	SUA-1353
E07010L521	15.00	10.00	4.50	3.50	PU	PUA-767
E070101101	15.00	10.00	5.00	4.00	NBR	SUA-1915
E070101144	15.00	10.00	5.50	4.50	NBR	SUA-991
E07010L526	15.00	10.00	6.00	5.00	PU	PUA-828
E070101159	15.00	10.00	6.00	5.00	NBR	SUA-1342
E070106603	15.00	10.00	6.00	5.00	FKM	SUA-2484
E07011L507	15.00	11.00	3.50	2.50	PU	PUA-642
E070110802	15.00	11.00	3.70	2.70	NBR	SUA-1428
E070110801	15.00	11.00	3.80	2.80	NBR	SUA-1305
E070111002	15.00	11.00	4.40	3.40	NBR	SUA-1631
E07011U201	15.00	11.50	4.50	3.50	FKM	SUA-2215
E07011U202	15.35	11.15	4.50	3.50	FKM	SUA-2496
E07009L511	15.50	9.50	4.20	3.20	PU	PUA-647
E07006L512	15.79	6.73	7.35	6.35	PU	PUA-409
E070084501	15.80	8.00	6.80	5.80	VMQ	SUA-1787
E070081137	15.80	8.00	7.00	6.00	NBR	SUA-2255
E070097901	15.86	9.52	4.20	3.20	HYT-1	PUA-443
E07007L502	15.87	7.93	7.35	6.35	PU	PUA-298
E070091002	15.87	9.52	3.38	2.38	NBR	SUA-981
E070091116	15.88	9.53	4.17	3.17	NBR	SUA-1981
E07008L513	15.90	8.00	7.00	6.00	PU	PUA-472
E070061129	16.00	6.00	5.50	4.50	NBR	SUA-996
E070061104	16.00	6.00	6.00	5.00	NBR	SUA-1902
E07006L532	16.00	6.00	9.00	8.00	PU	PUA-819
E070068901	16.00	6.35	5.50	4.50	PU	PUA-854
E070075901	16.00	7.00	6.00	5.00	PU	PUA-804
E07007L503	16.00	7.00	7.00	6.00	PU	PUA-304
E07008D601	16.00	8.00	4.70	3.70	HNBR	SUA-691
E070086705	16.00	8.00	5.00	4.00	FKM	SUA-1229
E070088L523	16.00	8.00	5.00	4.00	PU	PUA-406
E070081123	16.00	8.00	5.50	4.50	NBR	SUA-948
E070081116	16.00	8.00	6.00	5.00	NBR	SUA-646
E07008L514	16.00	8.00	6.00	5.00	PU	PUA-193
E070086702	16.00	8.00	6.50	5.50	FKM	SUA-819
E07008L502	**16.00**	**8.00**	**6.70**	**5.70**	**PU**	**PUA-194**
E07008L519	16.00	8.00	7.00	6.00	PU	PUA-591
E070086605	16.00	8.00	7.00	6.00	FKM	SUA-1720
E07008L519	**16.00**	**8.00**	**7.00**	**6.00**	**PU**	**PUA-766**
E07008L403	16.00	8.00	7.00	6.00	PU	PUA-807
E070081139	16.00	8.00	7.70	6.70	NBR	SUA-2310
E07008L503	16.00	8.00	8.00	7.00	PU	PUA-783
E070086706	16.00	8.00	8.00	7.00	FKM	SUA-2130
E070081132	16.00	8.00	9.00	8.00	NBR	SUA-229

Bold sizes are readily available in stock.
Other materials are available on request.

E07

Single Acting Symmetrical Seal

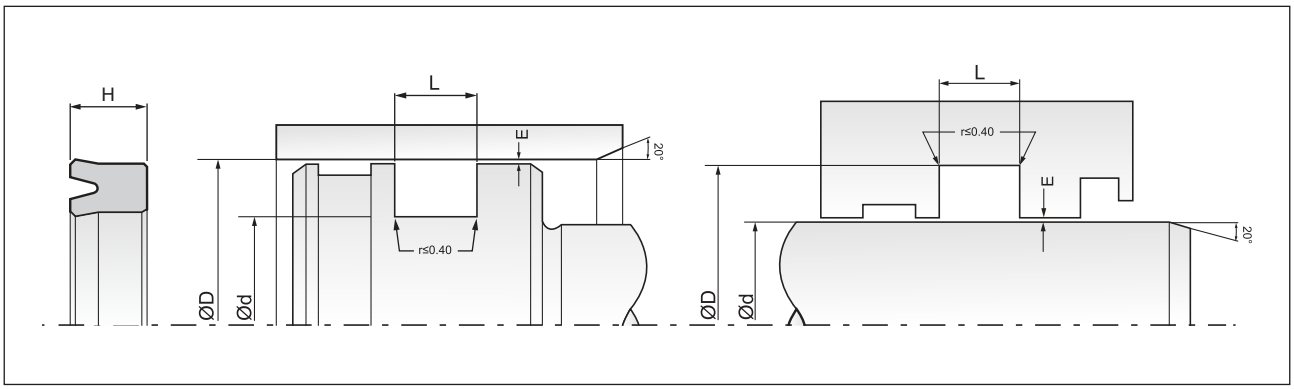

Part No.	D (H10)	d (f8/h9)	L (+0.2)	H	Material	Mould No.
E070086703	16.00	8.00	9.00	8.00	FKM	SUA-839
E07008L515	16.00	8.00	9.00	8.00	PU	PUA-532
E070081136	16.00	8.00	9.00	8.00	NBR	SUA-2139
E07008L507	16.00	8.50	3.70	2.70	PU	PUA-326
E070091110	16.00	9.00	4.00	3.00	NBR	SUA-1062
E070091104	16.00	9.00	5.00	4.00	NBR	SUA-1906
E07009L507	16.00	9.00	7.00	6.00	PU	PUA-505
E07009L501	16.00	9.50	4.00	3.00	PU	PUA-438
E07009L505	16.00	9.50	7.00	6.00	PU	PUA-305
E070101145	16.00	10.00	4.00	3.00	NBR	SUA-1030
E070101005	16.00	10.00	4.30	3.30	NBR	SUA-1930
E07010L518	16.00	10.00	4.30	3.30	PU	PUA-684
E070106601	16.00	10.00	4.60	3.60	FKM	SUA-2015
E070101111	16.00	10.00	5.00	4.00	NBR	SUA-132
E07010L507	**16.00**	**10.00**	**5.00**	**4.00**	**PU**	**PUA-327**
E07010U201	16.00	10.00	5.00	4.00	FKM	SUA-2499
E07010L506	16.00	10.00	5.50	4.50	PU	PUA-211
E070101150	16.00	10.00	6.00	5.00	NBR	SUA-1638
E07010L517	16.00	10.00	6.00	5.00	PU	PUA-673
E07010L509	16.00	10.00	6.50	5.50	PU	PUA-352
E07010L528	16.00	10.00	6.50	5.50	PU	PUA-864
E070101002	16.00	10.00	7.00	6.00	NBR	SUA-1506
E07010L514	16.00	10.00	7.00	6.00	PU	PUA-515
E070104501	16.00	10.00	7.00	6.00	VMQ	SUA-1623
E070106706	16.00	10.00	7.00	6.00	FKM	SUA-1410
E07010L523	16.00	10.00	7.50	6.50	PU	PUA-806
E07010L513	16.00	10.00	9.00	8.00	PU	PUA-476
E070111111	16.00	11.00	3.20	2.20	NBR	SUA-992
E070121025	16.00	12.00	3.70	2.70	NBR	SUA-1998
E070120901	16.00	12.00	3.80	2.80	NBR	SUA-2168
E07012L530	16.00	12.00	4.00	3.00	PU	PUA-639
E07012L508	**16.00**	**12.00**	**6.50**	**5.50**	**PU**	**PUA-268**
E07012L541	16.00	12.00	7.00	6.00	PU	PUA-917
E070121020	16.00	12.00	9.00	8.00	NBR	SUA-1659
E070131115	16.00	13.00	5.00	4.00	NBR	SUA-1020
E07011L504	16.30	11.70	7.00	6.00	PU	PUA-335
E07008L511	16.45	8.60	4.30	3.30	PU	PUA-447
E07006L516	16.50	6.00	8.65	7.65	PU	PUA-456
E070060804	17.00	6.00	7.00	6.00	NBR	SUA-2497
E070071113	17.00	7.00	4.50	3.50	NBR	SUA-2498
E070078701	17.00	7.00	8.00	7.00	PU	PUA-742
E07007L511	17.00	7.00	9.00	8.00	PU	PUA-879
E070081121	17.00	8.00	6.30	5.30	NBR	SUA-862
E070081102	17.00	8.00	7.00	6.00	NBR	SUA-252
E070091111	17.00	9.50	6.50	5.50	NBR	SUA-1148
E070101107	17.00	10.00	6.00	5.00	NBR	SUA-2089
E070111106	17.00	11.00	4.00	3.00	NBR	SUA-581
E07011L508	17.00	11.00	5.00	4.00	PU	PUA-749
E07011L502	**17.00**	**11.00**	**8.00**	**7.00**	**PU**	**PUA-259**
E070121156	17.00	12.00	4.00	3.00	NBR	SUA-2445
E070126604	17.00	12.00	4.40	3.40	FKM	SUA-998
E070117801	17.50	11.00	7.30	6.30	ACT-1	PUA-566

Part No.	D (H10)	d (f8/h9)	L (+0.2)	H	Material	Mould No.
E07005L504	17.62	5.74	5.74	4.74	PU	PUA-407
E07006L526	18.00	6.00	9.00	8.00	PU	PUA-771
E070071001	18.00	7.00	9.00	8.00	NBR	SUA-994
E07007L505	18.00	7.50	7.00	6.00	PU	PUA-451
E070081119	18.00	8.00	6.00	5.00	NBR	SUA-748
E070081114	18.00	8.00	7.00	6.00	NBR	SUA-859
E07008L521	18.00	8.00	9.00	8.00	PU	PUA-693
E070081126	18.00	8.00	9.00	8.00	NBR	SUA-1070
E070101141	18.00	10.00	4.00	3.00	NBR	SUA-825
E07010L501	**18.00**	**10.00**	**6.00**	**5.00**	**PU**	**PUA-466**
E070101136	18.00	10.00	6.00	5.00	NBR	SUA-678
E070101136	18.00	10.00	6.00	5.00	NBR	SUA-741
E07010L501	18.00	10.00	6.00	5.00	PU	PUA-703
E070101143	18.00	10.00	6.50	5.50	NBR	SUA-955
E07010V301	18.00	10.00	6.90	5.90	NBR	SUA-1863
E070101162	18.00	10.00	7.00	6.00	NBR	SUA-2462
E070101155	18.00	10.00	7.30	6.30	NBR	SUA-1928
E07010L505	**18.00**	**10.00**	**8.00**	**7.00**	**PU**	**PUA-197**
E070101103	18.00	10.00	9.00	8.00	NBR	SUA-1910
E07010L525	18.00	10.00	9.00	8.00	PU	PUA-821
E070111104	18.00	11.00	5.00	4.00	NBR	SUA-1300
E070121143	18.00	12.00	3.50	2.50	NBR	SUA-982
E070126611	18.00	12.00	3.50	2.50	FKM	SUA-2432
E07012L516	18.00	12.00	4.00	3.00	PU	PUA-319
E070121102	18.00	12.00	4.00	3.00	NBR	SUA-1121
E070121102	18.00	12.00	4.00	3.00	NBR	SUA-1950
E070123501	18.00	12.00	5.00	4.00	EPDM	SUA-2302
E070126609	18.00	12.00	5.50	4.50	FKM	SUA-2050
E070121015	18.00	12.00	6.00	5.00	NBR	SUA-1781
E070121010	18.00	12.00	6.00	5.00	NBR	SUA-713
E070121015	18.00	12.00	6.00	5.00	NBR	SUA-890
E07012L523	18.00	12.00	6.00	5.00	PU	PUA-478
E070121015	18.00	12.00	6.00	5.00	NBR	SUA-2043
E07012L524	18.00	12.00	7.00	6.00	PU	PUA-489
E07012L501	18.00	12.00	7.00	6.00	PU	PUA-405
E070121107	18.00	12.00	7.00	6.00	NBR	SUA-1914
E070128701	18.00	12.00	7.30	6.30	PU	PUA-444
E07012L518	18.00	12.00	8.00	7.00	PU	PUA-388
E07012L502	18.00	12.00	8.00	7.00	PU	PUA-784
E070121157	18.00	12.00	8.00	7.00	NBR	SUA-2467
E070121144	18.00	12.00	8.50	7.50	NBR	SUA-995
E070121021	18.00	12.00	9.00	8.00	NBR	SUA-1657
E07012L534	18.00	12.00	9.00	8.00	PU	PUA-708
E070121014	18.00	12.50	4.00	3.00	NBR	SUA-731
E070131113	18.00	13.00	3.40	2.40	NBR	SUA-851
E07013L505	18.00	13.50	5.00	4.00	PU	PUA-733
E070141128	18.00	14.00	3.80	2.80	NBR	SUA-966
E070110501	18.50	11.50	9.50	8.50	NBR	SUA-2504
E070136601	18.50	13.00	4.20	3.20	FKM	SUA-1804
E070141125	18.50	14.00	3.50	2.50	NBR	SUA-782
E070091006	19.00	9.00	5.00	4.00	NBR	SUA-1746
E070091103	19.00	9.00	7.00	6.00	NBR	SUA-1905

Bold sizes are readily available in stock.
Other materials are available on request.

E07

Single Acting Symmetrical Seal

MAX SPARE LIMITED
QUALITY. PRECISION. SPEED.

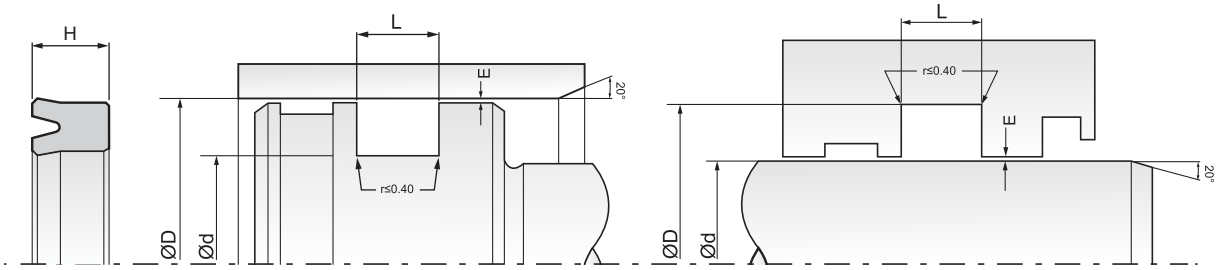

Part No.	D (H10)	d (f8/h9)	L (+0.2)	H	Material	Mould No.
E070094501	19.00	9.00	8.00	7.00	VMQ	SUA-1034
E070101003	19.00	10.00	4.80	3.80	NBR	SUA-1702
E070101139	19.00	10.00	6.60	5.60	NBR	SUA-779
E070106704	19.00	10.00	8.00	7.00	FKM	SUA-838
E07010L401	19.00	10.00	8.50	7.50	PU	PUA-358
E07010L508	**19.00**	**10.00**	**9.00**	**8.00**	**PU**	**PUA-147**
E070112201	19.00	11.00	5.00	4.00	CR	SUA-2180
E070111110	19.00	11.00	6.00	5.00	NBR	SUA-778
E07011L503	19.00	11.00	6.00	5.00	PU	PUA-315
E070126712	19.00	12.00	4.00	3.00	FKM	SUA-2193
E07012L522	19.00	12.00	5.00	4.00	PU	PUA-457
E070121024	19.00	12.00	5.00	4.00	NBR	SUA-1308
E070121106	19.00	12.00	5.50	4.50	NBR	SUA-1309
E07012L513	**19.00**	**12.00**	**6.00**	**5.00**	**PU**	**PUA-152**
E070121029	19.00	12.00	6.00	5.00	NBR	SUA-2197
E070125918	19.00	12.00	6.50	5.50	PU	PUA-284
E070121142	19.00	12.00	6.50	5.50	NBR	SUA-973
E070136401	19.00	13.00	4.00	3.00	FKM	SUA-2268
E070131114	19.00	13.00	6.00	5.00	NBR	SUA-949
E070141130	19.00	14.00	4.00	3.00	NBR	SUA-1082
E07014L501	19.00	14.00	4.50	3.50	PU	PUA-167
E07014K301	19.00	14.00	4.50	3.50	HYT-2	PUA-369
E07014L519	19.00	14.00	5.00	4.00	PU	PUA-649
E070151128	19.00	15.00	4.20	3.20	NBR	SUA-771
E070158901	19.00	15.00	5.50	4.50	PU	PUA-761
E070091115	19.05	9.52	7.50	6.50	NBR	SUA-1436
E07009L510	19.05	9.52	7.50	6.50	PU	PUA-546
E07009L504	19.05	9.52	8.14	7.14	PU	PUA-297
E070096601	19.05	9.52	10.52	9.52	FKM	SUA-1985
E070121123	19.05	12.70	3.80	2.80	NBR	SUA-842
E070121123	19.05	12.70	3.80	2.80	NBR	SUA-792
E07012L535	19.05	12.70	4.10	3.10	PU	PUA-716
E070126401	19.05	12.70	4.17	3.17	FKM	SUA-1534
E070121112	19.05	12.70	4.17	3.17	NBR	SUA-2044
E07012L538	19.05	12.70	4.17	3.17	PU	PUA-850
E070121017	19.05	12.70	5.76	4.76	NBR	SUA-1017
E07013C301	19.05	13.20	5.20	4.20	XNBR	SUA-1655
E07011L509	19.20	11.20	6.00	5.00	PU	PUA-959
E07015L535	19.40	15.00	5.70	4.70	PU	PUA-849
E070101147	19.60	10.70	6.00	5.00	NBR	SUA-1187
E07012AI01	19.76	12.70	5.76	4.76	VMQ	SUA-1726
E070141142	19.84	14.28	3.38	2.38	NBR	SUA-1936
E070061134	20.00	6.00	11.00	10.00	NBR	SUA-1799
E070081105	20.00	8.00	9.00	8.00	NBR	SUA-1891
E070091001	20.00	9.75	9.60	8.60	NBR	SUA-897
E070108901	20.00	10.00	5.70	4.70	PU	PUA-855
E07010L503	**20.00**	**10.00**	**6.00**	**5.00**	**PU**	**PUA-201**
E07010L527	20.00	10.00	6.00	5.00	PU	PUA-857
E07010D501	20.00	10.00	7.00	6.00	HNBR	SUA-963
E070101104	20.00	10.00	7.00	6.00	NBR	SUA-1911
E07010L531	20.00	10.00	7.00	6.00	PU	PUA-907
E070104502	20.00	10.00	7.00	6.00	VMQ	SUA-2466

Part No.	D (H10)	d (f8/h9)	L (+0.2)	H	Material	Mould No.
E070101137	20.00	10.00	7.50	6.50	NBR	SUA-706
E070101137	20.00	10.00	7.50	6.50	NBR	SUA-869
E070106701	20.00	10.00	7.50	6.50	FKM	SUA-2082
E07010L516	20.00	10.00	8.00	7.00	PU	PUA-611
E070101158	20.00	10.00	8.80	7.80	NBR	SUA-2183
E070106703	20.00	10.00	9.00	8.00	FKM	SUA-835
E07010L510	20.00	10.00	9.00	8.00	PU	PUA-356
E070101153	20.00	10.00	9.00	8.00	NBR	SUA-684
E070101001	20.00	10.00	9.00	8.00	NBR	SUA-1191
E070101201	20.00	10.00	9.00	8.00	NBR	SUA-2101
E07010L529	20.00	10.00	9.00	8.00	PU	PUA-878
E070101120	20.00	10.00	11.00	10.00	NBR	SUA-628
E07010L530	20.00	10.00	11.00	10.00	PU	PUA-884
E07012L537	20.00	12.00	3.50	2.50	PU	PUA-817
E070121149	20.00	12.00	4.00	3.00	NBR	SUA-1380
E070120401	20.00	12.00	5.00	4.00	NBR	SUA-1559
E07012L503	**20.00**	**12.00**	**5.40**	**4.40**	**PU**	**PUA-116**
E07012L503	20.00	12.00	5.40	4.40	PU	PUA-536
E07012L517	**20.00**	**12.00**	**6.00**	**5.00**	**PU**	**PUA-159**
E070126603	20.00	12.00	6.00	5.00	FKM	SUA-802
E070121119	20.00	12.00	6.00	5.00	NBR	SUA-559
E070121018	20.00	12.00	6.00	5.00	NBR	SUA-1588
E070121158	20.00	12.00	6.20	5.20	NBR	SUA-2469
E070121013	20.00	12.00	6.50	5.50	NBR	SUA-745
E070121027	20.00	12.00	6.50	5.50	NBR	SUA-2182
E070126713	20.00	12.00	6.70	5.70	FKM	SUA-2313
E07012L505	**20.00**	**12.00**	**6.80**	**5.80**	**PU**	**PUA-200**
E070121141	20.00	12.00	7.00	6.00	NBR	SUA-968
E07012L505	20.00	12.00	7.00	6.00	PU	PUA-439
E07012L528	20.00	12.00	7.40	6.40	PU	PUA-595
E070120501	20.00	12.00	7.50	6.50	HNBR	SUA-964
E07012L520	20.00	12.00	8.00	7.00	PU	PUA-423
E070126708	20.00	12.00	8.00	7.00	FKM	SUA-1175
E070128702	20.00	12.00	8.80	7.80	PU	PUA-631
E07012L509	**20.00**	**12.00**	**9.00**	**8.00**	**PU**	**PUA-260**
E07012L529	20.00	12.50	4.20	3.20	PU	PUA-599
E070121146	20.00	12.50	6.50	5.50	NBR	SUA-1086
E070121153	20.00	12.78	6.00	5.00	NBR	SUA-2185
E070131111	20.00	13.00	4.00	3.00	NBR	SUA-833
E070131112	20.00	13.00	4.50	3.50	NBR	SUA-831
E07013L503	20.00	13.00	5.00	4.00	PU	PUA-386
E070131105	20.00	13.00	6.00	5.00	NBR	SUA-584
E07013L502	20.00	13.00	6.00	5.00	PU	PUA-374
E0701341001	20.00	13.00	6.00	5.00	VMQ	SUA-2002
E07013L501	20.00	13.00	7.00	6.00	PU	PUA-357
E070146401	20.00	14.00	3.50	2.50	FKM	SUA-124
E07014L523	20.00	14.00	3.50	2.50	PU	PUA-816
E070141139	20.00	14.00	3.60	2.60	NBR	SUA-1606
E070141104	20.00	14.00	4.00	3.00	NBR	SUA-180
E07014L508	20.00	14.00	4.00	3.00	PU	PUA-365
E070141102	20.00	14.00	5.00	4.00	NBR	SUA-710
E070141102	20.00	14.00	5.00	4.00	NBR	SUA-1968

Bold sizes are readily available in stock.
Other materials are available on request.

E07

Single Acting Symmetrical Seal

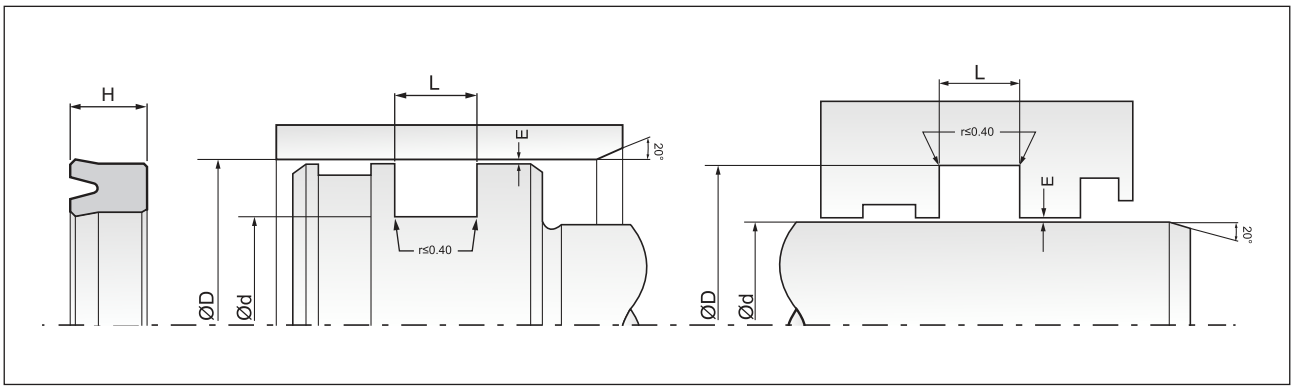

Part No.	D (H10)	d (f8/h9)	L (+0.2)	H	Material	Mould No.
E07014L514	20.00	14.00	5.80	4.80	PU	PUA-533
E07014L511	20.00	14.00	6.00	5.00	PU	PUA-479
E070144301	20.00	14.00	6.00	5.00	VMQ	SUA-1391
E070141134	20.00	14.00	6.00	5.00	NBR	SUA-1923
E07014L516	20.00	14.00	6.30	5.30	PU	PUA-607
E07014L527	20.00	14.00	6.50	5.50	PU	PUA-897
E070141112	20.00	14.00	7.00	6.00	NBR	SUA-1920
E07014L521	20.00	14.00	7.00	6.00	PU	PUA-707
E070146703	20.00	14.00	7.00	6.00	FKM	SUA-2056
E070141141	20.00	14.00	7.20	6.20	NBR	SUA-1642
E070141140	20.00	14.00	8.00	7.00	NBR	SUA-1629
E07014L515	20.00	14.00	8.00	7.00	PU	PUA-547
E07014L526	20.00	14.00	8.50	7.50	PU	PUA-866
E07014L525	20.00	14.00	9.00	8.00	PU	PUA-818
E070151137	20.00	15.00	3.50	2.50	NBR	SUA-1327
E070151133	20.00	15.00	3.50	2.50	NBR	SUA-931
E070151105	20.00	15.00	4.00	3.00	NBR	SUA-1916
E07015L506	20.00	15.80	4.00	3.00	PU	PUA-282
E070161103	20.00	16.00	3.75	2.75	NBR	SUA-1615
E070160801	20.00	16.00	3.80	2.80	NBR	SUA-751
E070161133	20.00	16.00	4.00	3.00	NBR	SUA-707
E07016L520	20.00	16.00	4.50	3.50	PU	PUA-610
E070166701	20.00	16.00	5.00	4.00	FKM	SUA-840
E07016L532	20.00	16.00	6.00	5.00	PU	PUA-885
E07016L534	20.00	16.00	9.00	8.00	PU	PUA-921
E070161159	20.00	16.00	9.00	8.00	NBR	SUA-2414
E070200808	20.00	17.50	26.00	25.00	NBR	SLO-581
E07009L512	20.50	9.50	8.80	7.80	PU	PUA-722
E07011L506	20.50	11.00	7.00	6.00	PU	PUA-458
E070141129	20.50	14.00	6.00	5.00	NBR	SUA-1026
E070161138	20.60	16.00	3.80	2.80	NBR	SUA-942
E070111001	20.63	11.11	5.76	4.76	NBR	SUA-795
E07009L508	21.00	9.00	8.80	7.80	PU	PUA-506
E070101161	21.00	10.00	8.00	7.00	NBR	SUA-2400
E070123301	21.00	12.00	6.00	5.00	EPDM	SUA-1971
E070121030	21.00	12.00	7.00	6.00	NBR	SUA-2321
E070121113	21.00	12.00	8.00	7.00	NBR	SUA-2117
E07012L539	21.00	12.50	5.00	4.00	PU	PUA-858
E070131110	21.00	13.00	6.00	5.00	NBR	SUA-794
E07014L518	21.00	14.00	6.00	5.00	PU	PUA-628
E070141131	21.00	14.00	7.00	6.00	NBR	SUA-1085
E07015L533	21.00	15.00	4.00	3.00	PU	PUA-843
E070151131	21.00	15.00	4.00	3.00	NBR	SUA-857
E07015L532	21.00	15.00	5.00	4.00	PU	PUA-842
E07015L536	21.00	15.00	6.00	5.00	PU	PUA-883
E07016L523	21.20	16.00	5.00	4.00	PU	PUA-713
E070121022	21.43	12.70	7.00	6.00	NBR	SUA-1759
E070081127	22.00	8.00	7.00	6.00	NBR	SUA-1152
E070081124	22.00	8.00	9.00	8.00	NBR	SUA-1035
E070086603	22.00	8.00	9.00	8.00	FKM	SUA-2134
E070091112	22.00	9.00	7.00	6.00	NBR	SUA-1185
E070091102	22.00	9.00	9.00	8.00	NBR	SUA-1101

Part No.	D (H10)	d (f8/h9)	L (+0.2)	H	Material	Mould No.
E070101102	22.00	10.00	7.00	6.00	NBR	SUA-1909
E070106602	22.00	10.00	7.50	6.50	FKM	SUA-2384
E070101105	22.00	10.00	9.00	8.00	NBR	SUA-1904
E07010L519	22.00	10.00	9.00	8.00	PU	PUA-709
E070101140	22.00	10.00	12.00	11.00	NBR	SUA-814
E07012L521	22.00	12.00	5.00	4.00	PU	PUA-450
E070121007	22.00	12.00	6.00	5.00	NBR	SUA-967
E070121008	22.00	12.00	6.00	5.00	NBR	SUA-1455
E070126606	22.00	12.00	6.00	5.00	FKM	SUB-2674
E07012L540	22.00	12.00	6.00	5.00	PU	PUA-902
E07012L520	22.00	12.00	6.50	5.50	PU	PUA-780
E070120816	22.00	12.00	7.00	6.00	NBR	SUA-537
E0701267606	22.00	12.00	8.00	7.00	FKM	SUA-935
E070121011	22.00	12.00	8.00	7.00	NBR	SUA-2206
E07012L504	**22.00**	**12.00**	**8.30**	**7.30**	**PU**	**PUA-121**
E07012L506	**22.00**	**12.00**	**9.00**	**8.00**	**PU**	**PUA-203**
E070123401	22.00	12.00	9.00	8.00	EPDM	SUA-2090
E07012L506	22.00	12.00	9.00	8.00	PU	PUA-691
E070121103	22.00	12.00	9.00	8.00	NBR	SUA-1912
E070124501	22.00	12.00	9.00	8.00	VMQ	SUA-2285
E07012L525	22.00	12.00	11.00	10.00	PU	PUA-540
E07012L532	22.00	12.00	11.50	10.50	PU	PUA-694
E070131002	22.00	13.00	6.90	5.90	NBR	SUA-2159
E070141126	22.00	14.00	5.00	4.00	NBR	SUA-858
E07014L507	22.00	14.00	5.00	4.00	PU	PUA-208
E070141126	22.00	14.00	5.00	4.00	NBR	SUA-791
E07014L510	22.00	14.00	5.50	4.50	PU	PUA-410
E07014L512	**22.00**	**14.00**	**6.00**	**5.00**	**PU**	**PUA-181**
E070141101	22.00	14.00	6.00	5.00	NBR	SUA-714
E07014L512	22.00	14.00	6.00	5.00	PU	PUA-841
E070146701	22.00	14.00	6.50	5.50	FKM	SUA-1396
E070140802	22.00	14.00	6.50	5.50	NBR	SUA-2416
E070141127	22.00	14.00	7.00	6.00	NBR	SUA-1146
E070141107	22.00	14.00	7.00	6.00	NBR	SUA-718
E07014L503	**22.00**	**14.00**	**7.00**	**6.00**	**PU**	**PUA-206**
E070141107	22.00	14.00	7.00	6.00	NBR	SUA-259
E070141115	22.00	14.00	7.50	6.50	NBR	SUA-210
E070141108	22.00	14.00	8.00	7.00	NBR	SUA-257
E07014L520	22.00	14.00	8.00	7.00	PU	PUA-494
E070141111	22.00	14.00	9.00	8.00	NBR	SUA-1921
E07015L537	22.00	15.00	5.00	4.00	PU	PUA-903
E070151103	22.00	15.00	6.00	5.00	NBR	SUA-441
E070151136	22.00	15.00	7.00	6.00	NBR	SUA-167
E070161147	22.00	16.00	3.50	2.50	NBR	SUA-573
E070166501	22.00	16.00	3.50	2.50	FKM	SUA-2417
E070163302	22.00	16.00	3.50	2.50	EPDM	SUA-2411
E07016L528	22.00	16.00	4.00	3.00	PU	PUA-768
E070161107	22.00	16.00	4.00	3.00	NBR	SUA-1917
E070161007	22.00	16.00	4.50	3.50	NBR	SUA-1817
E070160804	22.00	16.00	5.00	4.00	NBR	SUA-1550
E07016L505	**22.00**	**16.00**	**5.00**	**4.00**	**PU**	**PUA-269**
E07016L505	22.00	16.00	5.00	4.00	PU	PUA-490

Bold sizes are readily available in stock.
Other materials are available on request.

E07

Single Acting Symmetrical Seal

MAX SPARE LIMITED
QUALITY. PRECISION. SPEED.

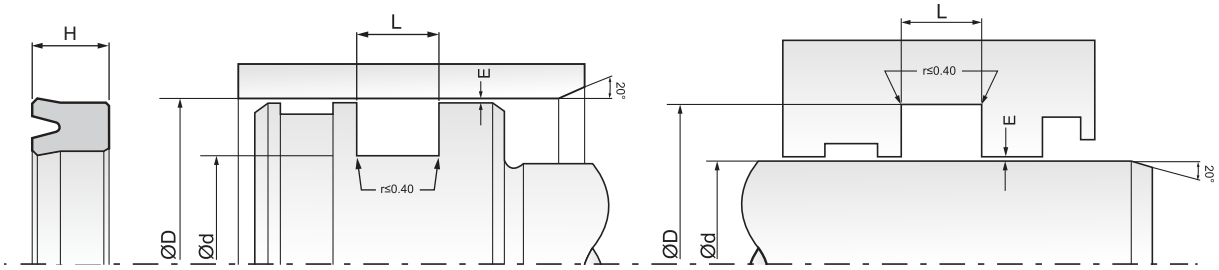

Part No.	D (H10)	d (f8/h9)	L (+0.2)	H	Material	Mould No.
E07016L528	22.00	16.00	5.00	4.00	PU	PUA-769
E070160802	22.00	16.00	5.25	4.25	NBR	SUA-980
E070160802	22.00	16.00	5.25	4.25	NBR	SUA-909
E07016L501	22.00	16.00	5.50	4.50	PU	PUA-778
E070161102	22.00	16.00	6.00	5.00	NBR	SUA-830
E07016L508	22.00	16.00	6.00	5.00	PU	PUA-111
E070161003	22.00	16.00	6.00	5.00	NBR	SUA-487
E070161102	22.00	16.00	6.00	5.00	NBR	SUA-212
E070166703	22.00	16.00	6.00	5.00	FKM	SUA-1303
E07016L504	**22.00**	**16.00**	**6.50**	**5.50**	**PU**	**PUA-368**
E070161143	22.00	16.00	6.50	5.50	NBR	SUA-1359
E070161106	22.00	16.00	7.00	6.00	NBR	SUA-683
E07016L504	22.00	16.00	7.00	6.00	PU	PUA-162
E070161106	22.00	16.00	7.00	6.00	NBR	SUA-1951
E07016L514	22.00	16.00	8.00	7.00	PU	PUA-445
E070161152	22.00	16.00	9.50	8.50	NBR	SUA-1864
E070161144	22.00	16.00	11.00	10.00	NBR	SUA-1360
E070171111	22.00	17.00	4.00	3.00	NBR	SUA-889
E070171101	22.00	17.00	4.50	3.50	NBR	SUA-2149
E070176602	22.00	17.00	5.00	4.00	FKM	SUA-1543
E07018L519	22.00	18.00	4.00	3.00	PU	PUA-586
E07018L527	22.00	18.00	6.00	5.00	PU	PUA-743
E070141144	22.12	14.55	5.20	4.20	NBR	SUA-2476
E070121016	22.22	12.50	6.50	5.50	NBR	SUA-892
E070126714	22.22	12.70	5.75	4.75	FKM	SUA-2471
E070126704	22.22	12.70	5.76	4.76	FKM	SUA-828
E07012L507	22.22	12.70	8.94	7.94	PU	PUA-411
E070126707	22.22	12.70	10.00	9.00	FKM	SUA-1105
E070151130	22.22	15.80	4.96	3.96	NBR	SUA-844
E070151138	22.22	15.87	3.38	2.38	NBR	SUA-2369
E07015L508	22.22	15.87	4.17	3.17	PU	PUA-226
E070150901	22.22	15.87	4.25	3.25	NBR	SUA-1562
E07015L519	22.22	15.87	5.76	4.76	PU	PUA-110
E070151013	22.22	15.87	5.76	4.76	NBR	SUA-2324
E07015L534	22.22	15.87	7.35	6.35	PU	PUA-845
E07017L504	22.22	17.46	4.57	3.57	PU	PUA-312
E07019L507	22.22	19.05	5.76	4.76	PU	PUA-370
E070121154	22.30	12.00	8.00	7.00	NBR	SUA-2207
E070091003	22.40	9.50	6.50	5.50	NBR	SUA-1019
E070151132	22.40	15.00	5.50	4.50	NBR	SUA-923
E07012L531	22.50	12.50	9.00	8.00	PU	PUA-692
E070151012	22.50	15.80	6.30	5.30	NBR	SUA-1807
E07016L518	22.50	16.00	5.50	4.50	PU	PUA-543
E070160901	22.50	16.00	5.50	4.50	NBR	SUA-2482
E07011L401	22.82	11.18	8.35	7.35	PU	PUA-852
E07012L510	**23.00**	**12.00**	**6.75**	**5.75**	**PU**	**PUA-261**
E070131116	23.00	13.00	6.00	5.00	NBR	SUA-1530
E07014L506	23.00	14.00	6.00	5.00	PU	PUA-293
E07014U201	23.00	14.00	7.00	6.00	FKM	SUA-2083
E070151116	23.00	15.00	6.00	5.00	NBR	SUA-281
E070161109	23.00	16.00	5.50	4.50	NBR	SUA-2156
E07016L533	23.00	16.00	5.70	4.70	PU	PUA-891

Part No.	D (H10)	d (f8/h9)	L (+0.2)	H	Material	Mould No.
E070161001	23.00	16.00	6.00	5.00	NBR	SUA-1319
E07016L510	23.00	16.00	7.00	6.00	PU	PUA-320
E070176704	23.00	17.00	5.50	4.50	FKM	SUA-1980
E07017L503	23.00	17.00	6.00	5.00	PU	PUA-303
E07017L506	23.00	17.55	5.00	4.00	PU	PUA-362
E07019L516	23.00	19.00	4.00	3.00	PU	PUA-590
E070201155	23.00	20.00	8.00	7.00	NBR	SUA-2458
E07012L526	23.15	12.38	9.08	8.08	PU	PUA-551
E070090801	23.78	9.52	9.26	8.26	NBR	SUA-708
E070111003	24.00	11.00	11.00	10.00	NBR	SUA-1858
E070121118	24.00	12.00	6.00	5.00	NBR	SUA-203
E07012L527	24.00	12.00	6.00	5.00	PU	PUA-557
E07012L511	**24.00**	**12.00**	**7.00**	**6.00**	**PU**	**PUA-262**
E070121105	24.00	12.00	7.00	6.00	NBR	SUA-1913
E07012L536	24.00	12.00	9.00	8.00	PU	PUA-770
E070121106	24.00	12.00	11.00	10.00	NBR	SUA-218
E07013L504	24.00	13.00	7.00	6.00	PU	PUA-710
E070141104	24.00	14.00	6.00	5.00	NBR	SUA-1922
E070146402	24.00	14.00	6.50	5.50	FKM	SUA-1571
E07014L502	**24.00**	**14.00**	**7.00**	**6.00**	**PU**	**PUA-263**
E070141143	24.00	14.00	7.00	6.00	NBR	SUA-2444
E07014T201	24.00	14.00	7.00	6.00	VMQ	SUA-2296
E070146702	24.00	14.00	8.00	7.00	FKM	SUA-1763
E070141102	24.00	14.00	9.00	8.00	NBR	SUA-213
E070146601	24.00	14.00	9.15	8.15	FKM	SUA-2472
E07014L509	24.00	14.00	11.00	10.00	PU	PUA-389
E07015L528	24.00	15.00	5.75	4.75	PU	PUA-698
E070156801	24.00	15.00	6.00	5.00	FKM	SUA-2251
E070151134	24.00	15.00	6.50	5.50	NBR	SUA-997
E070156602	24.00	15.00	6.56	5.56	FKM	SUA-2049
E07015L505	**24.00**	**15.00**	**8.00**	**7.00**	**PU**	**PUA-254**
E070161149	24.00	16.00	5.00	4.00	NBR	SUA-1666
E070161115	24.00	16.00	6.00	5.00	NBR	SUA-204
E070161006	24.00	16.00	6.00	5.00	NBR/FABRIC	SUA-1786
E070161115	24.00	16.00	6.00	5.00	NBR	SUA-747
E07016L511	**24.00**	**16.00**	**6.00**	**5.00**	**PU**	**PUA-366**
E070161002	24.00	16.00	6.40	5.40	NBR	SUA-1454
E070166705	24.00	16.00	6.50	5.50	FKM	SUA-1730
E07016L503	**24.00**	**16.00**	**6.80**	**5.80**	**PU**	**PUA-223**
E070161137	24.00	16.00	6.80	5.80	NBR	SUA-901
E07016L521	24.00	16.00	6.80	5.80	PU	PUA-697
E070166707	24.00	16.00	6.80	5.80	FKM	SUA-2408
E07016L529	24.00	16.00	7.00	6.00	PU	PUA-779
E070161004	24.00	16.00	7.50	6.50	NBR	SUA-1645
E070161116	24.00	16.00	10.00	9.00	NBR	SUA-1197
E07017L501	**24.00**	**17.00**	**6.00**	**5.00**	**PU**	**PUA-255**
E070171114	24.00	17.00	6.00	5.00	NBR	SUA-1164
E070186603	24.00	18.00	4.50	3.50	FKM	SUA-1386
E07018L513	24.00	18.00	5.00	4.00	PU	PUA-441
E070181102	24.00	18.00	5.00	4.00	NBR	SUA-1924
E070181130	24.00	18.00	5.50	4.50	NBR	SUA-986
E07018L518	24.00	18.00	6.00	5.00	PU	PUA-574

Bold sizes are readily available in stock.
Other materials are available on request.

E07

Single Acting Symmetrical Seal

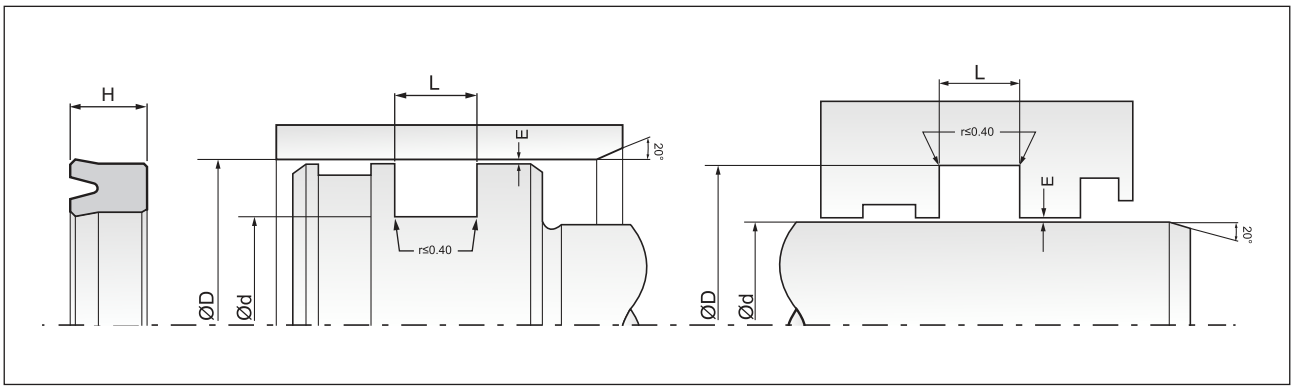

Part No.	D (H10)	d (f8/h9)	L (+0.2)	H	Material	Mould No.
E070181106	24.00	18.00	6.00	5.00	NBR	SUA-635
E070181104	24.00	18.00	6.00	5.00	NBR	SUA-2040
E070181140	24.00	18.00	6.00	5.00	NBR	SUA-2446
E07018L509	24.00	18.00	6.20	5.20	PU	PUA-360
E07018L535	24.00	18.00	9.00	8.00	PU	PUA-918
E07018L503	**24.00**	**18.00**	**10.00**	**9.00**	**PU**	**PUA-257**
E07019L511	24.00	19.00	7.50	6.50	PU	PUA-527
E07020L526	24.00	20.00	3.80	2.80	PU	PUA-702
E070201189	24.00	20.00	4.00	3.00	NBR	SUA-1966
E07015L522	24.40	15.20	9.00	8.00	PU	PUA-101
E070121019	24.50	12.50	10.00	9.00	NBR	SUA-1616
E070136602	24.50	13.20	7.25	6.25	FKM	SUA-1803
E070144302	24.50	14.50	9.00	8.00	VMQ	SUA-2239
E070191127	24.50	19.00	5.50	4.50	NBR	SUA-1558
E070131003	24.80	13.00	5.95	4.95	NBR	SUA-2227
E07006L531	25.00	6.00	16.00	15.00	PU	PUA-793
E070101160	25.00	10.00	10.00	9.00	NBR	SUA-2387
E07010L520	25.00	10.00	11.00	10.00	PU	PUA-731
E070126605	25.00	12.00	6.00	5.00	FKM	SUA-1241
E070126705	25.00	12.00	9.00	8.00	FKM	SUA-863
E070136701	25.00	13.00	8.50	7.50	FKM	SUA-1602
E07014L504	**25.00**	**14.00**	**7.00**	**6.00**	**PU**	**PUA-272**
E070141117	25.00	14.00	7.00	6.00	NBR	SUA-126
E07015L509	25.00	15.00	6.00	5.00	PU	PUA-306
E070151142	25.00	15.00	6.00	5.00	NBR	SUA-2491
E070150902	25.00	15.00	6.60	5.60	NBR	SUA-2483
E070151104	25.00	15.00	7.00	6.00	NBR	SUA-1918
E070151141	25.00	15.00	8.00	7.00	NBR	SUA-2420
E07015L501	**25.00**	**15.00**	**8.30**	**7.30**	**PU**	**PUA-103**
E07015V401	25.00	15.00	8.30	7.30	NBR	SUA-405
E07015L501	25.00	15.00	8.30	7.30	PU	PUA-534
E070156603	25.00	15.00	8.30	7.30	FKM	SUA-2196
E07015L526	25.00	15.00	9.00	8.00	PU	PUA-508
E070151101	25.00	15.00	9.00	8.00	NBR	SUA-1919
E070155901	25.00	15.00	9.00	8.00	PU	PUA-758
E07015L503	**25.00**	**15.00**	**11.00**	**10.00**	**PU**	**PUA-256**
E070161145	25.00	16.00	4.00	3.00	NBR	SUA-1381
E070163401	25.00	16.00	5.00	4.00	EPDM	SUA-704
E070161110	25.00	16.00	6.00	5.00	NBR	SUA-107
E070161150	25.00	16.00	6.00	5.00	NBR	SUA-1682
E070161135	25.00	16.00	6.50	5.50	NBR	SUA-854
E070161010	25.00	16.00	6.50	5.50	NBR	SUA-2342
E070163301	25.00	16.00	7.50	6.50	EPDM	SUA-1972
E070161120	25.00	16.00	7.50	6.50	NBR	SUA-2074
E07016L519	25.00	16.00	8.00	7.00	PU	PUA-548
E070166708	25.00	16.00	8.00	7.00	FKM	SUA-2421
E07016L512	25.00	16.00	8.30	7.30	PU	PUA-380
E07016L516	25.00	16.00	9.00	8.00	PU	PUA-497
E070164501	25.00	16.00	9.00	8.00	VMQ	SUA-2068
E070160805	25.00	16.00	9.00	8.00	NBR	SUA-2473
E07016L509	25.00	16.00	11.00	10.00	PU	PUA-299
E070171113	25.00	17.00	4.00	3.00	NBR	SUA-1114

Part No.	D (H10)	d (f8/h9)	L (+0.2)	H	Material	Mould No.
E07017Q201	25.00	17.00	5.00	4.00	PU	PUA-373
E070171112	25.00	17.00	5.50	4.50	NBR	SUA-944
E070176603	25.00	17.00	5.50	4.50	FKM	SUA-2262
E070173401	25.00	17.00	6.00	5.00	EPDM	SUA-820
E070174501	25.00	17.00	6.00	5.00	VMQ	SUA-1373
E07017CG01	25.00	17.00	6.00	5.00	PU	PUA-748
E07017L509	**25.00**	**17.00**	**6.00**	**5.00**	**PU**	**PUA-905**
E07017L502	**25.00**	**17.00**	**6.70**	**5.70**	**PU**	**PUA-258**
E070176401	25.00	17.00	7.00	6.00	FKM	SUA-1083
E070171115	25.00	17.00	7.50	6.50	NBR	SUA-1178
E07017L508	25.00	17.00	8.00	7.00	PU	PUA-651
E070181115	25.00	18.00	5.00	4.00	NBR	SUA-193
E07018L506	**25.00**	**18.00**	**6.00**	**5.00**	**PU**	**PUA-214**
E070181131	25.00	18.00	6.00	5.00	NBR	SUA-1272
E070180601	25.00	18.00	6.00	5.00	NBR/FABRIC	SUA-1956
E070181137	25.00	18.00	6.00	5.00	NBR	SUA-2330
E070184301	25.00	18.00	6.50	5.50	VMQ	SUA-1739
E07018L529	25.00	18.00	6.50	5.50	PU	PUA-777
E070181112	25.00	18.00	7.00	6.00	NBR	SUA-572
E070186706	25.00	18.00	7.00	6.00	FKM	SUA-821
E07018L520	25.00	18.00	7.50	6.50	PU	PUA-632
E070181133	25.00	18.50	4.50	3.50	NBR	SUA-1656
E07019L505	25.00	19.00	4.00	3.00	PU	PUA-345
E070191125	25.00	19.00	4.00	3.00	NBR	SUA-1336
E070196704	25.00	19.00	4.00	3.00	FKM	SUA-1115
E07019L512	25.00	19.00	5.00	4.00	PU	PUA-539
E07019L504	25.00	19.00	6.00	5.00	PU	PUA-171
E07019L510	25.00	19.00	7.00	6.00	PU	PUA-480
E070196703	25.00	19.00	7.00	6.00	FKM	SUA-1057
E07019L513	25.00	19.00	8.00	7.00	PU	PUA-553
E070191011	25.00	19.80	3.60	2.60	NBR	SUA-2405
E070201152	25.00	20.00	3.50	2.50	NBR	SUA-2447
E070201011	25.00	20.00	3.50	2.50	NBR	SUA-2406
E07020L521	25.00	20.00	4.00	3.00	PU	PUA-587
E07020L531	25.00	20.00	5.60	4.60	PU	PUA-898
E070210901	25.00	21.00	3.80	2.80	NBR	SUA-2167
E070101157	25.40	10.50	6.33	5.33	NBR	SUB-3620
E070151007	25.40	15.87	5.00	4.00	NBR	SUB-1163
E070153401	25.40	15.87	5.76	4.76	EPDM	SUB-1147
E07015L527	25.40	15.87	5.76	4.76	PU	PUB-1097
E070151014	25.40	15.87	5.80	4.80	NBR	SUB-3896
E07015L539	25.40	15.87	7.35	6.35	PU	PUB-2120
E070156601	25.40	15.88	5.76	4.76	FKM	SUB-2753
E070171001	25.40	17.00	7.00	6.00	NBR	SUB-2131
E070176601	25.40	17.50	4.90	3.90	FKM	SUB-1447
E07018L528	25.40	18.50	6.50	5.50	PU	PUB-1636
E07018Q201	25.40	18.60	6.50	5.50	PU	PUB-1762
E070196705	25.40	19.05	4.17	3.17	FKM	SUB-3797
E070191009	25.40	19.05	4.18	3.18	NBR	SUB-1873
E070191110	25.40	19.05	4.20	3.20	NBR	SUB-1275
E07019L506	25.40	19.05	5.76	4.76	PU	PUB-658
E07019L521	25.40	19.05	7.35	6.35	PU	PUB-1633

Bold sizes are readily available in stock.
Other materials are available on request.

E07

Single Acting Symmetrical Seal

MAX SPARE LIMITED
QUALITY. PRECISION. SPEED.

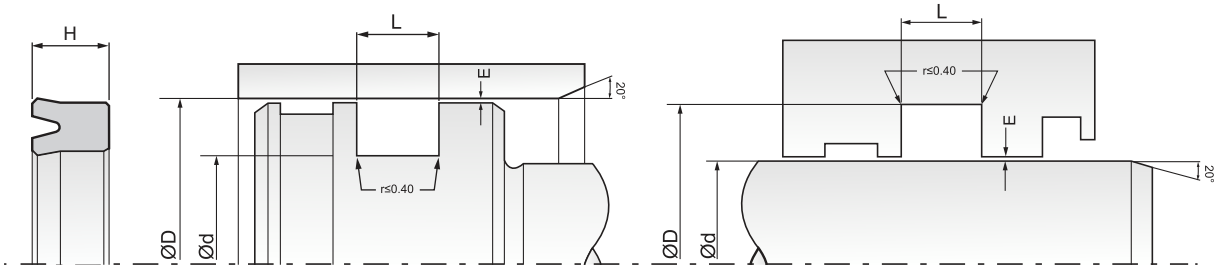

Part No.	D (H10)	d (f8/h9)	L (+0.2)	H	Material	Mould No.
E07018D601	25.42	18.95	4.17	3.17	HNBR	SUB-3967
E070144303	25.50	14.50	9.00	8.00	VMQ	SUB-3707
E070181126	25.50	18.50	4.20	3.20	NBR	SUB-1646
E070176703	25.80	17.80	5.00	4.00	FKM	SUB-1735
E07012L514	26.00	12.00	8.00	7.00	PU	PUB-539
E070121028	26.00	12.00	9.00	8.00	NBR	SUB-2481
E07014L528	26.00	14.00	6.00	5.00	PU	PUB-2121
E070141109	26.00	14.00	6.00	5.00	NBR	SUB-614
E07014L505	26.00	14.00	7.00	6.00	PU	PUB-525
E070141110	26.00	14.00	9.00	8.00	NBR	SUB-3144
E070151135	26.00	15.00	6.00	5.00	NBR	SUB-1950
E070161136	26.00	16.00	6.00	5.00	NBR	SUB-1694
E07016L502	**26.00**	**16.00**	**6.00**	**5.00**	**PU**	**PUB-242**
E07016L502	26.00	16.00	6.00	5.00	PU	PUB-1487
E070161012	26.00	16.00	6.00	5.00	NBR	SUB-4028
E070161146	26.00	16.00	6.50	5.50	NBR	SUB-2425
E070166702	26.00	16.00	6.50	5.50	FKM	SUB-2224
E070161103	26.00	16.00	7.00	6.00	NBR	SUB-3142
E07016L525	26.00	16.00	7.00	6.00	PU	PUB-1559
E07016L527	26.00	16.00	8.00	7.00	PU	PUB-1591
E070161008	26.00	16.00	8.30	7.30	NBR	SUB-3064
E07016L522	**26.00**	**16.00**	**9.00**	**8.00**	**PU**	**PUB-1896**
E07016L526	26.00	16.00	11.00	10.00	PU	PUB-1584
E070161157	26.00	16.00	11.00	10.00	NBR	SUB-3760
E070171110	26.00	17.00	7.00	6.00	NBR	SUB-1550
E070181127	26.00	18.00	4.00	3.00	NBR	SUB-1659
E070181134	26.00	18.00	5.00	4.00	NBR	SUB-2776
E070186702	26.00	18.00	5.00	4.00	FKM	SUB-1172
E07018L523	26.00	18.00	5.00	4.00	PU	PUB-1440
E07018L501	26.00	18.00	6.00	5.00	PU	PUB-1298
E070188701	26.00	18.00	6.00	5.00	PU	PUB-1279
E07018L501	**26.00**	**18.00**	**6.00**	**5.00**	**PU**	**PUB-142**
E070181007	26.00	18.00	6.00	5.00	NBR	SUB-3584
E070183503	26.00	18.00	6.00	5.00	EPDM	SUB-3422
E070181012	26.00	18.00	6.00	5.00	NBR	SUB-3330
E070186601	26.00	18.00	6.10	5.10	FKM	SUB-2286
E07018L515	26.00	18.00	6.40	5.40	PU	PUB-1115
E070181010	26.00	18.00	6.50	5.50	NBR	SUB-1386
E07018L504	**26.00**	**18.00**	**6.50**	**5.50**	**PU**	**PUB-450**
E070186705	26.00	18.00	7.00	6.00	FKM	SUB-1520
E070181132	26.00	18.00	7.00	6.00	NBR	SUB-2543
E070181132	26.00	18.00	7.00	6.00	NBR	SUB-3147
E07018L536	26.00	18.00	7.00	6.00	PU	PUB-1925
E07018L516	26.00	18.00	7.35	6.35	PU	PUB-1118
E07018L510	26.00	18.00	8.00	7.00	PU	PUB-900
E07018L532	26.00	18.00	9.00	8.00	PU	PUB-1739
E07019L523	26.00	19.00	4.20	3.20	PU	PUB-2119
E070191123	26.00	19.00	4.50	3.50	NBR	SUB-1946
E070191126	26.00	19.00	6.00	5.00	NBR	SUB-2343
E070196603	26.00	19.80	5.10	4.10	FKM	SUB-2107
E070201007	26.00	20.00	5.00	4.00	NBR	SUB-3221
E070201126	26.00	20.00	5.00	4.00	NBR	SUB-899

Part No.	D (H10)	d (f8/h9)	L (+0.2)	H	Material	Mould No.
E07020532	26.00	20.00	5.00	4.00	PU	PUB-1704
E07020L510	26.00	20.00	6.00	5.00	PU	PUB-121
E070201140	26.00	20.00	6.00	5.00	NBR	SUB-1739
E070206710	26.00	20.00	6.00	5.00	FKM	SUB-4174
E07020L518	26.00	20.00	7.50	6.50	PU	PUB-1148
E07020L519	26.00	20.00	8.00	7.00	PU	PUB-1196
E07021L501	**26.00**	**21.00**	**6.00**	**5.00**	**PU**	**PUB-449**
E07021L501	26.00	21.00	6.00	5.00	PU	PUB-1414
E070153301	26.04	15.87	6.00	5.00	EPDM	SUB-1419
E07016L506	**26.50**	**16.00**	**9.00**	**8.00**	**PU**	**PUB-372**
E070201148	26.50	20.00	4.00	3.00	NBR	SUB-2718
E07020D501	26.75	20.35	4.10	3.10	HNBR	SUB-2867
E07022L543	26.80	22.00	3.70	2.70	PU	PUB-1616
E07012L519	27.00	12.50	9.00	8.00	PU	PUB-789
E07018L537	27.00	18.00	7.00	6.00	PU	PUB-1933
E07019L501	**27.00**	**19.00**	**6.00**	**5.00**	**PU**	**PUB-448**
E070196602	27.00	19.50	4.20	3.20	FKM	SUB-1515
E070191008	27.00	19.50	6.00	5.00	NBR	SUB-1605
E070206606	27.00	20.00	4.50	3.50	FKM	SUB-2955
E07020L528	27.00	20.00	5.00	4.00	PU	PUB-1557
E070206605	27.00	20.00	6.00	5.00	FKM	SUB-1854
E070203401	27.00	20.00	6.00	5.00	EPDM	SUB-4039
E07022L538	27.00	22.00	5.00	4.00	PU	PUB-1276
E07022L537	27.00	22.00	9.00	8.00	PU	PUB-1243
E070221002	27.60	22.00	4.00	3.00	NBR	SUB-1645
E070200807	27.70	20.00	6.50	5.50	NBR	SUB-2893
E070141105	28.00	14.00	8.00	7.00	NBR	SUB-3145
E070151140	28.00	15.00	11.00	10.00	NBR	SUB-3234
E070161104	28.00	16.00	6.00	5.00	NBR	SUB-3143
E070166704	28.00	16.00	7.00	6.00	FKM	SUB-2377
E070161101	28.00	16.00	7.00	6.00	NBR	SUB-3146
E07016L513	28.00	16.00	9.00	8.00	PU	PUB-806
E070161004	28.00	16.00	9.00	8.00	NBR	SUB-1077
E070161139	28.00	16.00	10.60	9.60	NBR	SUB-1772
E07016L531	28.00	16.00	11.00	10.00	PU	PUB-1785
E070181125	28.00	18.00	5.00	4.00	NBR	SUB-1474
E070181136	28.00	18.00	5.40	4.40	NBR	SUB-3813
E07018L525	28.00	18.00	6.00	5.00	PU	PUB-1526
E07018L514	28.00	18.00	7.00	6.00	PU	PUB-1004
E07018L524	28.00	18.00	8.00	7.00	PU	PUB-1497
E070183501	28.00	18.00	8.00	7.00	EPDM	SUB-644
E07018L530	28.00	18.00	8.00	7.00	PU	PUB-1728
E070181138	28.00	18.00	8.00	7.00	NBR	SUB-3951
E07018L502	**28.00**	**18.00**	**8.30**	**7.30**	**PU**	**PUB-182**
E07018L502	28.00	18.00	8.30	7.30	PU	PUB-1491
E07181011	28.00	18.00	9.00	8.00	NBR	SUB-3198
E07018L526	28.00	18.00	9.00	8.00	PU	PUB-1540
E07018L534	**28.00**	**18.00**	**9.00**	**8.00**	**PU**	**PUB-1897**
E07019L503	**28.00**	**19.00**	**6.70**	**5.70**	**PU**	**PUB-447**
E07019L503	**28.00**	**19.00**	**6.70**	**5.70**	**PU**	**PUB-1320**
E07019L515	28.00	19.00	8.00	7.00	PU	PUB-1239
E070208902	28.00	20.00	4.70	3.70	PU	PUB-871

Bold sizes are readily available in stock.
Other materials are available on request.

E07

Single Acting Symmetrical Seal

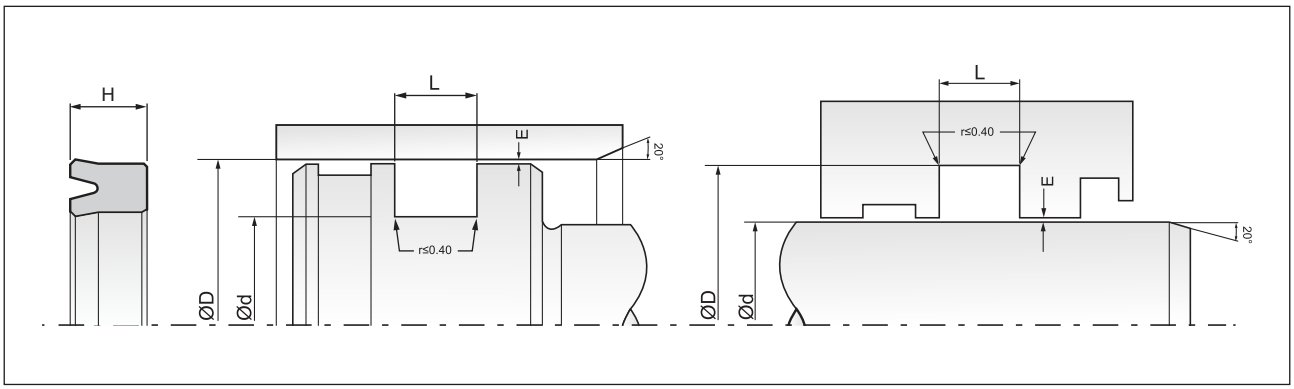

Part No.	D (H10)	d (f8/h9)	L (+0.2)	H	Material	Mould No.
E070206707	28.00	20.00	5.00	4.00	FKM	SUB-1890
E07020L506	28.00	20.00	5.00	4.00	PU	PUB-1116
E070206603	28.00	20.00	5.00	4.00	FKM	SUB-2771
E07020L506	28.00	20.00	5.00	4.00	PU	PUB-424
E070200809	28.00	20.00	5.00	4.00	NBR	SUB-3199
E070203501	28.00	20.00	5.00	4.00	EPDM	SUB-3585
E070208903	28.00	20.00	5.50	4.50	PU	PUB-1827
E070201105	28.00	20.00	5.80	4.80	NBR	SUB-2577
E07020L504	**28.00**	**20.00**	**6.00**	**5.00**	**PU**	**PUB-249**
E070201005	28.00	20.00	6.00	5.00	NBR	SUB-2888
E070206702	28.00	20.00	6.00	5.00	FKM	SUB-3200
E070201103	28.00	20.00	6.00	5.00	NBR	SUB-3308
E07020L404	28.00	20.00	6.00	5.00	PU	PUB-1581
E070200805	28.00	20.00	6.00	5.00	NBR	SUB-821
E070201139	28.00	20.00	6.50	5.50	NBR	SUB-4049
E07020L539	28.00	20.00	6.50	5.50	PU	PUB-1926
E070206711	28.00	20.00	6.50	5.50	FKM	SUB-4182
E070206706	28.00	20.00	6.70	5.70	FKM	SUB-1252
E070206706	28.00	20.00	6.70	5.70	FKM	SUB-1252
E070201150	28.00	20.00	6.70	5.70	NBR	SUB-3774
E07020L537	28.00	20.00	6.70	5.70	PU	PUB-1910
E070201125	28.00	20.00	6.80	5.80	NBR	SUB-2915
E070201006	28.00	20.00	7.00	6.00	NBR	SUB-2449
E07020L501	**28.00**	**20.00**	**7.00**	**6.00**	**PU**	**PUB-289**
E07020U301	28.00	20.00	7.00	6.00	FKM	SUB-3363
E07025L501	28.00	20.00	7.00	6.00	PU	PUB-1486
E070201151	28.00	20.00	7.00	6.00	NBR	SUB-4079
E07020L511	28.00	20.00	7.50	6.50	PU	PUB-815
E07020L515	28.00	20.00	8.30	7.30	PU	PUB-981
E07020L513	28.00	20.00	9.00	8.00	PU	PUB-929
E070201003	28.00	20.00	9.00	8.00	NBR	SUB-2252
E070281102	28.00	20.00	9.00	8.00	NBR	SUB-1048
E07020L522	28.00	20.00	11.00	10.00	PU	PUB-1269
E070221014	28.00	22.00	4.20	3.20	NBR	SUB-4185
E07022L526	28.00	22.00	5.00	4.00	PU	PUB-904
E07022L542	28.00	22.00	5.50	4.50	PU	PUB-1625
E070221106	28.00	22.00	5.50	4.50	NBR	SUB-3661
E070221007	28.00	22.00	6.00	5.00	NBR	SUB-2468
E07022L524	28.00	22.00	7.00	6.00	PU	PUB-878
E070221125	28.00	22.00	7.00	6.00	NBR	SUB-744
E070226611	28.00	22.00	7.00	6.00	FKM	SUB-3806
E07022L513	28.00	22.00	7.50	6.50	PU	PUB-622
E07022L539	28.00	22.00	9.00	8.00	PU	PUB-1499
E07022L533	28.00	22.00	9.10	8.10	PU	PUB-1100
E07022L543	28.00	22.40	6.00	5.00	PU	PUB-1658
E070231002	28.00	23.00	5.00	4.00	NBR	SUB-4207
E07023L503	28.00	23.75	3.70	2.70	PU	PUB-1615
E07020L525	28.10	20.00	6.25	5.25	PU	PUB-1445
E070221151	28.30	22.16	5.00	4.00	NBR	SUB-2035
E070221151	28.30	22.16	5.20	4.20	NBR	SUB-2030
E070221011	28.40	22.80	4.80	3.80	NBR	SUB-3677
E07015L529	28.44	15.74	7.35	6.35	PU	PUB-1537

Part No.	D (H10)	d (f8/h9)	L (+0.2)	H	Material	Mould No.
E070191128	28.50	19.00	6.75	5.75	NBR	SUB-2774
E07022D601	28.55	22.15	4.17	3.17	HNBR	SUB-3966
E070151139	28.57	15.87	7.35	6.35	NBR	SUB-3082
E07015L538	28.57	15.87	10.80	9.80	PU	PUB-2030
E070191007	28.57	19.05	6.65	5.65	NBR	SUB-999
E07022L510	28.57	22.20	8.00	7.00	PU	PUB-571
E07022L542	28.57	22.22	4.12	3.12	PU	PUB-1611
E07019L519	28.58	19.05	8.93	7.93	PU	PUB-1527
E070171002	29.00	17.00	10.00	9.00	NBR	SUB-2373
E070191129	29.00	19.00	6.00	5.00	NBR	SUB-2775
E070201142	29.00	20.00	6.00	5.00	NBR	SUB-1814
E07020L514	29.00	20.00	6.00	5.00	PU	PUB-963
E07022L511	29.00	22.00	4.20	3.20	PU	PUB-575
E070221148	29.00	22.00	4.20	3.20	NBR	SUB-1771
E07022L525	29.00	22.00	6.00	5.00	PU	PUB-881
E07022L527	29.00	22.00	6.60	5.60	PU	PUB-903
E070221153	29.00	22.00	11.00	10.00	NBR	SUB-2325
E070223301	29.80	22.00	4.60	3.60	EPDM	SUB-3310
E070121150	30.00	12.00	10.00	9.00	NBR	SUB-2412
E07014L517	30.00	14.00	6.00	5.00	PU	PUB-1340
E070141137	30.00	14.00	6.00	5.00	NBR	SUB-2517
E070141132	30.00	14.00	9.00	8.00	NBR	SUB-2186
E07014L522	30.00	14.20	8.00	7.00	PU	PUB-1598
E07015L504	**30.00**	**15.00**	**8.00**	**7.00**	**PU**	**PUB-445**
E070151129	30.00	15.00	9.00	8.00	NBR	SUB-1620
E070161119	30.00	16.00	9.00	8.00	NBR	SUB-1602
E070171116	30.00	17.00	8.00	7.00	NBR	SUB-3634
E070176702	30.00	17.00	9.00	8.00	FKM	SUB-1424
E070182L531	30.00	18.00	7.00	6.00	PU	PUB-1735
E07018L511	30.00	18.00	7.50	6.50	PU	PUB-901
E07018L505	**30.00**	**18.00**	**9.00**	**8.00**	**PU**	**PUB-285**
E07018L505	30.00	18.00	9.00	8.00	PU	PUB-1511
E070186605	30.00	18.00	9.00	8.00	FKM	SUB-3814
E07018L517	30.00	18.00	11.00	10.00	PU	PUB-1238
E070186707	30.00	18.00	11.00	10.00	FKM	SUB-1757
E07019L502	**30.00**	**19.00**	**8.00**	**7.00**	**PU**	**PUB-446**
E070206703	30.00	20.00	6.00	5.00	FKM	SUB-1635
E07020L540	30.00	20.00	6.00	5.00	PU	PUB-1953
E070201117	30.00	20.00	6.00	5.00	NBR	SUB-1073
E07020L542	30.00	20.00	6.70	5.70	PU	PUB-1976
E070201104	30.00	20.00	7.00	6.00	NBR	SUB-1521
E07020L508	30.00	20.00	7.00	6.00	PU	PUB-291
E070201008	30.00	20.00	7.00	6.00	NBR	SUB-3225
E07020L403	30.00	20.00	7.00	6.00	PU	PUB-1582
E07020L520	30.00	20.00	7.75	6.75	PU	PUB-1250
E070201116	30.00	20.00	8.00	7.00	NBR	SUB-360
E07020L524	**30.00**	**20.00**	**8.00**	**7.00**	**PU**	**PUB-1346**
E07020L524	**30.00**	**20.00**	**8.00**	**7.00**	**PU**	**PUB-1907**
E07020L516	30.00	20.00	8.30	7.30	PU	PUB-1019
E070206201	30.00	20.00	9.00	8.00	FKM	SUB-2946
E07020L505	**30.00**	**20.00**	**9.00**	**8.00**	**PU**	**PUB-151**
E070201153	30.00	20.00	9.00	8.00	NBR	SUB-4088

Bold sizes are readily available in stock.
Other materials are available on request.

E07

Single Acting Symmetrical Seal

MAX SPARE LIMITED
QUALITY. PRECISION. SPEED.

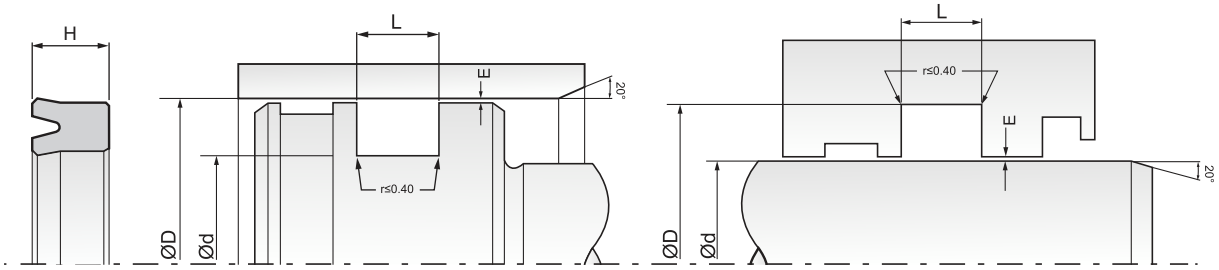

Part No.	D (H10)	d (f8/h9)	L (+0.2)	H	Material	Mould No.
E070201106	30.00	20.00	10.00	9.00	NBR	SUB-3505
E07020L503	**30.00**	**20.00**	**11.00**	**10.00**	**PU**	**PUB-293**
E07020L503	30.00	20.00	11.00	10.00	PU	PUB-1492
E070200901	30.00	20.00	11.00	10.00	NBR	SUB-3756
E07021L502	30.00	21.00	6.70	5.70	PU	PUB-520
E070212301	30.00	21.00	8.00	7.00	CR	SUB-3637
E07022L529	30.00	22.00	5.50	4.50	PU	PUB-979
E070221146	30.00	22.00	5.50	4.50	NBR	SUB-1523
E070226711	30.00	22.00	5.50	4.50	FKM	SUB-4220
E070226705	30.00	22.00	6.00	5.00	FKM	SUB-2230
E070223201	30.00	22.00	6.00	5.00	EPDM	SUB-2019
E07022L517	**30.00**	**22.00**	**6.00**	**5.00**	**PU**	**PUB-154**
E070221101	30.00	22.00	6.00	5.00	NBR	SUB-3149
E070224301	30.00	22.00	6.50	5.50	VMQ	SUB-2570
E07022L521	30.00	22.00	6.50	5.50	PU	PUB-830
E070226609	30.00	22.00	6.50	5.50	FKM	SUB-3332
E070226703	30.00	22.00	6.70	5.70	FKM	SUB-1396
E070220701	30.00	22.00	7.00	6.00	NBR	SUB-1822
E070226704	30.00	22.00	7.00	6.00	FKM	SUB-1557
E07022L520	30.00	22.00	7.00	6.00	PU	PUB-294
E070220601	30.00	22.00	7.00	6.00	NBR	SUB-2050
E070221102	30.00	22.00	7.00	6.00	NBR	SUB-113
E07022L530	30.00	22.00	7.00	6.00	PU	PUB-1618
E07022L546	30.00	22.00	7.50	6.50	PU	PUB-1752
E07022CG01	30.00	22.00	7.80	6.80	PU	PUB-1763
E07022L541	30.00	22.00	8.00	7.00	PU	PUB-1542
E070221124	30.00	22.00	8.00	7.00	NBR	SUB-987
E070221152	30.00	22.00	8.50	7.50	NBR	SUB-2037
E070228904	30.00	22.00	8.50	7.50	PU	PUB-1351
E070226608	30.00	22.00	9.00	8.00	FKM	SUB-3103
E070221157	30.00	22.00	9.00	8.00	NBR	SUB-4077
E070221158	30.00	22.00	11.00	10.00	NBR	SUB-4090
E070221113	30.00	22.40	6.00	5.00	NBR	SUB-1337
E07022L512	30.00	22.40	6.00	5.00	PU	PUB-599
E070226708	30.00	22.40	6.00	5.00	FKM	SUB-3335
E07022L522	30.00	22.40	6.50	5.50	PU	PUB-863
E07022L532	30.00	22.40	6.70	5.70	PU	PUB-1091
E070221010	30.00	22.50	6.00	5.00	NBR	SUB-2816
E070236703	30.00	23.00	7.00	6.00	FKM	SUB-2323
E07023L501	30.00	23.00	7.50	6.50	PU	PUB-656
E07024L510	30.00	24.00	6.00	5.00	PU	PUB-879
E070241125	30.00	24.00	6.50	5.50	NBR	SUB-1889
E07025L520	30.00	25.00	5.00	4.00	PU	PUB-600
E070251123	30.00	25.00	8.00	7.00	NBR	SUB-1500
E07025L502	30.00	25.00	9.00	8.00	PU	PUB-1024
E070221006	30.14	22.22	5.50	4.50	NBR	SUB-2387
E070231103	30.20	23.80	4.17	3.17	NBR	SUB-2545
E07024U201	30.30	24.20	11.00	10.00	FKM	SUB-3525
E07022L534	30.40	22.40	6.00	5.00	PU	PUB-1199
E070226607	30.70	22.00	5.00	4.00	FKM	SUB-2908
E070151011	31.00	15.00	8.60	7.60	NBR	SUB-2689
E07020L541	31.00	20.00	7.00	6.00	PU	PUB-1958

Part No.	D (H10)	d (f8/h9)	L (+0.2)	H	Material	Mould No.
E070201146	31.00	20.00	9.00	8.00	NBR	SUB-2358
E070211108	31.00	21.00	6.00	5.00	NBR	SUB-1568
E07022L531	31.00	22.00	6.00	5.00	PU	PUB-991
E070246603	31.00	24.00	6.00	5.00	FKM	SUB-2945
E070241106	31.00	24.00	6.50	5.50	NBR	SUB-4176
E07025L545	31.00	25.00	6.00	5.00	PU	PUB-1549
E070251171	31.00	25.00	6.00	5.00	NBR	SUB-3386
E07025L530	31.00	25.00	7.00	6.00	PU	PUB-304
E07025L553	31.00	25.00	9.00	8.00	PU	PUB-1684
E07025115	31.00	25.40	5.25	4.25	NBR	SUB-2169
E070266601	31.00	26.50	10.50	9.50	FKM	SUB-2055
E070231101	31.50	23.00	7.00	6.00	NBR	SUB-2195
E070231104	31.50	23.00	7.50	6.50	NBR	SUB-3314
E070231001	31.50	23.40	7.00	6.00	NBR	SUB-3753
E070256615	31.50	25.40	9.50	8.50	FKM	SUB-3014
E070251170	31.70	25.40	7.30	6.30	NBR	SUB-3279
E07015L520	31.75	15.00	11.00	10.00	PU	PUB-594
E07019L509	31.75	19.05	7.35	6.35	PU	PUB-921
E070191010	31.75	19.05	7.35	6.35	NBR	SUB-3626
E070191130	31.75	19.05	7.35	6.35	NBR	SUB-3762
E070196301	31.75	19.05	8.11	7.11	FKM	SUB-4025
E070190802	31.75	19.05	8.93	7.93	NBR	SUB-1848
E07019L514	31.75	19.05	10.52	9.52	PU	PUB-1209
E070226710	31.75	22.22	5.76	4.76	FKM	SUB-3864
E070221013	31.75	22.23	5.78	4.78	NBR	SUB-4054
E070256201	31.75	25.40	4.00	3.00	FKM	SUB-3997
E07025L518	31.75	25.40	5.20	4.20	PU	PUB-569
E070256623	31.75	25.40	5.74	4.74	FKM	SUB-3744
E070266603	31.90	26.50	6.00	5.00	FKM	SUB-2128
E070101146	32.00	10.00	11.00	10.00	NBR	SUB-1933
E070151107	32.00	15.00	8.00	7.00	NBR	SUB-3575
E070161151	32.00	16.00	7.00	6.00	NBR	SUB-2880
E070161153	32.00	16.00	9.00	8.00	NBR	SUB-3244
E07016L507	32.00	16.00	12.00	11.00	PU	PUB-518
E070181129	32.00	18.00	7.00	6.00	NBR	SUB-1800
E070181103	32.00	18.00	9.00	8.00	NBR	SUB-3431
E070183502	32.00	18.00	11.00	10.00	EPDM	SUB-1483
E07019L518	32.00	19.00	7.50	6.50	PU	PUB-1341
E070196604	32.00	19.00	8.00	7.00	FKM	SUB-2964
E07019L508	32.00	19.00	9.00	8.00	PU	PUB-886
E070200806	32.00	20.00	7.00	6.00	NBR	SUB-2811
E07020L529	32.00	20.00	8.00	7.00	PU	PUB-1627
E070206708	32.00	20.00	8.00	7.00	FKM	SUB-4023
E070201009	32.00	20.00	8.30	7.30	NBR	SUB-1049
E07020L530	32.00	20.00	9.00	8.00	PU	PUB-1646
E070201108	32.00	20.00	9.00	8.00	NBR	SUB-3552
E070201105	32.00	20.00	9.00	8.00	NBR	SUB-624
E070201107	32.00	20.00	11.00	10.00	NBR	SUB-3507
E07020L533	32.00	20.00	12.00	11.00	PU	PUB-1786
E070211101	32.00	21.00	11.00	10.00	NBR	SUB-2248
E070226707	32.00	22.00	6.00	5.00	FKM	SUB-2572
E070221145	32.00	22.00	6.00	5.00	NBR	SUB-1508

Bold sizes are readily available in stock.
Other materials are available on request.

E07

Single Acting Symmetrical Seal

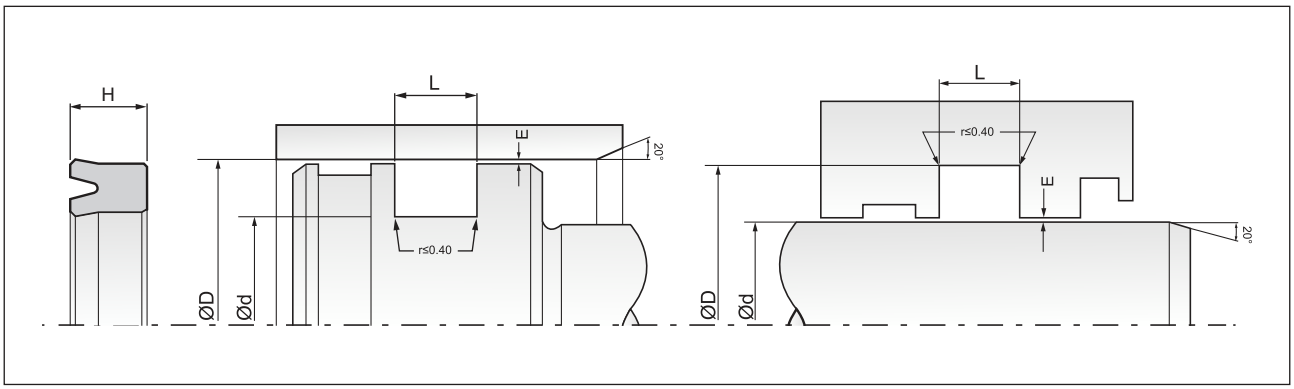

Part No.	D (H10)	d (f8/h9)	L (+0.2)	H	Material	Mould No.
E070223402	32.00	22.00	6.00	5.00	EPDM	SUB-3135
E07022L540	32.00	22.00	6.50	5.50	PU	PUB-1524
E070221103	32.00	22.00	7.00	6.00	NBR	SUB-3148
E070221154	32.00	22.00	8.00	7.00	NBR	SUB-2596
E07022L518	32.00	22.00	8.00	7.00	PU	PUB-296
E07022L501	**32.00**	**22.00**	**8.30**	**7.30**	**PU**	**PUB-152**
E070226605	32.00	22.00	9.00	8.00	FKM	SUB-1374
E07022L504	**32.00**	**22.00**	**9.00**	**8.00**	**PU**	**PUB-441**
E070221105	32.00	22.00	9.00	8.00	NBR	SUB-3150
E070228903	32.00	22.00	10.00	9.00	PU	PUB-832
E07022L528	32.00	22.00	10.70	9.70	PU	PUB-973
E07022L547	32.00	22.00	11.00	10.00	PU	PUB-1781
E070231102	32.00	23.00	6.00	5.00	NBR	SUB-1164
E070231105	32.00	23.00	6.00	5.00	NBR	SUB-3535
E070246602	32.00	24.00	4.00	3.00	FKM	SUB-2339
E07024L518	32.00	24.00	4.00	3.00	PU	PUB-1794
E070246601	32.00	24.00	5.00	4.00	FKM	SUB-1762
E070241005	32.00	24.00	5.00	4.00	NBR	SUB-3457
E070241101	32.00	24.00	5.00	4.00	NBR	SUB-3154
E070241105	32.00	24.00	6.00	5.00	NBR	SUB-1839
E070246704	32.00	24.00	6.00	5.00	FKM	SUB-2905
E070241105	32.00	24.00	6.00	5.00	NBR	SUB-1020
E07024L516	32.00	24.00	6.00	5.00	PU	PUB-1558
E070241128	32.00	24.00	6.00	5.00	NBR	SUB-4080
E070241126	32.00	24.00	6.30	5.30	NBR	SUB-2933
E070241104	32.00	24.00	6.50	5.50	NBR	SUB-286
E07024L514	32.00	24.00	6.50	5.50	PU	PUB-1223
E07024L504	**32.00**	**24.00**	**6.70**	**5.70**	**PU**	**PUB-442**
E07024L504	32.00	24.00	6.70	5.70	PU	PUB-1756
E070241112	32.00	24.00	7.00	6.00	NBR	SUB-2904
E07024L517	32.00	24.00	7.00	6.00	PU	PUB-1626
E070241129	32.00	24.00	7.00	6.00	NBR	SUB-4081
E07024L507	32.00	24.00	8.00	7.00	PU	PUB-791
E070246701	32.00	24.00	9.00	8.00	FKM	SUB-1747
E07024L511	32.00	24.00	9.00	8.00	PU	PUB-1039
E070248901	32.00	24.80	5.30	4.30	PU	PUB-1508
E07025L544	32.00	25.00	4.50	3.50	PU	PUB-1543
E070251105	32.00	25.00	5.00	4.00	NBR	SUB-3151
E07025L560	32.00	25.00	5.00	4.00	PU	PUB-1885
E070251019	32.00	25.00	6.00	5.00	NBR	SUB-1388
E07025L556	32.00	25.00	6.00	5.00	PU	PUB-1764
E070256617	32.00	25.00	7.00	6.00	FKM	SUB-3365
E070251157	32.00	25.00	7.50	6.50	NBR	SUB-1751
E07025L539	32.00	25.00	7.80	6.80	PU	PUB-1312
E07025L529	32.00	25.00	8.00	7.00	PU	PUB-918
E070250902.	32.00	25.00	8.00	7.00	NBR	SUB-3932
E070251167	32.00	25.00	9.00	8.00	NBR	SUB-3233
E07025L554	32.00	25.00	9.00	8.00	PU	PUB-1729
E070256611	32.00	25.70	7.00	6.00	FKM	SUB-2056
E070261110	32.00	26.00	4.00	3.00	NBR	SUB-1896
E070266401	32.00	26.00	4.00	3.00	FKM	SUB-3758
E070261003	32.00	26.00	5.50	4.50	NBR	SUB-3110

Part No.	D (H10)	d (f8/h9)	L (+0.2)	H	Material	Mould No.
E07026L502	32.00	26.00	5.80	4.80	PU	PUB-670
E07054L502	32.00	26.00	8.00	7.00	PU	PUB-1190
E070271115	32.00	27.00	7.00	6.00	NBR	SUB-2090
E07028L529	32.00	28.00	5.00	4.00	PU	PUB-1468
E07028L525	32.00	28.00	10.00	9.00	PU	PUB-1345
E07022L514	32.50	22.00	8.50	7.50	PU	PUB-644
E070226601	32.50	22.50	6.00	5.00	FKM	SUB-2182
E070236702	32.50	23.70	5.00	4.00	FKM	SUB-1425
E07020L517	33.00	20.00	7.00	6.00	PU	PUB-1062
E070201128	33.00	20.00	7.00	6.00	NBR	SUB-3823
E070200803	33.00	20.00	9.00	8.00	NBR	SUB-2569
E07020L502	33.00	20.00	9.00	8.00	PU	PUB-1025
E07020L527	33.00	20.00	11.00	10.00	PU	PUB-1554
E070221149	33.00	22.00	8.00	7.00	NBR	SUB-1974
E07022L555	33.00	22.00	9.00	8.00	PU	PUB-2107
E07022L552	33.00	22.00	11.00	10.00	PU	PUB-1977
E07023L502	33.00	23.00	6.00	5.00	PU	PUB-674
E070246702	33.00	24.00	7.00	6.00	FKM	SUB-1996
E070240803	33.00	24.00	11.00	10.00	NBR	SUB-1573
E070256620	33.00	25.00	5.30	4.30	FKM	SUB-3690
E07025L540	33.00	25.00	5.50	4.50	PU	PUB-1323
E07025L507	33.00	25.00	6.00	5.00	PU	PUB-1308
E070250902	33.00	25.00	6.00	5.00	NBR	SUB-2963
E07025L507	**33.00**	**25.00**	**6.00**	**5.00**	**PU**	**PUB-207**
E070251178	33.00	25.00	6.00	5.00	NBR	SUB-4082
E070250806	33.00	25.00	6.10	5.10	NBR	SUB-1597
E070256613	33.00	25.00	6.16	5.16	FKM	SUB-2480
E070251022	33.00	25.00	6.20	5.20	NBR	SUB-3476
E07025L555	33.00	25.00	6.50	5.50	PU	PUB-1761
E07025L534	33.00	25.00	6.70	5.70	PU	PUB-1114
E07025L561	33.00	25.00	6.70	5.70	PU	PUB-1909
E07025L505	**33.00**	**25.00**	**6.80**	**5.80**	**PU**	**PUB-364**
E07025L519	33.00	25.00	6.80	5.80	PU	PUB-573
E070251113	33.00	25.00	6.80	5.80	NBR	SUB-2916
E07025L533	**33.00**	**25.00**	**7.00**	**6.00**	**PU**	**PUB-1088**
E070251168	33.00	25.00	7.00	6.00	NBR	SUB-3262
E070251179	33.00	25.00	7.00	6.00	NBR	SUB-4083
E07025L537	33.00	25.00	8.00	7.00	PU	PUB-1244
E070251119	33.00	25.00	8.00	7.00	NBR	SUB-103
E07025L503	**33.00**	**25.00**	**9.00**	**8.00**	**PU**	**PUB-394**
E070251160	33.00	25.00	9.00	8.00	NBR	SUB-2244
E07025L503	33.00	25.00	9.00	8.00	PU	PUB-1488
E070256625	33.00	25.00	9.00	8.00	FKM	SUB-4052
E070251180	33.00	25.00	9.00	8.00	NBR	SUB-4084
E070251153	33.00	25.00	13.00	12.00	NBR	SUB-1603
E070251155	33.00	25.40	5.50	4.50	NBR	SUB-1650
E07026L508	33.00	26.00	6.00	5.00	PU	PUB-1578
E07027L504	33.00	27.66	5.00	4.00	PU	PUB-684
E070260901	33.32	26.97	4.96	3.96	NBR	SUB-1658
E070251157	33.33	25.40	4.17	3.17	NBR	SUB-1797
E070256723	33.33	25.40	4.96	3.96	FKM	SUB-3790
E07025L536	33.33	25.40	6.70	5.70	PU	PUB-1224

Bold sizes are readily available in stock.
Other materials are available on request.

E07

Single Acting Symmetrical Seal

MAX SPARE LIMITED
QUALITY. PRECISION. SPEED.

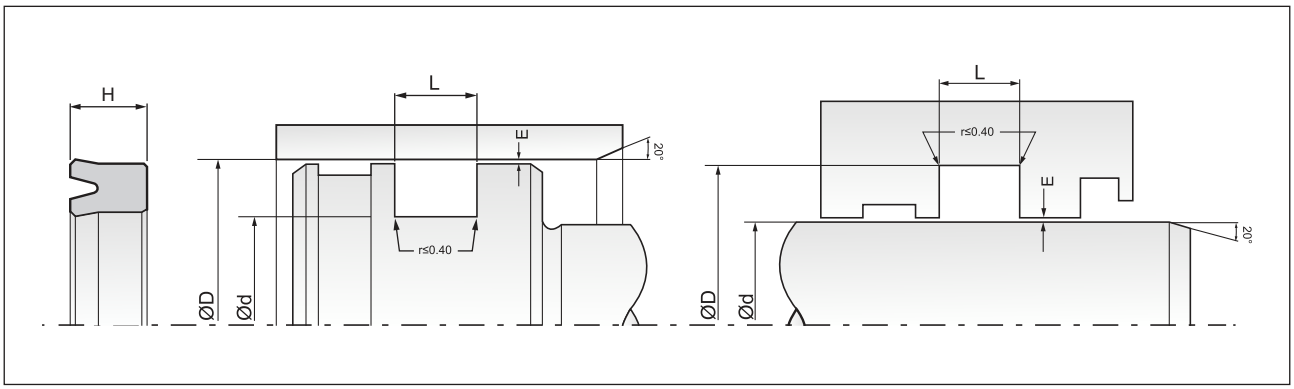

Part No.	D (H10)	d (f8/h9)	L (+0.2)	H	Material	Mould No.
E070251174	33.40	25.40	7.20	6.20	NBR	SUB-3697
E07025L521	33.50	25.40	5.50	4.50	PU	PUB-604
E07025L559	33.50	25.40	5.50	4.50	PU	PUB-1865
E070261108	33.50	26.00	7.50	6.50	NBR	SUB-1446
E070261108	33.50	26.00	7.50	6.50	NBR	PUB-485
E07025L517	33.90	25.40	5.60	4.60	PU	PUB-535
E070121155	34.00	12.00	11.00	10.00	NBR	SUB-3674
E07018L507	34.00	18.00	9.00	8.00	PU	PUB-553
E07018L508	34.00	18.00	11.00	10.00	PU	PUB-608
E070191124	34.00	19.00	9.00	8.00	NBR	SUB-1992
E07019L522	34.00	19.00	9.00	8.00	PU	PUB-1945
E070201144	34.00	20.00	7.00	6.00	NBR	SUB-1913
E07020L523	34.00	20.00	10.00	9.00	PU	PUB-1342
E07022L545	34.00	22.00	7.00	6.00	PU	PUB-1722
E07022L535	34.00	22.00	9.00	8.00	PU	PUB-1204
E070221001	34.00	22.00	11.20	10.20	NBR	SUB-1627
E07024L513	34.00	24.00	5.60	4.60	PU	PUB-1136
E070246604	34.00	24.00	7.30	6.30	FKM	SUB-4045
E07024L509	34.00	24.00	9.00	8.00	PU	PUB-870
E07024L506	34.00	24.50	6.00	5.00	PU	PUB-721
E07025L550	34.00	25.00	6.00	5.00	PU	PUB-1622
E070256705	34.00	25.00	7.00	6.00	FKM	SUB-3501
E07025L542	34.00	25.00	7.00	6.00	PU	PUB-1465
E07025L548	34.00	25.00	8.00	7.00	PU	PUB-1592
E07025L528	34.00	25.00	9.00	8.00	PU	PUB-869
E07026L505	34.00	26.00	5.00	4.00	PU	PUB-229
E070261002	34.00	26.00	6.00	5.00	NBR	SUB-3063
E07026L504	34.00	26.00	7.00	6.00	PU	PUB-1215
E07026L507	34.00	26.00	8.00	7.00	PU	PUB-1562
E070271114	34.00	27.00	9.00	8.00	NBR	SUB-2046
E07028L534	34.00	28.00	4.50	3.50	PU	PUB-1574
E070286605	34.00	28.00	5.00	4.00	FKM	SUB-2008
E070281139	34.00	28.00	6.00	5.00	NBR	SUB-1856
E070281138	34.20	28.10	4.50	3.50	NBR	SUB-1853
E07022L507	34.92	22.22	7.35	6.35	PU	PUB-825
E07025L549	34.92	25.40	5.67	4.67	PU	PUB-1610
E070251152	34.92	25.40	6.55	5.55	NBR	SUB-1553
E070151008	35.00	15.00	12.00	11.00	NBR	SUB-1846
E070151006	35.00	15.00	16.00	15.00	NBR	SUB-3950
E07017L505	35.00	17.00	11.00	10.00	PU	PUB-673
E070181128	35.00	18.00	13.00	12.00	NBR	SUB-1661
E070201145	35.00	20.00	6.00	5.00	NBR	SUB-2085
E07020L512	35.00	20.00	9.70	8.70	PU	PUB-888
E070206705	35.00	20.00	11.00	10.00	FKM	SUB-2038
E070201154	35.00	20.00	11.00	10.00	NBR	SUB-4089
E07022L549	35.00	22.00	6.00	5.00	PU	PUB-1817
E070221123	35.00	22.00	7.00	6.00	NBR	SUB-522
E07022L506	**35.00**	**22.00**	**8.00**	**7.00**	**PU**	**PUB-299**
E07022L508	35.00	22.00	11.00	10.00	PU	PUB-106
E070226709	35.00	22.00	11.00	10.00	FKM	SUB-3668
E070221150	35.00	22.30	7.00	6.00	NBR	SUB-1997
E070221147	35.00	22.80	7.80	6.80	NBR	SUB-1579

Part No.	D (H10)	d (f8/h9)	L (+0.2)	H	Material	Mould No.
E070241003	35.00	24.00	6.00	5.00	NBR	SUB-3904
E070241127	35.00	24.00	8.00	7.00	NBR	SUB-4071
E070251132	35.00	25.00	6.00	5.00	NBR	SUB-2694
E070253901	35.00	25.00	6.00	5.00	VMQ	SUB-2484
E070251106	35.00	25.00	6.00	5.00	NBR	SUB-1225
E07025L515	35.00	25.00	6.00	5.00	PU	PUB-305
E070256619	35.00	25.00	6.00	5.00	FKM	SUB-3642
E07025L551	35.00	25.00	6.80	5.80	PU	PUB-1647
E07025L401	35.00	25.00	6.90	5.90	PU	PUB-1551
E07025L514	**35.00**	**25.00**	**7.00**	**6.00**	**PU**	**PUB-341**
E070251103	35.00	25.00	7.00	6.00	NBR	SUB-1060
E07025L506	**35.00**	**25.00**	**8.00**	**7.00**	**PU**	**PUB-547**
E070251112	35.00	25.00	8.00	7.00	NBR	SUB-1430
E070251112	35.00	25.00	8.00	7.00	NBR	SUB-1263
E070256702	35.00	25.00	8.00	7.00	FKM	SUB-1606
E070251181	35.00	25.00	8.00	7.00	NBR	SUB-4085
E070251158	35.00	25.00	8.00	7.00	NBR	SUB-1883
E07025L547	**35.00**	**25.00**	**8.30**	**7.30**	**PU**	**PUB-1572**
E07025L504	**35.00**	**25.00**	**9.00**	**8.00**	**PU**	**PUB-163**
E070250805	35.00	25.00	9.00	8.00	NBR	SUB-1434
E070256610	35.00	25.00	9.00	8.00	FKM	SUB-1454
E070256709	35.00	25.00	9.00	8.00	FKM	SUB-3743
E070251182	35.00	25.00	11.00	10.00	NBR	SUB-4091
E07025L535	35.00	25.00	11.50	10.50	PU	PUB-1201
E070261109	35.00	26.00	9.00	8.00	NBR	SUB-1580
E070271107	35.00	27.00	4.00	3.00	NBR	SUB-1193
E07027L507	35.00	27.00	4.50	3.50	PU	PUB-1256
E070276601	35.00	27.00	4.50	3.50	FKM	SUB-2594
E07027L505	**35.00**	**27.00**	**6.00**	**5.00**	**PU**	**PUB-271**
E070271005	35.00	27.00	6.00	5.00	NBR	SUB-3371
Z07027L509	35.00	27.00	7.00	6.00	PU	PUB-1621
E07027L506	35.00	27.00	9.00	8.00	PU	PUB-1092
E07027L508	35.00	27.00	11.00	10.00	PU	PUB-1571
E070281145	35.00	28.00	4.00	3.00	NBR	SUB-2587
E070286611	35.00	28.00	4.50	3.50	FKM	SUB-4188
E070286707	35.00	28.00	6.00	5.00	FKM	SUB-1563
E070281135	35.00	28.00	6.00	5.00	NBR	SUB-1526
E07028L513	35.00	28.00	7.00	6.00	PU	PUB-718
E070281150	35.00	28.00	7.00	6.00	NBR	SUB-4145
E070281149	35.00	28.00	7.00	6.00	NBR	SUB-3682
E07028L516	35.00	28.00	8.00	7.00	PU	PUB-882
E07028L522	35.00	28.00	11.00	10.00	PU	PUB-1212
E070281136	35.00	28.50	3.50	2.50	NBR	SUB-1592
E07028L535	**35.00**	**28.50**	**6.00**	**5.00**	**PU**	**PUB-1899**
E07029L503	35.00	29.00	8.00	7.00	PU	PUB-1193
E07029L504	35.00	29.30	5.50	4.50	PU	PUB-1973
E07030L551	35.00	30.00	7.00	6.00	PU	PUB-1759
E07030L552	35.00	30.00	9.00	8.00	PU	PUB-1758
E070221156	35.20	22.50	8.55	7.55	NBR	SUB-3660
E070221155	35.40	22.40	11.00	10.00	NBR	SUB-3321
E07025D601	35.50	25.00	8.00	7.00	HNBR	SUB-3968
E07028L502	**35.50**	**28.00**	**6.00**	**5.00**	**PU**	**PUB-278**

Bold sizes are readily available in stock.
Other materials are available on request.

E07

Single Acting Symmetrical Seal

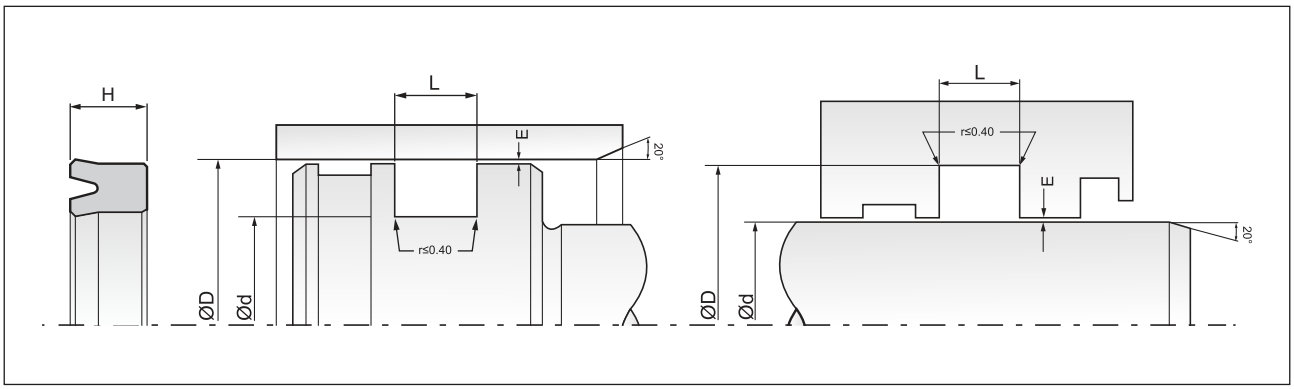

Part No.	D (H10)	d (f8/h9)	L (+0.2)	H	Material	Mould No.
E070281005	35.50	28.00	6.00	5.00	NBR	SUB-1497
E070281107	35.50	28.00	6.00	5.00	NBR	SUB-3430
E070286711	35.50	28.00	6.00	5.00	FKM	SUB-4203
E070200811	36.00	20.00	9.00	8.00	NBR	SUB-4198
E070226706	36.00	22.00	9.00	8.00	FKM	SUB-2488
E07022L523	36.00	22.00	9.00	8.00	PU	PUB-880
E070221104	36.00	22.00	9.00	8.00	NBR	SUB-3382
E07022L550	36.00	22.50	10.00	9.00	PU	PUB-1864
E07024L503	**36.00**	**24.00**	**7.50**	**6.50**	**PU**	**PUB-443**
E070241004	36.00	24.00	10.60	9.60	NBR	SUB-3915
E070251012	36.00	25.00	7.00	6.00	NBR	SUB-3224
E07025L531	36.00	25.00	7.50	6.50	PU	PUB-227
E070251120	36.00	25.00	7.50	6.50	NBR	SUB-3569
E07025L546	36.00	25.00	8.00	7.00	PU	PUB-1553
E070254501	36.00	25.00	11.00	10.00	VMQ	SUB-1450
E07025L522	36.00	25.00	11.00	10.00	PU	PUB-620
E07025L557	36.00	25.00	11.00	10.00	PU	PUB-1765
E070261114	36.00	26.00	7.00	6.00	NBR	SUB-4137
E070261111	36.00	26.00	8.00	7.00	NBR	SUB-2150
E070261115	36.00	26.00	9.00	8.00	NBR	SUB-4146
E070270801	36.00	27.00	7.00	6.00	NBR	SUB-1458
E07027L510	36.00	27.00	8.30	7.30	PU	PUB-1929
E070281146	36.00	28.00	6.00	5.00	NBR	SUB-2654
E070286709	36.00	28.00	6.00	5.00	FKM	SUB-2621
E07028R302	36.00	28.00	6.00	5.00	PU	PUB-1182
E070286301	36.00	28.00	6.20	5.20	FKM	SUB-2158
E07028L508	**36.00**	**28.00**	**6.40**	**5.40**	**PU**	**PUB-390**
E070286607	36.00	28.00	6.75	5.75	FKM	SUB-2351
E07028L526	36.00	28.00	6.80	5.80	PU	PUB-1347
E070286603	36.00	28.00	7.00	6.00	FKM	SUB-1279
E07028L531	**36.00**	**28.00**	**7.00**	**6.00**	**PU**	**PUB-1541**
E070281143	36.00	28.00	7.00	6.00	NBR	SUB-3157
E070281143	36.00	28.00	7.00	6.00	NBR	SUB-2332
E070281151	36.00	28.00	7.00	6.00	NBR	SUB-4144
E07028L533	36.00	28.00	7.20	6.20	PU	PUB-1569
E070286702	36.00	28.00	7.40	6.40	FKM	SUB-1129
E07028L536	36.00	28.00	8.00	7.00	PU	PUB-1730
E070281152	36.00	28.00	8.00	7.00	NBR	SUB-4143
E07028L506	**36.00**	**28.00**	**9.00**	**8.00**	**PU**	**PUB-444**
E070281137	36.00	28.00	9.00	8.00	NBR	SUB-1651
E070281153	36.00	28.00	9.00	8.00	NBR	SUB-4141
E07030L516	36.00	30.00	4.00	3.00	PU	PUB-1037
E07030L515	36.00	30.00	5.50	4.50	PU	PUB-526
E07030L523	36.00	30.00	6.00	5.00	PU	PUB-651
E07030L548	36.00	30.00	6.00	5.00	PU	PUB-1656
E070301124	36.00	30.00	7.00	6.00	NBR	SUB-2394
E07030L512	36.00	30.00	7.00	6.00	PU	PUB-1605
E070321013	36.00	32.00	4.50	3.50	NBR	SUB-4160
E07026L506	36.44	26.57	7.10	6.10	PU	PUB-1446
E070281001	36.50	28.60	5.00	4.00	NBR	SUB-2307
E070231106	36.51	23.81	7.35	6.35	NBR	SUB-3946
E070301142	36.52	30.16	4.17	3.17	NBR	SUB-1736

Part No.	D (H10)	d (f8/h9)	L (+0.2)	H	Material	Mould No.
E070245901	36.90	24.20	7.51	6.51	PU	PUB-1125
E070245901	36.90	24.20	7.51	6.51	PU	PUB-990
E070251117	37.00	25.00	7.00	6.00	NBR	SUB-4161
E070251017	37.00	25.00	7.50	6.50	NBR	SUB-2233
E070250903	37.00	25.00	8.00	7.00	NBR	SUB-3609
E070250807	37.00	25.00	8.00	7.00	NBR	SUB-1756
E07025L549	37.00	25.00	9.00	8.00	PU	PUB-1623
E07025L516	37.00	25.00	10.00	9.00	PU	PUB-494
E070251163	37.00	25.00	11.00	10.00	NBR	SUB-2874
E07025L558	37.00	25.00	11.00	10.00	PU	PUB-1856
E070254503	37.00	25.00	11.00	10.00	VMQ	SUB-3796
E07026L501	37.00	26.00	11.00	10.00	PU	PUB-564
E070271112	37.00	27.00	5.00	4.00	NBR	SUB-1543
E070306710	37.00	30.00	6.00	5.00	FKM	SUB-2024
E07030L538	37.00	30.00	6.30	5.30	PU	PUB-1336
E07030L533	37.00	30.00	7.00	6.00	PU	PUB-1067
E070306617	37.00	30.00	8.00	7.00	FKM	SUB-4065
E07024L505	37.50	24.60	11.00	10.00	PU	PUB-637
E07018L512	38.00	18.00	7.40	6.40	PU	PUB-922
E070201141	38.00	20.00	9.00	8.00	NBR	SUB-1763
E07022L551	38.00	22.00	9.00	8.00	PU	PUB-1928
E07022L515	38.00	22.00	11.00	10.00	PU	PUB-160
E070251124	38.00	25.00	7.00	6.00	NBR	SUB-276
E07025Q201	38.00	25.00	7.00	6.00	PU	PUB-992
E070251102	38.00	25.00	7.50	6.50	NBR	SUB-2438
E070250901	38.00	25.00	7.50	6.50	NBR	SUB-2669
E070256624	38.00	25.00	7.50	6.50	FKM	SUB-4036
E070250601	38.00	25.00	8.00	7.00	NBR	SUB-1809
E070252202	38.00	25.00	8.00	7.00	CR	SUB-108
E070256703	38.00	25.00	8.00	7.00	FKM	SUB-1695
E07025Q202	38.00	25.00	8.00	7.00	PU	PUB-1294
E07025L538	**38.00**	**25.00**	**8.00**	**7.00**	**PU**	**PUB-1898**
E070251011	38.00	25.00	8.00	7.00	NBR	SUB-3914
E07025L511	**38.00**	**25.00**	**9.00**	**8.00**	**PU**	**PUB-440**
E070251023	38.00	25.00	9.00	8.00	NBR	SUB-3852
E070251183	38.00	25.00	9.00	8.00	NBR	SUB-4092
E07025L508	**38.00**	**25.00**	**10.00**	**9.00**	**PU**	**PUB-439**
E07025L501	38.00	25.00	11.00	10.00	PU	PUB-1164
E07025L501	**38.00**	**25.00**	**11.00**	**10.00**	**PU**	**PUB-129**
E070251176	38.00	25.00	11.00	10.00	NBR	SUB-3757
E070251184	38.00	25.00	11.00	10.00	NBR	SUB-4134
E07025L509	**38.00**	**25.00**	**13.00**	**12.00**	**PU**	**PUB-438**
E07025L509	38.00	25.00	13.00	12.00	PU	PUB-1466
E070260902	38.00	26.00	7.50	6.50	NBR	SUB-2750
E070261112	38.00	26.00	10.50	9.50	NBR	SUB-2573
E070271113	38.00	27.00	11.00	10.00	NBR	SUB-1956
E07028L524	38.00	28.00	5.00	4.00	PU	PUB-1241
E07028L515	38.00	28.00	5.50	4.50	PU	PUB-895
E070281148	38.00	28.00	5.50	4.50	NBR	SUB-3563
E070281103	38.00	28.00	6.00	5.00	NBR	SUB-3153
E070281003	38.00	28.00	6.50	5.50	NBR	SUB-3066
E07028L502	38.00	28.00	6.60	5.60	PU	PUB-943

Bold sizes are readily available in stock.
Other materials are available on request.

E07

Single Acting Symmetrical Seal

MAX SPARE LIMITED
QUALITY. PRECISION. SPEED.

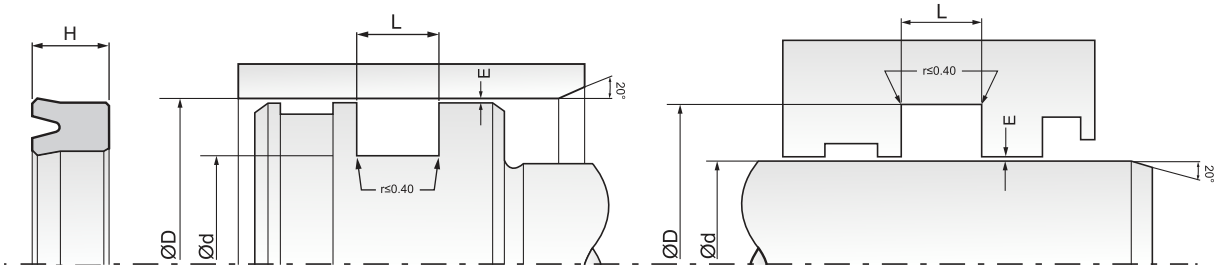

Part No.	D (H10)	d (f8/h9)	L (+0.2)	H	Material	Mould No.
E07028L523	38.00	28.00	7.00	6.00	PU	PUB-1226
E070280802	38.00	28.00	7.00	6.00	NBR	SUB-1178
E070281154	38.00	28.00	7.00	6.00	NBR	SUB-4126
E07028L504	**38.00**	**28.00**	**8.00**	**7.00**	**PU**	**PUB-365**
E070286708	38.00	28.00	8.00	7.00	FKM	SUB-1884
E070286604	38.00	28.00	8.00	7.00	FKM	SUB-2006
E07028L504	38.00	28.00	8.00	7.00	PU	PUB-1490
E070281155	38.00	28.00	8.00	7.00	NBR	SUB-4127
E070286602	38.00	28.00	9.00	8.00	FKM	SUB-1259
E07028L519	38.00	28.00	9.00	8.00	PU	PUB-924
E070281141	38.00	28.00	9.00	8.00	NBR	SUB-1983
E070281156	38.00	28.00	9.00	8.00	NBR	SUB-4128
E070281157	38.00	28.00	11.00	10.00	NBR	SUB-4129
E070281134	38.00	28.00	13.00	12.00	NBR	SUB-1412
E070301106	38.00	30.00	5.00	4.00	NBR	SUB-3155
E07030L521	38.00	30.00	6.00	5.00	PU	PUB-650
E070301160	38.00	30.00	6.00	5.00	NBR	SUB-439
E070301165	38.00	30.00	6.00	5.00	NBR	SUB-4130
E070306713	38.00	30.00	6.50	5.50	FKM	SUB-2357
E07030L507	**38.00**	**30.00**	**6.70**	**5.70**	**PU**	**PUB-387**
E07030L507	38.00	30.00	6.70	5.70	PU	PUB-1505
E070301150	38.00	30.00	7.00	6.00	NBR	SUB-2424
E070306708	38.00	30.00	7.00	6.00	FKM	SUB-1805
E07030L535	**38.00**	**30.00**	**7.00**	**6.00**	**PU**	**PUB-1900**
E070301166	38.00	30.00	7.00	6.00	NBR	SUB-4131
E070301121	38.00	30.00	7.50	6.50	NBR	SUB-421
E07030L517	38.00	30.00	7.50	6.50	PU	PUB-267
E070306707	38.00	30.00	8.00	7.00	FKM	SUB-1641
E07030L506	**38.00**	**30.00**	**8.00**	**7.00**	**PU**	**PUB-386**
E07030L506	38.00	30.00	8.00	7.00	PU	PUB-1502
E070301107	38.00	30.00	8.00	7.00	NBR	SUB-3383
E070301167	38.00	30.00	8.00	7.00	NBR	SUB-4133
E070301105	38.00	30.00	9.00	8.00	NBR	SUB-3152
E07030L518	38.00	30.00	11.00	10.00	PU	PUB-314
E070326604	38.00	32.00	5.00	4.00	FKM	SUB-3184
E07032L546	38.00	32.00	6.00	5.00	PU	PUB-1797
E070321012	38.00	32.00	7.00	6.00	NBR	SUB-3735
E07032L526	38.00	32.60	4.70	3.70	PU	PUB-1098
E070251162	38.10	25.40	7.35	6.35	NBR	SUB-1276
E070251006	38.10	25.40	7.35	6.35	NBR	SUB-2045
E070256402	38.10	25.40	7.80	6.80	FKM	SUB-3996
E070251164	38.10	25.40	10.52	9.52	NBR	SUB-3123
E070281147	38.10	28.44	7.35	6.35	NBR	SUB-3312
E07028L518	38.10	28.57	8.94	7.94	PU	PUB-899
E070301138	38.10	30.10	5.00	4.00	NBR	SUB-1400
E070301158	38.10	30.15	4.96	3.96	NBR	SUB-3504
E070306616	38.10	30.16	4.80	3.80	FKM	SUB-3719
E070303402	38.10	30.16	5.00	4.00	EPDM	SUB-3718
E070316401	38.10	31.75	4.17	3.17	FKM	SUB-1668
E070311108	38.10	31.75	7.35	6.35	NBR	SUB-1653
E070375901	38.10	31.75	7.35	6.35	PU	PUB-1939
E070315901	38.10	31.75	7.35	6.35	PU	PUB-1804

Part No.	D (H10)	d (f8/h9)	L (+0.2)	H	Material	Mould No.
E07031L508	38.10	31.75	10.52	9.52	PU	PUB-1560
E070316702	38.50	31.70	4.30	3.30	FKM	SUB-3530
E070301015	38.75	30.85	8.90	7.90	NBR	SUB-2160
E07020L509	39.00	20.00	11.00	10.00	PU	PUB-574
E070301161	39.00	30.00	6.00	5.00	NBR	SUB-1513
E07030L508	**39.00**	**30.00**	**9.00**	**8.00**	**PU**	**PUB-493**
E07030L547	39.00	30.00	10.50	9.50	PU	PUB-1570
E07032L540	39.00	32.00	9.00	8.00	PU	PUB-1732
E07033L502	39.00	33.00	8.00	7.00	PU	PUB-1195
E07029L502	39.50	29.50	10.00	9.00	PU	PUB-1087
E07031L510	39.50	31.50	6.00	5.00	PU	PUB-2028
E070256602	39.70	25.00	9.00	8.00	FKM	SUB-1725
E070251156	39.92	25.40	7.35	6.35	NBR	SUB-1724
E070161140	40.00	16.00	11.00	10.00	NBR	SUB-1773
E07020L538	40.00	20.00	7.00	6.00	PU	PUB-1912
E070206608	40.00	20.00	8.30	7.30	FKM	SUB-3646
E07020L534	40.00	20.00	9.00	8.00	PU	PUB-1783
E07020L507	**40.00**	**20.00**	**11.00**	**10.00**	**PU**	**PUB-437**
E07020L513	40.00	20.00	13.00	12.00	PU	PUB-1648
E07022L401	40.00	22.00	13.00	12.00	PU	PUB-1782
E07024L501	**40.00**	**24.00**	**9.00**	**8.00**	**PU**	**PUB-303**
E070241111	40.00	24.00	11.00	10.00	NBR	SUB-1207
E070241111	40.00	24.00	11.00	10.00	NBR	SUB-2761
E070251021	40.00	25.00	4.50	3.50	NBR	SUB-3339
E070251151	40.00	25.00	7.00	6.00	NBR	SUB-497
E070251151	40.00	25.00	7.00	6.00	NBR	SUB-1545
E070251129	40.00	25.00	7.00	6.00	NBR	SUB-2245
E070251151	40.00	25.00	7.00	6.00	NBR	SUB-1928
E07025L523	40.00	25.00	8.00	7.00	PU	PUB-647
E07025K201	40.00	25.00	8.00	7.00	FKM	SUB-932
E07025L513	**40.00**	**25.00**	**9.00**	**8.00**	**PU**	**PUB-226**
E070251169	40.00	25.00	9.00	8.00	NBR	SUB-3261
E070251185	40.00	25.00	9.00	8.00	NBR	SUB-4135
E070251010	40.00	25.00	9.80	8.80	NBR	SUB-3981
E070256704	40.00	25.00	11.00	10.00	FKM	SUB-1758
E070251110	40.00	25.00	11.00	10.00	NBR	SUB-1524
E07025L512	**40.00**	**25.00**	**11.00**	**10.00**	**PU**	**PUB-307**
E070252201	40.00	25.00	11.00	10.00	CR	SUB-3284
E070251186	40.00	25.00	11.00	10.00	NBR	SUB-4136
E07025L552	40.00	25.00	12.00	11.00	PU	PUB-1645
E07025L510	**40.00**	**25.00**	**13.00**	**12.00**	**PU**	**PUB-436**
E070271106	40.00	27.00	7.00	6.00	NBR	SUB-1174
E07027L502	40.00	27.00	8.00	7.00	PU	PUB-561
E070271004	40.00	27.00	9.00	8.00	NBR	SUB-318
E07027L501	**40.00**	**27.00**	**11.00**	**10.00**	**PU**	**PUB-471**
E07027L503	40.00	27.00	12.20	11.20	PU	PUB-624
E07028L538	40.00	28.00	6.00	5.00	PU	PUB-1914
E07028L510	40.00	28.00	8.00	7.00	PU	PUB-554
E070280801	40.00	28.00	8.00	7.00	NBR	SUB-1171
E070281106	40.00	28.00	8.00	7.00	NBR	SUB-3432
E07028L501	40.00	28.00	8.30	7.30	PU	PUB-415
E070281144	40.00	28.00	9.00	8.00	NBR	SUB-2348

Bold sizes are readily available in stock.
Other materials are available on request.

E07

Single Acting Symmetrical Seal

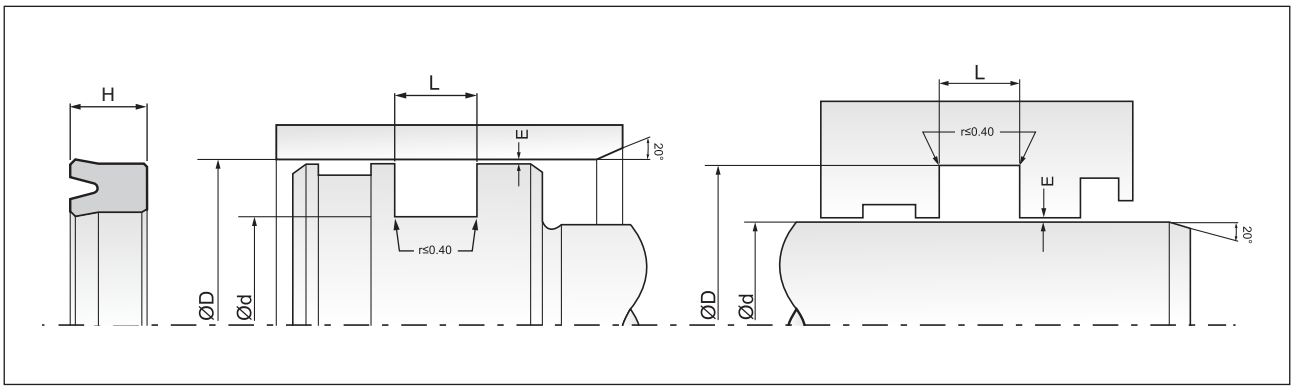

Part No.	D (H10)	d (f8/h9)	L (+0.2)	H	Material	Mould No.
E07028l530	40.00	28.00	9.00	8.00	PU	PUB-1522
E070281105	40.00	28.00	10.00	9.00	NBR	SUB-1189
E07028L503	**40.00**	**28.00**	**11.00**	**10.00**	**PU**	**PUB-103**
E070281002	40.00	28.00	11.00	10.00	NBR	SUB-2794
E07028L503	40.00	28.00	11.00	10.00	PU	PUB-1442
E070306706	40.00	30.00	6.00	5.00	FKM	SUB-1637
E070306612	40.00	30.00	6.00	5.00	FKM	SUB-2461
E070301168	40.00	30.00	6.00	5.00	NBR	SUB-4125
E070301019	40.00	30.00	6.50	5.50	NBR	SUB-2454
E07030L504	40.00	30.00	7.00	6.00	PU	PUB-1165
E07030L504	**40.00**	**30.00**	**7.00**	**6.00**	**PU**	**PUB-133**
E070306701	40.00	30.00	7.00	6.00	FKM	SUB-1672
E070301102	40.00	30.00	7.00	6.00	NBR	SUB-1716
E070301102	40.00	30.00	7.00	6.00	NBR	SUB-3248
E070300802	40.00	30.00	7.00	6.00	NBR	SUB-3953
E070300901	40.00	30.00	7.50	6.50	NBR	SUB-2818
E07030L539	40.00	30.00	7.75	6.75	PU	PUB-1363
E070306711	40.00	30.00	8.00	7.00	FKM	SUB-1155
E07030L505	**40.00**	**30.00**	**8.00**	**7.00**	**PU**	**PUB-385**
E070305913	40.00	30.00	8.00	7.00	PU	PUB-831
E070301155	40.00	30.00	8.00	7.00	NBR	SUB-3114
E070301164	40.00	30.00	8.00	7.00	NBR	SUB-4086
E070308903	40.00	30.00	8.30	7.30	PU	PUB-358
E070306714	40.00	30.00	8.50	7.50	FKM	SUB-3460
E07030L527	**40.00**	**30.00**	**9.00**	**8.00**	**PU**	**PUB-370**
E070306609	40.00	30.00	9.00	8.00	FKM	SUB-1837
E07030L502	**40.00**	**30.00**	**10.00**	**9.00**	**PU**	**PUB-492**
E07030L503	**40.00**	**30.00**	**11.00**	**10.00**	**PU**	**PUB-549**
E070306611	40.00	30.00	11.00	10.00	FKM	SUB-2232
E070301104	40.00	30.00	11.00	10.00	NBR	SUB-480
E070301104	40.00	30.00	11.00	10.00	NBR	SUB-3166
E07030L549	40.00	30.00	11.80	10.80	PU	PUB-1690
E070305909	40.00	30.00	12.00	11.00	PU	PUB-1866
E07030L525	40.00	30.00	13.00	12.00	PU	PUB-708
E070303401	40.00	30.30	8.10	7.10	EPDM	SUB-3512
E070301023	40.00	30.50	7.00	6.00	NBR	SUB-3438
E070310901	40.00	31.00	5.50	4.50	NBR	SUB-3612
E070316701	40.00	31.00	8.50	7.50	FKM	SUB-2204
E07031L502	40.00	31.00	9.00	8.00	PU	PUB-595
E070326707	40.00	32.00	4.00	3.00	FKM	SUB-2098
E07032L522	40.00	32.00	4.00	3.00	PU	PUB-930
E07032L549	40.00	32.00	4.25	3.25	PU	PUB-1883
E07032L541	40.00	32.00	4.30	3.30	PU	PUB-1740
E07032L532	40.00	32.00	4.50	3.50	PU	PUB-1367
E070321120	40.00	32.00	5.00	4.00	NBR	SUB-1683
E070321007	40.00	32.00	5.00	4.00	NBR	SUB-1322
E07032L547	40.00	32.00	5.00	4.00	PU	PUB-1840
E070321008	40.00	32.00	5.50	4.50	NBR	SUB-1566
E070321129	40.00	32.00	6.00	5.00	NBR	SUB-2676
E07032L514	**40.00**	**32.00**	**6.00**	**5.00**	**PU**	**PUB-727**
E070326608	40.00	32.00	6.50	5.50	FKM	SUB-3810
E070321144	40.00	32.00	6.50	5.50	NBR	SUB-4149

Part No.	D (H10)	d (f8/h9)	L (+0.2)	H	Material	Mould No.
E07032L513	**40.00**	**32.00**	**6.80**	**5.80**	**PU**	**PUB-194**
E070321133	40.00	32.00	7.00	6.00	NBR	SUB-3338
E070326602	40.00	32.00	7.00	6.00	FKM	SUB-2393
E070321135	40.00	32.00	7.00	6.00	NBR	SUB-4116
E07032L516	40.00	32.00	7.50	6.50	PU	PUB-816
E07032L528	40.00	32.00	8.00	7.00	PU	PUB-1234
E070321128	40.00	32.00	8.00	7.00	NBR	SUB-2402
E070321136	40.00	32.00	8.00	7.00	NBR	SUB-4117
E07032L501	**40.00**	**32.00**	**9.00**	**8.00**	**PU**	**PUB-470**
E070326606	40.00	32.00	9.00	8.00	FKM	SUB-3300
E070321102	40.00	32.00	9.00	8.00	NBR	SUB-3156
E07032L525	40.00	32.00	11.00	10.00	PU	PUB-1012
E070321137	40.00	32.00	11.00	10.00	NBR	SUB-4118
E07033L504	40.00	33.00	9.00	8.00	PU	PUB-1841
E07034L512	40.00	34.00	9.00	8.00	PU	PUB-1194
E070341016	40.00	34.00	9.00	8.00	NBR	SUB-3573
E07035L542	40.00	35.00	6.00	5.00	PU	PUB-1364
E07035L541	40.00	35.00	8.00	7.00	PU	PUB-1365
E07035L556	40.00	35.00	9.00	8.00	PU	PUB-1787
E070256608	40.70	25.00	7.00	6.00	FKM	SUB-626
E070306704	40.80	30.00	7.00	6.00	FKM	SUB-1426
E07035L521	40.80	35.00	6.50	5.50	PU	PUB-590
E070306401	40.85	30.36	5.00	4.00	FKM	SUB-3832
E070251154	41.00	25.00	11.00	10.00	NBR	SUB-1643
E07028L505	41.00	28.00	11.00	10.00	PU	PUB-188
E070301144	41.00	30.00	9.00	8.00	NBR	SUB-1855
E07031L505	41.00	31.00	7.00	6.00	PU	PUB-1172
E07032L529	41.00	32.00	6.00	5.00	PU	PUB-1253
E07035L536	41.00	35.00	6.00	5.00	PU	PUB-1228
E070251101	41.27	25.40	8.90	7.90	NBR	SUB-2276
E07031L506	41.27	31.75	13.70	12.70	PU	PUB-1496
E07031L507	41.28	31.75	10.52	9.52	PU	PUB-1556
E070311107	41.50	31.50	7.00	6.00	NBR	SUB-1567
E07031L504	41.50	31.50	7.00	6.00	PU	PUB-858
E070318701	41.50	31.50	7.00	6.00	PU	PUB-1278
E07031L501	41.50	31.50	7.00	6.00	PU	PUB-1295
E07031L501	**41.50**	**31.50**	**7.00**	**6.00**	**PU**	**PUB-317**
E070356614	41.50	35.00	7.40	6.40	FKM	SUB-1511
E070221144	42.00	22.00	9.00	8.00	NBR	SUB-1506
E070256612	42.00	25.00	7.00	6.00	FKM	SUB-2175
E070261001	42.00	26.00	9.00	8.00	NBR	SUB-2675
E070271103	42.00	27.00	11.00	10.00	NBR	SUB-2196
E070281109	42.00	28.00	9.00	8.00	NBR	SUB-3592
E07028L532	42.00	28.00	11.00	10.00	PU	PUB-1555
E070281140	42.00	28.50	7.00	6.00	NBR	SUB-1954
E070301143	42.00	30.00	6.00	5.00	NBR	SUB-1852
E07030L544	42.00	30.00	7.00	6.00	PU	PUB-1535
E070301169	42.00	30.00	7.00	6.00	NBR	SUB-4119
E070301103	42.00	30.00	8.00	7.00	NBR	SUB-423
E070301017	42.00	30.00	8.00	7.00	NBR	SUB-2704
E07030L501	42.00	30.00	8.00	7.00	PU	PUB-865
E070301170	42.00	30.00	9.00	8.00	NBR	SUB-4120

Bold sizes are readily available in stock.
Other materials are available on request.

E07

Single Acting Symmetrical Seal

MAX SPARE LIMITED
QUALITY. PRECISION. SPEED.

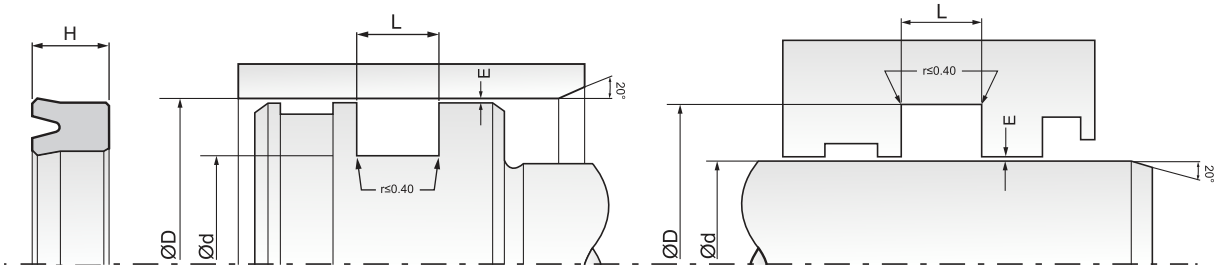

Part No.	D (H10)	d (f8/h9)	L (+0.2)	H	Material	Mould No.
E07030L522	42.00	30.00	10.00	9.00	PU	PUB-172
E070301148	42.00	30.00	11.00	10.00	NBR	SUB-182
E07030L529	42.00	30.00	11.00	10.00	PU	PUB-982
E070301171	42.00	30.00	11.00	10.00	NBR	SUB-4122
E070321125	42.00	32.00	6.00	5.00	NBR	SUB-2129
E070324501	42.00	32.00	6.00	5.00	VMQ	SUB-3905
E07032L502	**42.00**	**32.00**	**6.50**	**5.50**	**PU**	**PUB-469**
E07032L507	**42.00**	**32.00**	**7.00**	**6.00**	**PU**	**PUB-318**
E070321131	42.00	32.00	7.00	6.00	NBR	SUB-2989
E070321103	42.00	32.00	7.00	6.00	NBR	SUB-3160
E070326709	42.00	32.00	7.00	6.00	FKM	SUB-3219
E07032L545	42.00	32.00	7.30	6.30	PU	PUB-1757
E070321117	42.00	32.00	8.00	7.00	NBR	SUB-1897
E070326706	42.00	32.00	8.00	7.00	FKM	SUB-1961
E07032L524	42.00	32.00	8.00	7.00	PU	PUB-247
E070321138	42.00	32.00	8.00	7.00	NBR	SUB-4114
E07032L550	**42.00**	**32.00**	**8.30**	**7.30**	**PU**	**PUB-1901**
E070326603	42.00	32.00	8.50	7.50	FKM	SUB-2650
E07032L521	42.00	32.00	8.80	7.80	PU	PUB-925
E070326705	42.00	32.00	9.00	8.00	FKM	SUB-1908
E07032L527	**42.00**	**32.00**	**9.00**	**8.00**	**PU**	**PUB-1139**
E070321010	42.00	32.00	9.00	8.00	NBR	SUB-3035
E070321139	42.00	32.00	9.00	8.00	NBR	SUB-4111
E070321134	42.00	32.00	9.80	8.80	NBR	SUB-3412
E07032L509	42.00	32.00	10.00	9.00	PU	PUB-585
E07032L531	42.00	32.00	11.00	10.00	PU	PUB-1352
E070321110	42.00	32.00	11.00	10.00	NBR	SUB-1202
E070321140	42.00	32.00	11.00	10.00	NBR	SUB-4112
E070341008	42.00	34.40	5.00	4.00	NBR	SUB-1644
E07036L510	42.00	36.00	9.00	8.00	PU	PUB-1192
E07037L502	42.00	37.05	5.00	4.00	PU	PUB-683
E070341122	42.46	34.92	5.20	4.20	NBR	SUB-1639
E070331101	42.67	33.27	5.75	4.75	NBR	SUB-3830
E0703668301	42.84	36.49	4.17	3.17	FKM	SUB-2407
E070308701	42.86	30.16	7.20	6.20	PU	PUB-1286
E07030L550	42.86	30.16	7.50	6.50	PU	PUB-1713
E070251165	43.00	25.00	11.00	10.00	NBR	SUB-3125
E070271101	43.00	27.00	13.00	12.00	NBR	SUB-2579
E07028L507	**43.00**	**28.00**	**7.00**	**6.00**	**PU**	**PUB-468**
E070301145	43.00	30.00	9.00	8.00	NBR	SUB-1857
E07030L528	43.00	30.00	9.00	8.00	PU	PUB-927
E07030L556	43.00	30.00	9.00	8.00	PU	PUB-2026
E07030L532	43.00	30.00	11.00	10.00	PU	PUB-1054
E070333501	43.00	33.00	6.40	5.40	EPDM	SUB-2064
E07033L503	43.00	33.00	11.00	10.00	PU	PUB-1737
E070346701	43.00	34.00	7.00	6.00	FKM	SUB-2009
E07034L513	43.00	34.00	7.30	6.30	PU	PUB-1309
E07034L501	43.00	34.92	6.60	5.60	PU	PUB-377
E07035L519	43.00	35.00	5.00	4.00	PU	PUB-588
E070351150	43.00	35.00	6.00	5.00	NBR	SUB-4108
E07035L530	43.00	35.00	6.50	5.50	PU	PUB-993
E07035L511	**43.00**	**35.00**	**7.00**	**6.00**	**PU**	**PUB-467**

Part No.	D (H10)	d (f8/h9)	L (+0.2)	H	Material	Mould No.
E070351103	43.00	35.00	7.00	6.00	NBR	SUB-3165
E070351134	43.00	35.00	7.50	6.50	NBR	SUB-1527
E07035L546	43.00	35.00	8.00	7.00	PU	PUB-1620
E070351151	43.00	35.00	8.00	7.00	NBR	SUB-4107
E07035L506	**43.00**	**35.00**	**9.00**	**8.00**	**PU**	**PUB-236**
E070351152	43.00	35.00	9.00	8.00	NBR	SUB-4106
E070356711	43.00	35.00	11.00	10.00	FKM	SUB-2523
E070356713	43.00	35.00	11.00	10.00	FKM	SUB-3208
E070366705	43.00	36.00	9.00	8.00	FKM	SUB-1993
E070251173	44.00	25.00	15.00	14.00	NBR	SUB-3683
E070301162	44.00	30.00	8.00	7.00	NBR	SUB-3858
E070301157	44.00	30.00	10.00	9.00	NBR	SUB-3136
E070322201	44.00	32.00	5.00	4.00	CR	SUB-3621
E070326601	44.00	32.00	8.30	7.30	FKM	SUB-1833
E07032L551	44.00	32.00	9.00	8.00	PU	PUB-1927
E070321101	44.00	32.00	11.00	10.00	NBR	SUB-2578
E07032L536	44.00	32.00	11.00	10.00	PU	PUB-1575
E07032L520	44.00	32.00	13.00	12.00	PU	PUB-897
E07033L501	44.00	33.00	13.00	12.00	PU	PUB-572
E070346501	44.00	34.00	6.00	5.00	FKM	SUB-492
E070346401	44.00	34.00	6.00	5.00	FKM	SUB-3489
E07034L516	44.00	34.00	6.00	5.00	PU	PUB-1525
E070341123	44.00	34.00	7.20	6.20	NBR	SUB-1799
E07034L506	44.00	34.00	9.00	8.00	PU	PUB-805
E07034L505	44.00	34.00	9.50	8.50	PU	PUB-788
E070341124	44.00	34.00	9.50	8.50	NBR	SUB-2092
E070341125	44.00	34.00	11.00	10.00	NBR	SUB-2162
E07034L507	44.00	34.00	11.00	10.00	PU	PUB-902
E07034L504	44.00	34.00	13.00	12.00	PU	PUB-185
E070346602	44.00	34.70	6.50	5.50	FKM	SUB-2781
E07035L548	44.00	35.00	7.00	6.00	PU	PUB-1632
E070351107	44.00	35.00	7.00	6.00	NBR	SUB-3605
E070351136	44.00	35.00	10.00	9.00	NBR	SUB-1790
E07036Q201	44.00	36.00	6.00	5.00	PU	PUB-994
E070361110	44.00	36.00	7.00	6.00	NBR	SUB-1093
E07036L515	44.00	36.00	7.00	6.00	PU	PUB-1736
E07036L511	44.00	36.00	8.50	7.50	PU	PUB-1205
E070366706	44.00	36.00	9.00	8.00	FKM	SUB-2000
E07019L517	44.45	19.05	12.09	11.09	PU	PUB-1315
E070251015	44.45	25.40	10.52	9.52	NBR	SUB-2406
E07029L501	44.45	29.98	10.91	9.91	PU	PUB-538
E070316402	44.45	31.75	7.35	6.35	FKM	SUB-1906
E070311109	44.45	31.75	7.35	6.35	NBR	SUB-3993
E07031L509	44.45	31.75	7.35	6.35	PU	PUB-1923
E07032L523	44.45	32.00	10.00	9.00	PU	PUB-995
E070326708	44.45	32.92	8.93	7.93	FKM	SUB-2257
E07034L519	44.45	34.92	5.74	4.74	PU	PUB-1659
E07034L521	44.45	34.92	5.76	4.76	PU	PUB-1733
E070341126	44.45	34.92	7.35	6.35	NBR	SUB-2271
E070340801	44.45	34.93	5.76	4.76	NBR	SUB-2542
E070381126	44.45	38.10	5.45	4.45	NBR	SUB-1560
E07041K301	44.45	41.27	3.79	2.79	HYT	PUB-1568

Bold sizes are readily available in stock.
Other materials are available on request.

E07

Single Acting Symmetrical Seal

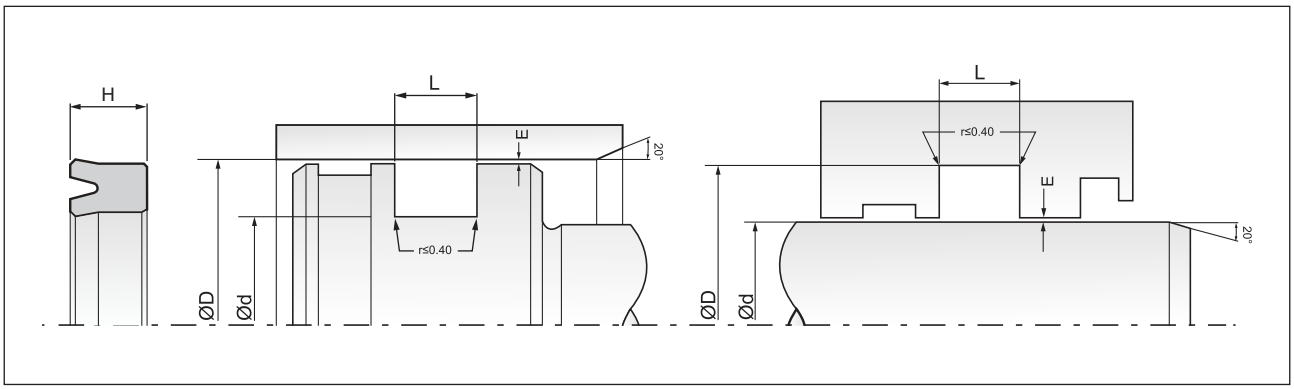

Part No.	D (H10)	d (f8/h9)	L (+0.2)	H	Material	Mould No.
E070174302	45.00	17.50	18.20	17.20	VMQ	SUB-2824
E07022L505	**45.00**	**22.00**	**11.00**	**10.00**	**PU**	**PUB-466**
E07025L527	45.00	25.00	7.00	6.00	PU	PUB-817
E07025L543	45.00	25.00	9.00	8.00	PU	PUB-1531
E07025L526	**45.00**	**25.00**	**11.00**	**10.00**	**PU**	**PUB-818**
E070251166	45.00	25.00	11.00	10.00	NBR	SUB-3126
E070251150	45.00	25.00	13.00	12.00	NBR	SUB-1504
E070281104	45.00	28.00	11.00	10.00	NBR	SUB-3201
E07028L528	45.00	28.00	12.80	11.80	PU	PUB-1426
E070286609	45.00	28.00	13.00	12.00	FKM	SUB-3115
E070291101	45.00	29.00	9.00	8.00	NBR	SUB-3474
E070306615	45.00	30.00	7.00	6.00	FKM	SUB-3003
E07030L543	45.00	30.00	7.00	6.00	PU	PUB-1482
E070301109	45.00	30.00	8.00	7.00	NBR	SUB-3429
E07030U201	45.00	30.00	8.00	7.00	FKM	SUB-4223
E07030L509	**45.00**	**30.00**	**9.00**	**8.00**	**PU**	**PUB-465**
E070301018	45.00	30.00	9.00	8.00	NBR	SUB-2703
E07030L509	45.00	30.00	9.00	8.00	PU	PUB-1485
E070301172	45.00	30.00	9.00	8.00	NBR	SUB-4123
E070305907	**45.00**	**30.00**	**10.00**	**9.00**	**PU**	**PUB-104**
E07030L514	**45.00**	**30.00**	**11.00**	**10.00**	**PU**	**PUB-334**
E07030L514	45.00	30.00	11.00	10.00	PU	PUB-1467
E070301173	45.00	30.00	11.00	10.00	NBR	SUB-4124
E070301001	45.00	30.00	11.00	10.00	NBR	SUB-2340
E07030L524	45.00	30.00	11.20	10.20	PU	PUB-675
E07030L520	45.00	30.00	12.00	11.00	PU	PUB-636
E070306608	45.00	30.00	15.00	14.00	FKM	SUB-1435
E07032L512	45.00	32.00	7.50	6.50	PU	PUB-723
E070321111	45.00	32.00	7.50	6.50	NBR	SUB-1264
E070321009	45.00	32.00	8.00	7.00	NBR	SUB-2705
E07032L506	**45.00**	**32.00**	**9.00**	**8.00**	**PU**	**PUB-491**
E07032U301	45.00	32.00	9.00	8.00	FKM	SUB-3362
E070326703	45.00	32.00	10.00	9.00	FKM	SUB-1607
E070326605	45.00	32.00	11.00	10.00	FKM	SUB-225
E07032L504	**45.00**	**32.00**	**11.00**	**10.00**	**PU**	**PUB-137**
E070346702	45.00	34.00	5.80	4.80	FKM	SUB-2350
E070346601	45.00	34.00	7.00	6.00	FKM	SUB-1654
E07034L502	**45.00**	**34.00**	**8.00**	**7.00**	**PU**	**PUB-464**
E07034L520	45.00	34.00	9.00	8.00	PU	PUB-1725
E070351101	45.00	35.00	6.00	5.00	NBR	SUB-3159
E070351101	45.00	35.00	6.00	5.00	FKM	SUB-898
E07035L550	45.00	35.00	6.00	5.00	PU	PUB-1721
E070356620	45.00	35.00	6.50	5.50	FKM	SUB-2603
E07035L531	45.00	35.00	6.60	5.60	PU	PUB-1010
E07035L502	45.00	35.00	7.00	6.00	PU	PUB-1394
E07035L502	**45.00**	**35.00**	**7.00**	**6.00**	**PU**	**PUB-210**
E070354501	45.00	35.00	7.00	6.00	VMQ	SUB-2780
E070356403	45.00	35.00	7.00	6.00	FKM	SUB-1623
E070351003	45.00	35.00	7.00	6.00	NBR	SUB-2250
E070356706	45.00	35.00	7.00	6.00	FKM	SUB-2911
E070350828	45.00	35.00	7.00	6.00	NBR	SUB-3952
E070351149	45.00	35.00	7.00	6.00	NBR	SUB-3884

Part No.	D (H10)	d (f8/h9)	L (+0.2)	H	Material	Mould No.
E07035L528	45.00	35.00	7.40	6.40	PU	PUB-725
E070353401	45.00	35.00	7.50	6.50	EPDM	SUB-2072
E07035L518	45.00	35.00	7.50	6.50	PU	PUB-552
E070356606	45.00	35.00	7.50	6.50	FKM	SUB-1445
E07035L507	**45.00**	**35.00**	**8.00**	**7.00**	**PU**	**PUB-323**
E070356704	45.00	35.00	8.00	7.00	FKM	SUB-1752
E07035L507	45.00	35.00	8.00	7.00	PU	PUB-1168
E070351115	45.00	35.00	8.00	7.00	NBR	SUB-817
E070351153	45.00	35.00	8.00	7.00	NBR	SUB-4105
E07035L524	45.00	35.00	8.50	7.50	PU	PUB-679
E070356621	45.00	35.00	9.00	8.00	FKM	SUB-2627
E070351008	45.00	35.00	9.00	8.00	NBR	SUB-1280
E07035L513	**45.00**	**35.00**	**9.00**	**8.00**	**PU**	**PUB-548**
E07035L513	45.00	35.00	9.00	8.00	PU	PUB-1484
E070351154	45.00	35.00	9.00	8.00	NBR	SUB-4104
E070356619	45.00	35.00	11.00	10.00	FKM	SUB-1156
E07035L504	**45.00**	**35.00**	**11.00**	**10.00**	**PU**	**PUB-325**
E070351102	45.00	35.00	11.00	10.00	NBR	SUB-3161
E070351135	45.00	35.50	7.00	6.00	NBR	SUB-1753
E070356615	45.00	35.50	7.00	6.00	FKM	SUB-1533
E07035L564	45.00	35.50	7.00	6.00	PU	PUB-2027
E07035L505	**45.00**	**35.50**	**7.50**	**6.50**	**PU**	**PUB-169**
E070366603	45.00	36.00	7.00	6.00	FKM	SUB-2273
E07036L505	45.00	36.00	8.00	7.00	PU	PUB-591
E070376701	45.00	37.00	4.00	3.00	FKM	SUB-1898
E07037L503	45.00	37.00	7.00	6.00	PU	PUB-906
E070371111	45.00	37.00	7.00	6.00	NBR	SUB-3653
E07038L516	45.00	38.00	6.50	5.50	PU	PUB-1001
E07038L528	45.00	38.00	7.00	6.00	PU	PUB-1855
E07038L526	45.00	38.00	7.50	6.50	PU	PUB-1734
E07038L501	**45.00**	**38.00**	**9.00**	**8.00**	**PU**	**PUB-463**
E070391101	45.00	39.00	5.00	4.00	NBR	SUB-475
E07040L525	45.00	40.00	7.00	6.00	PU	PUB-1344
E070381008	45.33	38.10	4.96	3.96	NBR	SUB-2486
E07035L543	45.50	35.50	7.00	6.00	PU	PUB-1494
E070398801	45.64	39.29	6.10	5.10	PU	PUB-1236
E070366601	45.70	36.00	9.00	8.00	FKM	SUB-1493
E070251126	46.00	25.00	16.00	15.00	NBR	SUB-1693
E07028L511	46.00	28.00	13.00	12.00	PU	PUB-570
E07032L548	46.00	32.00	9.00	8.00	PU	PUB-1839
E07032L530	46.00	32.00	11.00	10.00	PU	PUB-1264
E070351143	46.00	35.00	7.00	6.00	NBR	SUB-2881
E070356627	46.00	35.00	8.30	7.30	FKM	SUB-3320
E070351144	46.00	35.00	9.00	8.00	NBR	SUB-2885
E07035L551	46.00	35.00	9.00	8.00	PU	PUB-1720
E070356611	46.00	35.00	11.00	10.00	FKM	SUB-1422
E07036L508	46.00	36.00	6.50	5.50	PU	PUB-1021
E07036L514	46.00	36.00	7.00	6.00	PU	PUB-1350
E070366708	46.00	36.00	7.00	6.00	FKM	SUB-2265
E07036L503	**46.00**	**36.00**	**8.00**	**7.00**	**PU**	**PUB-327**
E07036L503	46.00	36.00	8.00	7.00	PU	PUB-1301
E070366607	46.00	36.00	8.00	7.00	FKM	SUB-1289

Bold sizes are readily available in stock.
Other materials are available on request.

E07

Single Acting Symmetrical Seal

MAX SPARE LIMITED
QUALITY. PRECISION. SPEED.

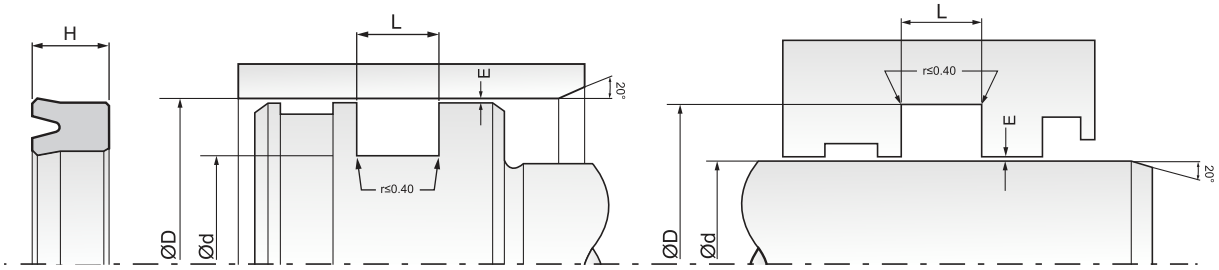

Part No.	D (H10)	d (f8/h9)	L (+0.2)	H	Material	Mould No.
E07036L517	46.00	36.00	8.20	7.20	PU	PUB-1754
E070360801	46.00	36.00	8.30	7.30	NBR	SUB-2172
E070366704	46.00	36.00	8.30	7.30	FKM	SUB-1982
E070366605	46.00	36.00	9.00	8.00	FKM	SUB-2644
E070361111	46.00	36.00	9.00	8.00	NBR	SUB-2886
E07036L519	**46.00**	**36.00**	**9.00**	**8.00**	**PU**	**PUB-1902**
E070366702	46.00	36.00	9.00	8.00	FKM	SUB-2308
E070361114	46.00	36.00	9.00	8.00	NBR	SUB-4132
E07036L513	46.00	36.00	10.00	9.00	PU	PUB-1343
E070361109	46.00	36.00	11.00	10.00	NBR	SUB-2324
E070368902	46.00	36.00	11.00	10.00	PU	PUB-1918
E070381135	46.00	38.00	7.00	6.00	NBR	SUB-4142
E070391104	46.00	39.00	5.30	4.30	NBR	SUB-2080
E070401146	46.00	40.00	6.00	5.00	NBR	SUB-2469
E07040L541	46.00	40.00	6.00	5.00	PU	PUB-1495
E070286606	47.00	28.00	11.00	10.00	FKM	SUB-2270
E070321130	47.00	32.00	8.50	7.50	NBR	SUB-2784
E070321141	47.00	32.00	11.00	10.00	NBR	SUB-4113
E07032L510	47.00	32.00	12.50	11.50	PU	PUB-672
E07035L553	47.00	35.00	7.00	6.00	PU	PUB-1726
E07035L525	47.00	35.00	8.00	7.00	PU	PUB-351
E070356626	47.00	35.00	8.00	7.00	FKM	SUB-3241
E070351106	47.00	35.00	9.00	8.00	NBR	SUB-3428
E070361113	47.00	36.00	8.00	7.00	NBR	SUB-4048
E07036L512	47.00	36.00	9.50	8.50	PU	PUB-1277
E07037L505	47.00	37.00	8.00	7.00	PU	PUB-1723
E07038L517	47.00	38.00	6.00	5.00	PU	PUB-1002
E07038L515	47.00	38.00	8.00	7.00	PU	PUB-1003
E07038L518	47.00	38.00	10.00	9.00	PU	PUB-1348
E070311002	47.62	31.75	12.11	11.11	NBR	SUB-1068
E070341121	47.62	34.92	5.76	4.76	NBR	SUB-1367
E07034L511	47.62	34.92	6.00	5.00	PU	PUB-997
E07034L510	47.62	34.92	8.00	7.00	PU	PUB-998
E070346403	47.62	34.92	10.52	9.52	FKM	SUB-1571
E070381127	47.62	38.10	10.52	9.52	NBR	SUB-1697
E07386701	47.63	38.10	5.76	4.76	FKM	SUB-2507
E07038L509	47.63	38.10	10.52	9.52	PU	PUB-668
E070381134	47.69	38.10	5.75	4.75	NBR	SUB-3831
E070381012	47.75	38.10	5.78	4.78	NBR	SUB-4053
E070301024	48.00	30.00	10.00	9.00	NBR	SUB-4046
E07030L541	48.00	30.00	11.00	10.00	PU	PUB-1441
E070321107	48.00	32.00	9.00	8.00	NBR	SUB-1162
E070321142	48.00	32.00	9.00	8.00	NBR	SUB-4109
E07032L503	**48.00**	**32.00**	**11.00**	**10.00**	**PU**	**PUB-462**
E070321143	48.00	32.00	11.00	10.00	NBR	SUB-4110
E070341009	48.00	34.00	13.00	12.00	NBR	SUB-2062
E070356618	48.00	35.00	7.00	6.00	FKM	SUB-2122
E070356613	48.00	35.00	8.00	7.00	FKM	SUB-1481
E07035L557	48.00	35.00	8.00	7.00	PU	PUB-1801
E07035L552	48.00	35.00	9.00	8.00	PU	PUB-1724
E070351155	48.00	35.00	9.00	8.00	NBR	SUB-4103
E07035L512	**48.00**	**35.00**	**10.00**	**9.00**	**PU**	**PUB-461**

Part No.	D (H10)	d (f8/h9)	L (+0.2)	H	Material	Mould No.
E07035L512	48.00	35.00	10.00	9.00	PU	PUB-1510
E070351156	48.00	35.00	11.00	10.00	NBR	SUB-4102
E070366604	48.00	36.00	6.00	5.00	FKM	SUB-2552
E070366707	48.00	36.00	7.00	6.00	FKM	SUB-2007
E070361101	48.00	36.00	7.00	6.00	NBR	SUB-3163
E070361007	48.00	36.00	7.60	6.60	NBR	SUB-3141
E07036L516	48.00	36.00	9.00	8.00	PU	PUB-1753
E070361115	48.00	36.00	9.00	8.00	NBR	SUB-4121
E070371109	48.00	37.00	7.50	6.50	NBR	SUB-2297
E070381133	48.00	38.00	6.00	5.00	NBR	SUB-3364
E07038L504	48.00	38.00	7.00	6.00	PU	PUB-515
E070381136	48.00	38.00	7.00	6.00	NBR	SUB-4101
E07038L507	48.00	38.00	8.00	7.00	PU	PUB-551
E070381137	48.00	38.00	8.00	7.00	NBR	SUB-4100
E07038L511	48.00	38.00	8.50	7.50	PU	PUB-905
E070381101	48.00	38.00	8.50	7.50	NBR	SUB-3170
E07038L502	**48.00**	**38.00**	**9.00**	**8.00**	**PU**	**PUB-460**
E070381138	48.00	38.00	9.00	8.00	NBR	SUB-4099
E07038L516	48.00	38.00	11.00	10.00	PU	PUB-1619
E070381139	48.00	38.00	11.00	10.00	NBR	SUB-4097
E070401152	48.00	40.00	5.00	4.00	NBR	SUB-3172
E07040L522	48.00	40.00	6.70	5.70	PU	PUB-961
E070401166	48.00	40.00	7.00	6.00	NBR	SUB-4098
E07040L553	48.00	40.00	7.00	6.00	PU	PUB-1784
E070405903	48.00	40.00	8.00	7.00	PU	PUB-1803
E07040L507	**48.00**	**40.00**	**9.00**	**8.00**	**PU**	**PUB-384**
E070401121	48.00	40.00	9.00	8.00	NBR	SUB-605
E070401167	48.00	40.00	9.00	8.00	NBR	SUB-4095
E07040L520	48.00	40.00	9.50	8.50	PU	PUB-935
E07040L543	48.00	40.00	10.58	9.58	PU	PUB-1547
E070406710	48.00	40.00	11.00	10.00	FKM	SUB-2069
E07040L534	48.00	40.00	11.00	10.00	PU	PUB-1275
E070401150	48.00	40.00	11.00	10.00	NBR	SUB-3128
E070401168	48.00	40.00	11.00	10.00	NBR	SUB-4096
E07040L536	48.00	40.00	11.40	10.40	PU	PUB-1322
E070406607	48.50	40.00	7.00	6.00	FKM	SUB-1417
E070361112	48.80	36.60	9.00	8.00	NBR	SUB-3933
E070351142	49.00	35.00	11.00	10.00	NBR	SUB-2500
E07041V201	49.19	41.24	5.00	4.00	NBR	SUB-2721
E070381128	49.48	38.10	7.02	6.02	NBR	SUB-1770
E070241124	50.00	24.00	6.00	5.00	NBR	SUB-1827
E07024L512	50.00	24.00	13.00	12.00	PU	PUB-1080
E07028L517	50.00	28.00	11.00	10.00	PU	PUB-889
E07028L509	50.00	28.00	11.00	10.00	PU	PUB-534
E070306712	50.00	30.00	4.00	3.00	FKM	SUB-2335
E07030L530	50.00	30.00	7.00	6.00	PU	PUB-999
E07030L531	50.00	30.00	9.00	8.00	PU	PUB-391
E070302001	50.00	30.00	9.00	8.00	CR	SUB-4057
E070306620	50.00	30.00	9.00	8.00	FKM	SUB-4199
E07030L510	**50.00**	**30.00**	**11.00**	**10.00**	**PU**	**PUB-459**
E070306605	50.00	30.00	11.00	10.00	FKM	SUB-1821
E070301140	50.00	30.00	11.00	10.00	NBR	SUB-1546

Bold sizes are readily available in stock.
Other materials are available on request.

E07

Single Acting Symmetrical Seal

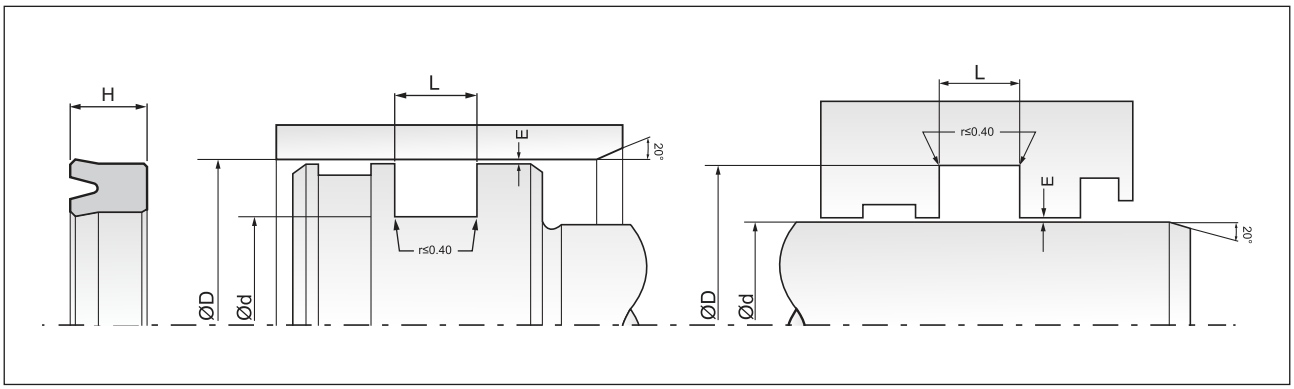

Part No.	D (H10)	d (f8/h9)	L (+0.2)	H	Material	Mould No.
E070301156	50.00	30.00	11.00	10.00	NBR	SUB-3130
E070301174	50.00	30.00	11.00	10.00	NBR	SUB-4115
E07030L540	50.00	30.00	13.00	12.00	PU	PUB-1432
E070306618	50.00	30.00	13.00	12.00	FKM	SUB-4164
E070301159	50.00	30.00	13.00	12.00	NBR	SUB-3684
E070321126	50.00	32.00	8.00	7.00	NBR	SUB-2220
E07032L533	50.00	32.00	9.00	8.00	PU	PUB-1369
E07032L518	50.00	32.00	11.00	10.00	PU	PUB-826
E070321122	50.00	32.00	11.00	10.00	NBR	SUB-1858
E07034L508	50.00	34.00	9.00	8.00	PU	PUB-914
E07034L518	50.00	34.00	11.00	10.00	PU	PUB-1586
E07034L503	**50.00**	**34.00**	**13.00**	**12.00**	**PU**	**PUB-458**
E07035L559	50.00	35.00	7.00	6.00	PU	PUB-1895
E070356705	50.00	35.00	8.00	7.00	FKM	SUB-1542
E070351137	50.00	35.00	8.00	7.00	NBR	SUB-1838
E07035L544	50.00	35.00	8.00	7.00	PU	PUB-1500
E070351017	50.00	35.00	8.00	7.00	NBR	SUB-3691
E070356622	50.00	35.00	8.30	7.30	FKM	SUB-2734
E070356707	50.00	35.00	9.00	8.00	FKM	SUB-1737
E07035L508	**50.00**	**35.00**	**9.00**	**8.00**	**PU**	**PUB-457**
E070351006	50.00	35.00	9.00	8.00	NBR	SUB-2909
E070351141	50.00	35.00	9.00	8.00	NBR	SUB-365
E070351004	50.00	35.00	10.40	9.40	NBR	SUB-2533
E07035L503	50.00	35.00	11.00	10.00	PU	PUB-1198
E07035L503	**50.00**	**35.00**	**11.00**	**10.00**	**PU**	**PUB-107**
E070351104	50.00	35.00	11.00	10.00	NBR	SUB-707
E070351157	50.00	35.00	11.00	10.00	NBR	SUB-4147
E07035L509	**50.00**	**35.00**	**12.00**	**11.00**	**PU**	**PUB-456**
E070356610	50.00	35.00	12.00	11.00	FKM	SUB-1406
E07035L509	50.00	35.00	12.00	11.00	PU	PUB-1501
E070351105	50.00	35.00	12.40	11.40	NBR	SUB-384
E07035L554	50.00	35.00	13.00	12.00	PU	PUB-1731
E07035Q201	50.00	35.00	14.50	13.50	PU	PUB-1691
E07036106	50.00	36.00	7.50	6.50	NBR	SUB-3038
E07036L504	**50.00**	**36.00**	**9.00**	**8.00**	**PU**	**PUB-455**
E07036L504	50.00	36.00	9.00	8.00	PU	PUB-1503
E070366608	50.00	36.00	10.00	9.00	FKM	SUB-3768
E070361103	50.00	36.00	11.00	10.00	NBR	SUB-323
E070371108	50.00	37.00	8.00	7.00	NBR	SUB-2093
E070371107	50.00	37.00	10.50	9.50	NBR	SUB-1718
E070381102	50.00	38.00	6.00	5.00	NBR	SUB-3551
E070386501	50.00	38.00	7.00	6.00	FKM	SUB-1734
E070380801	50.00	38.00	7.00	6.00	NBR	SUB-1519
E070381132	50.00	38.00	7.00	6.00	NBR	SUB-3164
E070381131	50.00	38.00	8.00	7.00	NBR	SUB-2514
E07038L512	**50.00**	**38.00**	**8.50**	**7.50**	**PU**	**PUB-928**
E07038L512	50.00	38.00	8.50	7.50	PU	PUB-1417
E07038L503	50.00	38.00	9.00	8.00	PU	PUB-1930
E070381011	50.00	38.00	9.00	8.00	NBR	SUB-3840
E070381112	50.00	38.00	11.00	10.00	NBR	SUB-1712
E07038L506	50.00	38.00	11.00	10.00	PU	PUB-329
E070381009	50.00	38.00	11.00	10.00	NBR	SUB-2690

Part No.	D (H10)	d (f8/h9)	L (+0.2)	H	Material	Mould No.
E070381112	50.00	38.00	11.00	10.00	NBR	SUB-3162
E07038L508	50.00	38.60	9.00	8.00	PU	PUB-631
E07039L502	50.00	39.00	11.00	10.00	PU	PUB-616
E070406711	50.00	40.00	6.00	5.00	FKM	SUB-1197
E07040L508	**50.00**	**40.00**	**6.00**	**5.00**	**PU**	**PUB-241**
E070401116	50.00	40.00	6.00	5.00	NBR	SUB-983
E07040L508	50.00	40.00	6.00	5.00	PU	PUB-1538
E070401169	50.00	40.00	6.00	5.00	NBR	SUB-4093
E070406715	50.00	40.00	6.00	5.00	FKM	SUB-3820
E070401123	50.00	40.00	6.50	5.50	NBR	SUB-1185
E070401123	50.00	40.00	6.50	5.50	NBR	SUB-1701
E070401101	50.00	40.00	6.85	5.85	NBR	SUB-2457
E070401011	50.00	40.00	7.00	6.00	NBR	SUB-1990
E07040L503	50.00	40.00	7.00	6.00	PU	PUB-1163
E07040L503	**50.00**	**40.00**	**7.00**	**6.00**	**PU**	**PUB-705**
E07040L540	50.00	40.00	7.00	6.00	PU	PUB-1368
E070401105	50.00	40.00	7.00	6.00	NBR	SUB-3158
E070406612	50.00	40.00	7.00	6.00	FKM	SUB-761
E070402202	50.00	40.00	7.00	6.00	CR	SUB-3595
E070401160	50.00	40.00	7.00	6.00	NBR	SUB-3885
E07040L537	50.00	40.00	7.30	6.30	PU	PUB-1334
E070401004	50.00	40.00	7.30	6.30	NBR	SUB-3249
E07040L512	50.00	40.00	7.50	6.50	PU	PUB-482
E070402203	50.00	40.00	7.50	6.50	CR	SUB-4139
E070401002	50.00	40.00	8.00	7.00	NBR	SUB-1111
E07040L505	**50.00**	**40.00**	**8.00**	**7.00**	**PU**	**PUB-383**
E07040L505	50.00	40.00	8.00	7.00	PU	PUB-1167
E070401109	50.00	40.00	8.00	7.00	NBR	SUB-1819
E070406601	50.00	40.00	8.00	7.00	FKM	SUB-1927
E070404503	50.00	40.00	8.00	7.00	VMQ	SUB-3614
E07040L551	50.00	40.00	8.00	7.00	PU	PUB-1766
E070401161	50.00	40.00	8.00	7.00	NBR	SUB-3883
E070401163	50.00	40.00	8.00	7.00	NBR	SUB-3990
E07040L523	**50.00**	**40.00**	**8.30**	**7.30**	**PU**	**PUB-980**
E070406403	50.00	40.00	8.30	7.30	FKM	SUB-112
E07040L524	**50.00**	**40.00**	**8.50**	**7.50**	**PU**	**PUB-983**
E070401157	50.00	40.00	8.50	7.50	NBR	SUB-3734
E070406716	50.00	40.00	8.50	7.50	FKM	SUB-4221
E070401147	50.00	40.00	9.00	8.00	NBR	SUB-2519
E070403501	50.00	40.00	9.00	8.00	EPDM	SUB-1744
E07040L529	50.00	40.00	9.00	8.00	PU	PUB-1074
E07040L509	**50.00**	**40.00**	**9.00**	**8.00**	**PU**	**PUB-706**
E070406706	50.00	40.00	9.00	8.00	FKM	SUB-1689
E070401170	50.00	40.00	9.00	8.00	NBR	SUB-4094
E07040L529	50.00	40.00	9.50	8.50	PU	PUB-1237
E070400601	50.00	40.00	10.00	9.00	NBR	SUB-1828
E070406712	50.00	40.00	11.00	10.00	FKM	SUB-2947
E070406613	50.00	40.00	11.00	10.00	FKM	SUB-2536
E07040L504	**50.00**	**40.00**	**11.00**	**10.00**	**PU**	**PUB-707**
E07040L504	50.00	40.00	11.00	10.00	PU	PUB-1166
E07040L530	50.00	40.00	11.00	10.00	PU	PUB-1144
E070401102	50.00	40.00	11.00	10.00	NBR	SUB-3167

Bold sizes are readily available in stock.
Other materials are available on request.

E07

Single Acting Symmetrical Seal

MAX SPARE LIMITED
QUALITY. PRECISION. SPEED.

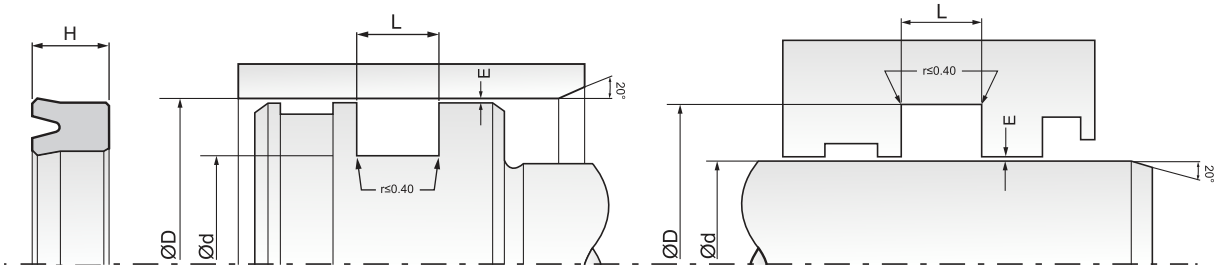

Part No.	D (H10)	d (f8/h9)	L (+0.2)	H	Material	Mould No.
E070406705	50.00	40.00	11.00	10.00	FKM	SUB-757
E07040L554	50.00	40.00	11.00	10.00	PU	PUB-1911
E07040L517	50.00	40.00	12.00	11.00	PU	PUB-198
E07040L510	**50.00**	**40.00**	**13.00**	**12.00**	**PU**	**PUB-454**
E070411106	50.00	41.00	6.50	5.50	NBR	SUB-1547
E070411009	50.00	41.00	8.00	7.00	NBR	SUB-2744
E07041L505	50.00	41.00	9.00	8.00	PU	PUB-1528
E070411011	50.00	41.00	9.50	8.50	NBR	SUB-3857
E07042L501	**50.00**	**42.00**	**6.00**	**5.00**	**PU**	**PUB-453**
E070426602	50.00	42.00	6.00	5.00	FKM	SUB-3465
E070426703	50.00	42.00	6.60	5.60	FKM	SUB-2508
E07042L505	50.00	42.00	7.00	6.00	PU	PUB-333
E070421104	50.00	42.00	7.00	6.00	NBR	SUB-3169
E07042L512	50.00	42.00	8.00	7.00	PU	PUB-2025
E070421109	50.00	42.00	8.00	7.00	NBR	SUB-4162
E070421102	50.00	42.00	9.00	8.00	NBR	SUB-3168
E07042L511	50.00	42.00	9.00	8.00	PU	PUB-1913
E07042L506	50.00	42.00	11.00	10.00	PU	PUB-819
E07042L504	50.00	42.00	12.00	11.00	PU	PUB-719
E07044L511	50.00	44.00	8.00	7.00	PU	PUB-804
E07044L518	50.00	44.00	9.00	8.00	PU	PUB-1191
E070441001	50.00	44.00	9.50	8.50	NBR	SUB-2733
E07044L516	50.00	44.00	9.50	8.50	PU	PUB-1727
E07044L512	50.00	44.45	7.00	6.00	PU	PUB-1000
E07045L537	50.00	45.00	7.00	6.00	PU	PUB-1149
E07039L503	50.20	39.90	7.80	6.80	PU	PUC-1263
E070411007	50.50	41.44	5.60	4.60	NBR	SUC-1478
E070462201	50.55	46.00	5.00	4.00	CR	SUC-2766
E07031L503	50.80	31.70	12.00	11.00	PU	PUC-615
E070346603	50.80	34.92	8.94	7.94	FKM	SUC-2248
E07034L517	50.80	34.92	10.52	9.52	PU	PUC-1050
E070346604	50.80	34.92	13.70	12.70	FKM	SUC-2523
E07034L509	50.80	34.93	8.93	7.93	PU	PUC-721
E070351016	50.80	35.00	9.25	8.25	NBR	SUC-2399
E070381107	50.80	38.10	7.35	6.35	NBR	SUC-625
E070386606	50.80	38.10	7.50	6.50	FKM	SUC-2054
E070381103	50.80	38.10	8.13	7.13	NBR	SUC-2385
E07038L529	50.80	38.10	8.35	7.35	PU	PUC-1326
E070381109	50.80	38.10	10.10	9.10	NBR	SUC-915
E07038L510	50.80	38.10	10.52	9.52	PU	PUC-687
E07039L501	50.80	39.63	9.89	8.89	PU	PUC-436
E07040L533	50.80	40.00	8.30	7.30	PU	PUC-843
E070401143	50.80	40.28	8.14	7.14	NBR	SUC-1581
E070416701	50.80	41.27	5.74	4.74	FKM	SUC-2318
E070411008	50.80	41.27	5.77	4.77	NBR	SUC-1728
E070411107	50.80	41.30	5.80	4.80	NBR	SUC-1423
E070221004	51.00	22.20	12.00	11.00	NBR	SUC-1329
E070341006	51.00	34.50	8.00	7.00	NBR	SUC-1122
E070351113	51.00	35.00	9.00	8.00	NBR	SUC-343
E07035L545	51.00	35.00	11.00	10.00	PU	PUC-1087
E070356625	51.00	35.00	13.00	12.00	FKM	SUC-2079
E07035L520	51.00	35.50	7.50	6.50	PU	PUC-470

Part No.	D (H10)	d (f8/h9)	L (+0.2)	H	Material	Mould No.
E070386605	51.00	38.00	8.00	7.00	FKM	SUC-1453
E070401137	51.00	40.00	6.00	5.00	NBR	SUC-1216
E070406614	51.00	40.00	6.50	5.50	FKM	SUC-1831
E07040L514	51.00	40.00	8.00	7.00	PU	PUC-445
E07040L516	51.00	40.00	17.20	16.20	PU	PUC-525
E07042L510	51.00	42.00	11.00	10.00	PU	PUC-1320
E070376401	51.45	37.75	7.25	6.25	FKM	SUC-1434
E070321121	51.50	32.00	10.70	9.70	NBR	SUC-1193
E07035L527	51.50	35.50	13.00	12.00	PU	PUC-572
E070356709	51.50	35.50	13.00	12.00	FKM	SUC-1398
E07042L509	51.50	42.00	9.80	8.80	PU	PUC-1281
E07043D601	51.83	43.51	4.35	3.35	HNBR	SUC-2061
E070320701	52.00	32.00	11.00	10.00	NBR	SUC-1313
E070326704	52.00	32.00	11.00	10.00	FKM	SUC-1352
E070351146	52.00	35.00	9.00	8.00	NBR	SUC-2208
E070350827	52.00	35.00	11.00	10.00	NBR	SUC-1392
E07035L514	**52.00**	**35.00**	**11.00**	**10.00**	**PU**	**PUC-219**
E07036L506	52.00	36.00	11.00	10.00	PU	PUC-673
E07037L504	52.00	37.00	11.00	10.00	PU	PUC-919
E070386607	52.00	38.00	9.00	8.00	FKM	SUC-2733
E070401014	52.00	40.00	7.00	6.00	NBR	SUC-2434
E070401164	52.00	40.00	7.00	6.00	NBR	SUC-2752
E070401149	52.00	40.00	8.00	7.00	NBR	SUC-1839
E07040L521	52.00	40.00	8.50	7.50	PU	PUC-704
E07040L535	52.00	40.00	9.00	8.00	PU	PUC-903
E070404502	52.00	40.00	9.00	8.00	VMQ	SUC-2256
E07040L528	52.00	40.00	10.00	9.00	PU	PUC-750
E070421103	52.00	42.00	11.00	10.00	NBR	SUC-2147
E070441111	52.00	44.00	6.00	5.00	NBR	SUC-1411
E07044L503	**52.00**	**44.00**	**6.50**	**5.50**	**PU**	**PUC-357**
E07044L516	52.00	44.00	8.00	7.00	PU	PUC-745
E07044L517	52.00	44.00	8.00	7.00	PU	PUC-1266
E070451114	52.00	45.00	7.50	6.50	NBR	SUC-757
E070451131	52.00	45.00	9.00	8.00	NBR	SUC-1621
E07045L554	52.00	45.00	9.00	8.00	PU	PUC-1352
E07046L503	52.00	46.00	9.00	8.00	PU	PUC-819
E07045L526	52.70	45.00	11.00	10.00	PU	PUC-526
E070406701	53.00	40.00	9.00	8.00	FKM	SUC-1770
E070401156	53.00	40.00	9.00	8.00	NBR	SUC-2450
E070430701	53.00	43.00	8.00	7.00	NBR	SUC-1470
E070430801	53.00	43.00	11.00	10.00	NBR	SUC-1224
E07043L503	53.00	43.00	11.00	10.00	PU	PUC-787
E070431002	53.00	43.00	11.00	10.00	NBR	SUC-1000
E070446603	53.00	44.00	13.00	12.00	FKM	SUC-2334
E07045L538	53.00	45.00	7.00	6.00	PU	PUC-824
E07045L542	53.00	45.00	8.00	7.00	PU	PUC-1055
E070451103	53.00	45.00	9.00	8.00	NBR	SUC-2149
E07045L520	53.00	45.00	9.00	8.00	PU	PUC-356
E070456711	53.00	45.00	10.00	9.00	FKM	SUC-1487
E07045L509	**53.00**	**45.00**	**10.30**	**9.30**	**PU**	**PUC-358**
E07045L530	53.00	45.00	11.00	10.00	PU	PUC-146
E07045L541	53.00	45.00	13.00	12.00	PU	PUC-1045

Bold sizes are readily available in stock.
Other materials are available on request.

E07

Single Acting Symmetrical Seal

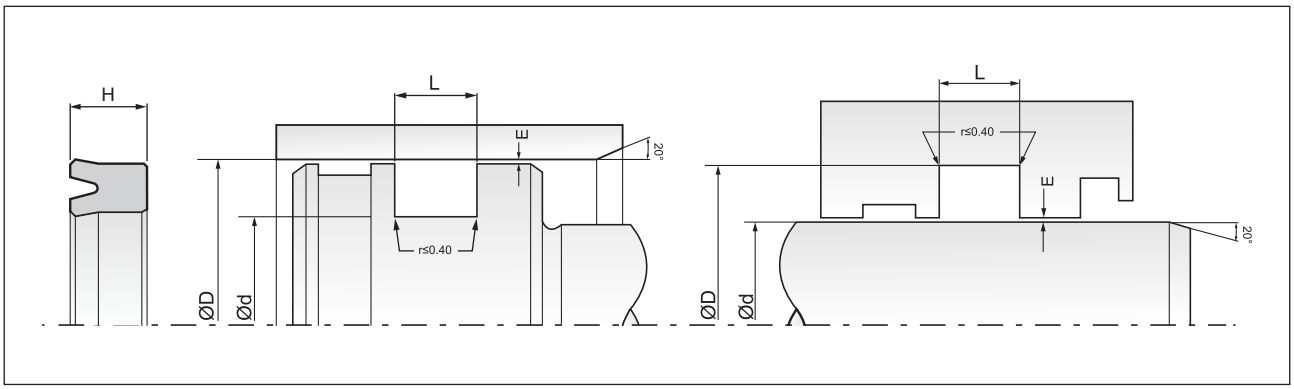

Part No.	D (H10)	d (f8/h9)	L (+0.2)	H	Material	Mould No.
E070441006	53.50	44.50	6.00	5.00	NBR	SUC-2090
E070441113	53.84	44.45	5.74	4.74	NBR	SUC-2696
E070446801	53.97	44.45	5.49	4.49	FKM	SUC-1177
E070446501	53.97	44.45	7.35	6.35	FKM	SUC-2589
E070476601	53.97	47.62	5.74	4.74	FKM	SUC-2493
E07044L520	53.98	44.45	7.35	6.35	PU	PUC-1313
E07044L513	53.98	44.45	10.00	9.00	PU	PUC-726
E07038L513	54.00	38.00	11.00	10.00	PU	PUC-725
E070381108	54.00	38.00	12.00	11.00	NBR	SUC-682
E070401141	54.00	40.00	9.50	8.50	NBR	SUC-1466
E070401159	54.00	40.00	11.00	10.00	NBR	SUC-2565
E070451137	54.00	45.00	8.00	7.00	NBR	SUC-2715
E070481111	54.00	48.00	5.00	4.00	NBR	SUC-1452
E07044L501	54.16	44.45	7.00	6.00	PU	PUC-309
E070451128	54.50	45.00	7.50	6.50	NBR	SUC-1225
E070301128	55.00	30.00	13.00	12.00	NBR	SUC-925
E07035L558	55.00	35.00	8.00	7.00	PU	PUC-1316
E070351005	55.00	35.00	9.00	8.00	NBR	SUC-1886
E070351145	55.00	35.00	11.00	10.00	NBR	SUC-2178
E07035L563	55.00	35.00	11.00	10.00	PU	PUC-1444
E07036L518	55.00	36.00	9.00	8.00	PU	PUC-1240
E070361107	55.00	36.00	11.00	10.00	NBR	SUC-280
E07038R302	55.00	38.00	11.00	10.00	PU	PUC-739
E070401162	55.00	40.00	6.00	5.00	NBR	SUC-2644
E070401138	55.00	40.00	6.50	5.50	NBR	SUC-1233
E07040L526	55.00	40.00	7.00	6.00	PU	PUC-727
E07040L539	55.00	40.00	8.00	7.00	PU	PUC-933
E070404601	55.00	40.00	8.00	7.00	VMQ	SUC-2058
E070406713	55.00	40.00	8.30	7.30	FKM	SUC-2515
E07040L538	55.00	40.00	9.00	8.00	PU	PUC-924
E070401153	55.00	40.00	9.00	8.00	NBR	SUC-2404
E07040T501	55.00	40.00	9.15	8.15	EPDM	SUC-2007
E07040L527	55.00	40.00	10.00	9.00	PU	PUC-728
E070401140	55.00	40.00	10.50	9.50	NBR	SUC-1456
E07040Q201	55.00	40.00	10.85	9.85	PU	PUC-702
E070400801	55.00	40.00	11.00	10.00	NBR	SUC-1154
E070406609	55.00	40.00	11.00	10.00	FKM	SUC-1312
E07040L501	55.00	40.00	11.00	10.00	PU	PUC-1014
E070401151	55.00	40.00	11.00	10.00	NBR	SUC-2154
E07040L501	**55.00**	**40.00**	**11.00**	**10.00**	**PU**	**PUC-125**
E070401154	55.00	40.00	11.00	10.00	NBR	SUC-2411
E07040L558	55.00	40.00	12.00	11.00	PU	PUC-1443
E07040L532	55.00	40.00	13.00	12.00	PU	PUC-840
E070421105	55.00	42.00	7.50	6.50	NBR	SUC-2221
E070436601	55.00	43.00	7.00	6.00	FKM	SUC-1830
E07043L502	55.00	43.00	10.00	9.00	PU	PUC-585
E07045L52	55.00	45.00	6.00	5.00	PU	PUC-527
E070451138	55.00	45.00	6.00	5.00	NBR	SUC-2747
E070451135	55.00	45.00	6.80	5.80	NBR	SUC-2488
E070451101	55.00	45.00	7.00	6.00	NBR	SUC-1101
E07045L540	55.00	45.00	7.00	6.00	PU	PUC-910
E07045L503	**55.00**	**45.00**	**7.00**	**6.00**	**PU**	**PUC-134**

Part No.	D (H10)	d (f8/h9)	L (+0.2)	H	Material	Mould No.
E070456601	55.00	45.00	7.00	6.00	FKM	SUC-1003
E07045L543	55.00	45.00	7.50	6.50	PU	PUC-1053
E070455904	55.00	45.00	7.75	6.75	PU	PUC-1200
E070451132	55.00	45.00	8.00	7.00	NBR	SUC-1756
E07045L507	55.00	45.00	8.00	7.00	PU	PUC-1013
E07045L507	**55.00**	**45.00**	**8.00**	**7.00**	**PU**	**PUC-314**
E070456606	55.00	45.00	8.00	7.00	FKM	SUC-983
E070451139	55.00	45.00	8.00	7.00	NBR	SUC-2753
E07045L552	55.00	45.00	8.20	7.20	PU	PUC-1345
E070456709	55.00	45.00	8.30	7.30	FKM	SUC-1196
E07045L535	55.00	45.00	8.30	7.30	PU	PUC-786
E070451136	55.00	45.00	8.30	7.30	NBR	SUC-2538
E07045L524	**55.00**	**45.00**	**8.50**	**7.50**	**PU**	**PUC-476**
E07045L524	55.00	45.00	8.50	7.50	PU	PUC-1004
E07045L536	**55.00**	**45.00**	**9.00**	**8.00**	**PU**	**PUC-789**
E070456702	55.00	45.00	9.00	8.00	FKM	SUC-262
E070451115	55.00	45.00	9.00	8.00	NBR	SUC-974
E070451140	55.00	45.00	9.00	8.00	NBR	SUC-2750
E070456710	55.00	45.00	11.00	10.00	FKM	SUC-1393
E070451005	55.00	45.00	11.00	10.00	NBR	SUC-828
E07045L501	**55.00**	**45.00**	**11.00**	**10.00**	**PU**	**PUC-441**
E070451102	55.00	45.00	11.00	10.00	NBR	SUC-2148
E07048L505	55.00	48.00	9.00	8.00	PU	PUC-303
E07049L502	55.00	49.00	9.00	8.00	PU	PUC-818
E070446701	55.30	44.50	8.26	7.26	FKM	SUC-1748
E070311004	55.56	31.75	20.31	19.31	NBR	SUC-2688
E070443401	55.57	44.45	5.00	4.00	EPDM	SUC-1676
E070441005	55.57	44.95	5.00	4.00	NBR	SUC-1662
E070451020	55.70	45.00	8.30	7.30	NBR	SUC-2579
E070401139	56.00	40.00	10.00	9.00	NBR	SUC-1273
E070406608	56.00	40.00	11.00	10.00	FKM	SUC-1301
E070401008	56.00	40.00	11.00	10.00	NBR	SUC-223
E070401135	56.00	40.00	13.00	12.00	NBR	SUC-1143
E070426702	56.00	42.00	8.00	7.00	FKM	SUC-1155
E070441110	56.00	44.00	7.00	6.00	NBR	SUC-1189
E070446702	56.00	44.00	11.00	10.00	FKM	SUC-2038
E070441112	56.00	44.00	13.00	12.00	NBR	SUC-1824
E070451104	56.00	45.00	8.00	7.00	NBR	SUC-1289
E070456708	56.00	45.00	8.00	7.00	FKM	SUC-1028
E07045L504	**56.00**	**45.00**	**8.30**	**7.30**	**PU**	**PUC-112**
E07045L504	56.00	45.00	8.30	7.30	PU	PUC-990
E07045L510	**56.00**	**45.00**	**11.00**	**10.00**	**PU**	**PUC-360**
E07046L502	56.00	46.00	8.00	7.00	PU	PUC-450
E070481109	56.00	48.00	4.50	3.50	NBR	SUC-1359
E070351147	57.00	35.00	9.00	8.00	NBR	SUC-2313
E070408905	57.00	40.00	13.00	12.00	PU	PUC-709
E07042L502	**57.00**	**42.00**	**9.00**	**8.00**	**PU**	**PUC-359**
E07044L514	57.00	44.00	9.00	8.00	PU	PUC-729
E070441109	57.00	44.50	11.00	10.00	NBR	SUC-1145
E07045L521	**57.00**	**45.00**	**7.00**	**6.00**	**PU**	**PUC-416**
E070456714	57.00	45.00	8.00	7.00	FKM	SUC-1548
E07047L504	57.00	47.00	4.70	3.70	PU	PUC-1210

Bold sizes are readily available in stock.
Other materials are available on request.

E07

Single Acting Symmetrical Seal

MAX SPARE LIMITED
QUALITY. PRECISION. SPEED.

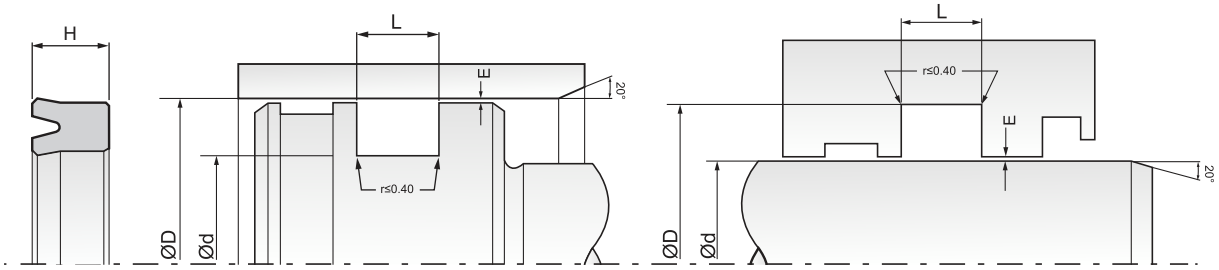

Part No.	D (H10)	d (f8/h9)	L (+0.2)	H	Material	Mould No.
E07047L503	57.00	47.00	4.80	3.80	PU	PUC-1186
E07047L502	57.00	47.00	11.00	10.00	PU	PUC-618
E070484301	57.00	48.00	7.00	6.00	VMQ	SUC-2736
E07048L504	**57.00**	**48.00**	**11.00**	**10.00**	**PU**	**PUC-996**
E07050L564	57.00	50.00	8.50	7.50	PU	PUC-1276
E070311005	57.15	31.75	20.05	19.05	NBR	SUC-2782
E07041L504	57.15	41.27	8.94	7.94	PU	PUC-616
E07041L503	57.15	41.27	10.52	9.52	PU	PUC-556
E070411001	57.15	41.50	9.50	8.50	NBR	SUC-1236
E07044L518	57.15	44.45	8.87	7.87	PU	PUC-1006
E070445906	57.15	44.45	10.52	9.52	PU	PUC-1272
E07044L515	57.15	44.45	11.00	10.00	PU	PUC-730
E070446602	57.15	44.50	8.60	7.60	FKM	SUC-2125
E070411108	57.17	41.14	8.87	7.87	NBR	SUC-2266
E07038R301	58.00	38.00	11.00	10.00	PU	PUC-740
E07038L527	58.00	38.00	11.00	10.00	PU	PUC-1265
E070381130	58.00	38.00	13.00	12.00	NBR	SUC-1433
E070406611	58.00	40.00	8.00	7.00	FKM	SUC-1489
E07040L545	58.00	40.00	11.00	10.00	PU	PUC-1058
E07041L502	58.00	41.00	9.00	8.00	PU	PUC-550
E070456612	58.00	45.00	8.50	7.50	FKM	SUC-1658
E07045L508	58.00	45.00	9.00	8.00	PU	PUC-619
E07045L544	58.00	45.00	11.00	10.00	PU	PUC-1062
E07045L545	58.00	45.00	13.00	12.00	PU	PUC-1063
E070461111	58.00	46.00	7.00	6.00	NBR	SUC-1302
E07047L501	58.00	47.00	9.00	8.00	PU	PUC-442
E07048L512	58.00	48.00	7.50	6.50	PU	PUC-1185
E07048L514	58.00	48.00	7.70	6.70	PU	PUC-1549
E07048L511	58.00	48.00	9.00	8.00	PU	PUC-1057
E07048L515	58.00	48.00	11.00	10.00	PU	PUC-1224
E070500201	58.00	50.00	5.00	4.00	NBR	SUC-1702
E07050L539	58.00	50.00	7.00	6.00	PU	PUC-888
E070501158	58.00	50.00	7.00	6.00	NBR	SUC-2749
E070501152	58.00	50.00	7.30	6.30	NBR	SUC-2210
E07050L502	58.00	50.00	7.50	6.50	PU	PUC-438
E070501151	58.00	50.00	7.50	6.50	NBR	SUC-2209
E070506401	58.00	50.00	8.00	7.00	FKM	SUC-1175
E07050L541	58.00	50.00	9.00	8.00	PU	PUC-917
E070506606	58.00	50.00	9.00	8.00	FKM	SUC-1947
E07050L572	58.00	50.00	10.00	9.00	PU	PUC-1544
E070501111	58.00	50.00	11.00	10.00	NBR	SUC-1997
E07050L565	58.00	50.00	11.00	10.00	PU	PUC-1287
E070501159	58.00	50.00	11.00	10.00	NBR	SUC-2754
E07050L549	58.00	50.00	12.50	11.50	PU	PUC-1025
E07050553	58.00	50.00	13.00	12.00	PU	PUC-1061
E07050L570	59.00	50.00	5.50	4.50	PU	PUC-1380
E07050L548	59.00	50.00	7.00	6.00	PU	PUC-1022
E070341128	59.60	34.50	21.00	20.00	NBR	SUC-2431
E070501107	59.90	50.00	10.00	9.00	NBR	SUC-1765
E070381010	60.00	38.00	9.00	8.00	NBR	SUC-2433
E070381005	60.00	38.00	11.00	10.00	NBR	SUC-1579
E07040L542	60.00	40.00	9.00	8.00	PU	PUC-1026

Part No.	D (H10)	d (f8/h9)	L (+0.2)	H	Material	Mould No.
E070401013	60.00	40.00	11.00	10.00	NBR	SUC-185
E070401103	60.00	40.00	11.00	10.00	NBR	SUC-2146
E07040L502	**60.00**	**40.00**	**11.00**	**10.00**	**PU**	**PUC-240**
E070406707	60.00	40.00	11.00	10.00	FKM	SUC-1211
E070401148	60.00	40.00	13.00	12.00	NBR	SUC-1760
E07040L511	**60.00**	**40.00**	**13.00**	**12.00**	**PU**	**PUC-364**
E070401136	60.00	40.00	16.00	15.00	NBR	SUC-1176
E07043L501	**60.00**	**43.00**	**7.00**	**6.00**	**PU**	**PUC-365**
E070445905	60.00	44.00	9.00	8.00	PU	PUC-439
E070441101	60.00	44.00	10.00	9.00	NBR	SUC-1116
E07044L509	60.00	44.00	11.00	10.00	PU	PUC-531
E07045L539	60.00	45.00	7.00	6.00	PU	PUC-915
E070451130	60.00	45.00	7.50	6.50	NBR	SUC-1528
E07045L533	60.00	45.00	8.50	7.50	PU	PUC-763
E070455905	60.00	45.00	8.50	7.50	PU	PUC-1282
E070456713	60.00	45.00	8.80	7.80	FKM	SUC-1519
E07045L534	60.00	45.00	9.00	8.00	PU	PUC-767
E070452101	60.00	45.00	9.00	8.00	CR/FABRIC	SUC-2767
E07045L550	60.00	45.00	9.50	8.50	PU	PUC-1234
E07045L553	60.00	45.00	10.52	9.52	PU	PUC-1348
E07045R302	60.00	45.00	11.00	10.00	PU	PUC-741
E070451017	60.00	45.00	11.00	10.00	NBR	SUC-710
E07045L505	**60.00**	**45.00**	**11.00**	**10.00**	**PU**	**PUC-106**
E070456712	60.00	45.00	11.00	10.00	FKM	SUC-932
E070452301	60.00	45.00	11.00	10.00	CR	SUC-2528
E070451141	60.00	45.00	11.00	10.00	NBR	SUC-2755
E070451016	60.00	45.00	12.00	11.00	NBR	SUC-1496
E07045L519	**60.00**	**45.00**	**12.00**	**11.00**	**PU**	**PUC-404**
E07045L506	**60.00**	**45.00**	**13.00**	**12.00**	**PU**	**PUC-258**
E070461110	60.00	46.00	10.50	9.50	NBR	SUC-1141
E070460801	60.00	46.50	11.00	10.00	NBR	SUC-1597
E070486602	60.00	48.00	7.00	6.00	FKM	SUC-1695
E07048L507	60.00	48.00	9.00	8.00	PU	PUC-188
E07048L506	60.00	48.00	11.00	10.00	PU	PUC-538
E070504501	60.00	50.00	6.00	5.00	VMQ	SUC-1341
E070506705	60.00	50.00	6.00	5.00	FKM	SUC-1172
E07050L524	60.00	50.00	6.50	5.50	PU	PUC-498
E07050L563	60.00	50.00	6.50	5.50	PU	PUC-1259
E07050L502	60.00	50.00	7.00	6.00	PU	PUC-798
E070501101	60.00	50.00	7.00	6.00	NBR	SUC-1213
E070506713	60.00	50.00	7.00	6.00	FKM	SUC-1486
E070504502	60.00	50.00	7.00	6.00	VMQ	SUC-1915
E07050L502	**60.00**	**50.00**	**7.00**	**6.00**	**PU**	**PUC-138**
E070501157	60.00	50.00	7.00	6.00	NBR	SUC-2600
E07050Q201	60.00	50.00	7.20	6.20	PU	PUC-852
E070501112	60.00	50.00	7.20	6.20	NBR	SUC-2695
E070501020	60.00	50.00	7.30	6.30	NBR	SUC-1902
E07050L529	60.00	50.00	7.50	6.50	PU	PUC-707
E070501022	60.00	50.00	7.50	6.50	NBR	SUC-1673
E070506712	60.00	50.00	7.80	6.80	FKM	SUC-1463
E070503401	60.00	50.00	8.00	7.00	EPDM	SUC-1446
E070506707	60.00	50.00	8.00	7.00	FKM	SUC-1245

Bold sizes are readily available in stock.
Other materials are available on request.

E07

Single Acting Symmetrical Seal

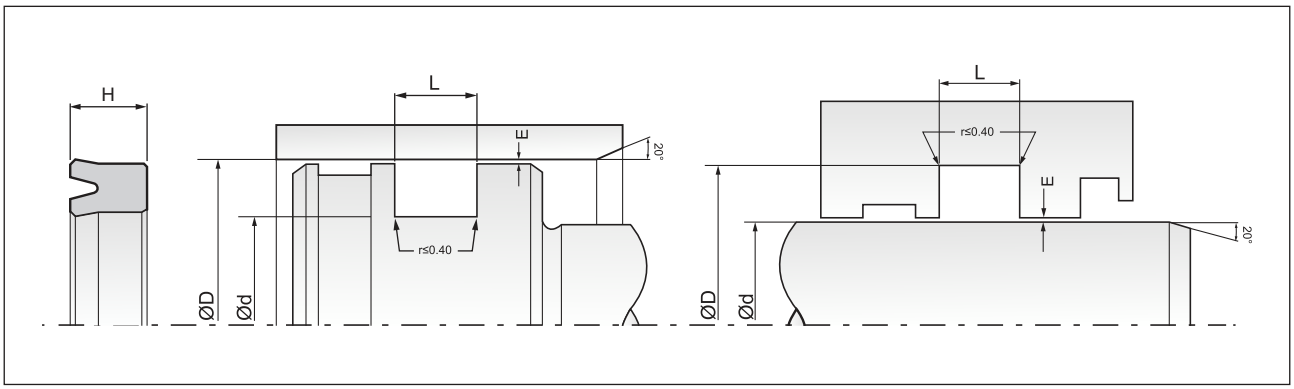

Part No.	D (H10)	d (f8/h9)	L (+0.2)	H	Material	Mould No.
E07050L542	60.00	50.00	8.00	7.00	PU	PUC-916
E070501156	60.00	50.00	8.00	7.00	NBR	SUC-2514
E070501160	60.00	50.00	8.00	7.00	NBR	SUC-2757
E07050L506	**60.00**	**50.00**	**8.30**	**7.30**	**PU**	**PUC-306**
E070506615	60.00	50.00	8.50	7.50	FKM	SUC-1946
E07050L560	60.00	50.00	8.50	7.50	PU	PUC-1204
E070506604	60.00	50.00	9.00	8.00	FKM	SUC-1514
E07050L508	**60.00**	**50.00**	**9.00**	**8.00**	**PU**	**PUC-372**
E070501154	60.00	50.00	9.00	8.00	NBR	SUC-2381
E070506710	60.00	50.00	10.00	9.00	FKM	SUC-1340
E07050L555	60.00	50.00	10.00	9.00	PU	PUC-1073
E07050S801	60.00	50.00	11.00	10.00	NBR	SUC-1626
E070506402	60.00	50.00	11.00	10.00	FKM	SUC-896
E07050L503	60.00	50.00	11.00	10.00	PU	PUC-1015
E070501103	60.00	50.00	11.00	10.00	NBR	SUC-2150
E070501003	60.00	50.00	11.00	10.00	NBR	SUC-2372
E07050L503	**60.00**	**50.00**	**11.00**	**10.00**	**PU**	**PUC-102**
E07050L503	60.00	50.00	11.00	10.00	PU	PUC-1107
E07050L509	**60.00**	**50.00**	**13.00**	**12.00**	**PU**	**PUC-902**
E07050L509	**60.00**	**50.00**	**13.00**	**12.00**	**PU**	**PUC-369**
E070516501	60.00	51.00	10.00	9.00	FKM	SUC-1722
E07051L501	60.00	51.00	11.50	10.50	PU	PUC-454
E07054L502	60.00	54.00	9.00	8.00	PU	PUC-817
E07050L557	60.20	50.80	7.35	6.35	PU	PUC-1197
E07040L531	60.30	40.00	14.00	13.00	PU	PUC-838
E07044L506	60.32	44.45	10.52	9.52	PU	PUC-492
E07044L505	60.32	44.45	13.70	12.70	PU	PUC-469
E07050L301	60.32	50.80	6.55	5.55	AFLAS	SUC-2065
E070501102	60.32	50.80	7.35	6.35	NBR	SUC-1521
E070506617	60.32	50.80	10.50	9.50	FKM	SUC-2055
E07041L508	60.33	41.27	10.52	9.52	PU	PUC-1312
E070501024	60.70	50.00	8.30	7.30	NBR	SUC-2578
E07045L531	61.00	45.00	11.00	10.00	PU	PUC-678
E07051L502	61.00	51.00	11.00	10.00	PU	PUC-467
E07040L544	62.00	40.00	11.00	10.00	PU	PUC-1059
E070411002	62.00	41.00	13.00	12.00	NBR	SUC-1298
E070421106	62.00	42.00	11.00	10.00	NBR	SUC-2373
E07042L507	62.00	42.00	12.00	11.00	PU	PUC-906
E070421001	62.00	42.00	13.00	12.00	NBR	SUC-1248
E070421107	62.00	42.00	13.00	12.00	NBR	SUC-2387
E070446703	62.00	44.00	13.00	12.00	FKM	SUC-2438
E07045L527	62.00	45.00	9.00	8.00	PU	PUC-537
E07045L511	**62.00**	**45.00**	**9.50**	**8.50**	**PU**	**PUC-366**
E070471109	62.00	47.00	9.50	8.50	NBR	SUC-1404
E070481110	62.00	48.00	8.00	7.00	NBR	SUC-1376
E070481108	62.00	48.00	13.00	12.00	NBR	SUC-1324
E070496401	62.00	49.50	7.80	6.80	FKM	SUC-1435
E07050L562	62.00	50.00	7.00	6.00	PU	PUC-1232
E07050L510	**62.00**	**50.00**	**9.50**	**8.50**	**PU**	**PUC-397**
E070501016	62.00	50.00	10.50	9.50	NBR	SUC-1504
E070506201	62.00	50.00	11.00	10.00	FKM	SUC-2031
E07050K301	62.00	50.00	11.00	10.00	HYT-2	PUC-516

Part No.	D (H10)	d (f8/h9)	L (+0.2)	H	Material	Mould No.
E07050L523	**62.00**	**50.00**	**11.00**	**10.00**	**PU**	**PUC-190**
E07050L551	62.00	50.00	13.00	12.00	PU	PUC-1054
E070501147	62.00	50.00	15.00	14.00	NBR	SUC-1785
E070516702	62.00	51.00	8.00	7.00	FKM	SUC-1471
E070521114	62.00	52.00	6.00	5.00	NBR	SUC-1753
E07052L506	62.00	52.00	7.00	6.00	PU	PUC-1329
E070521106	62.00	52.00	8.00	7.00	NBR	SUC-916
E070526601	62.00	52.00	11.00	10.00	FKM	SUC-1939
E07053L513	62.00	53.00	8.00	7.00	PU	PUC-773
E070531112	62.00	53.00	8.00	7.00	NBR	SUC-1219
E07053L509	62.00	53.00	11.00	10.00	PU	PUC-570
E070506603	62.50	50.00	15.00	14.00	FKM	SUC-1436
E07035L538	63.00	35.00	11.00	10.00	PU	PUC-889
E070436701	63.00	43.00	13.00	12.00	FKM	SUC-1713
E070446604	63.00	44.50	10.00	9.00	FKM	SUC-2502
E07045L512	**63.00**	**45.00**	**10.00**	**9.00**	**PU**	**PUC-367**
E070451109	63.00	45.00	10.00	9.00	NBR	SUC-971
E07045L502	63.00	45.00	11.00	10.00	PU	PUC-799
E070456613	63.00	45.00	11.00	10.00	FKM	SUC-1963
E07045L502	**63.00**	**45.00**	**11.00**	**10.00**	**PU**	**PUC-191**
E070456715	63.00	45.00	13.00	12.00	FKM	SUC-1684
E07045L518	**63.00**	**45.00**	**13.00**	**12.00**	**PU**	**PUC-133**
E070471101	63.00	47.00	9.00	8.00	NBR	SUC-103
E070486605	63.00	48.00	9.60	8.60	NBR	SUC-2824
E07048L517	63.00	48.00	10.00	9.00	PU	PUC-1361
E070486601	63.00	48.00	10.50	9.50	FKM	SUC-1011
E070481104	63.00	48.00	11.00	10.00	NBR	SUC-1322
E070481102	63.00	48.00	11.00	10.00	NBR	SUC-1290
E07048L501	**63.00**	**48.00**	**11.00**	**10.00**	**PU**	**PUC-564**
E070486603	63.00	48.00	12.00	11.00	FKM	SUC-2787
E07048L509	63.00	48.00	12.40	11.40	PU	PUC-907
E07048L508	**63.00**	**48.00**	**13.00**	**12.00**	**PU**	**PUC-825**
E070481001	63.00	48.00	13.00	12.00	NBR	SUC-2165
E070506619	63.00	50.00	7.00	6.00	FKM	SUC-2194
E07050L518	**63.00**	**50.00**	**7.50**	**6.50**	**PU**	**PUC-269**
E070506702	63.00	50.00	8.00	7.00	FKM	SUC-977
E070506614	63.00	50.00	9.00	8.00	FKM	SUC-111
E070506614	63.00	50.00	9.00	8.00	FKM	SUC-110
E070501014	63.00	50.00	9.00	8.00	NBR	SUC-486
E07050L516	**63.00**	**50.00**	**9.00**	**8.00**	**PU**	**PUC-370**
E070501104	63.00	50.00	9.00	8.00	NBR	SUC-2292
E070501161	63.00	50.00	9.00	8.00	NBR	SUC-2756
E070501145	63.00	50.00	10.00	9.00	NBR	SUC-1595
E07050L517	**63.00**	**50.00**	**10.00**	**9.00**	**PU**	**PUC-327**
E07050L511	**63.00**	**50.00**	**11.00**	**10.00**	**PU**	**PUC-371**
E07050L527	63.00	50.00	11.00	10.00	PU	PUC-590
E070501162	63.00	50.00	11.00	10.00	NBR	SUC-2745
E07050L544	63.00	50.00	12.00	11.00	PU	PUC-939
E07050L545	63.00	50.00	13.00	12.00	PU	PUC-940
E070506620	63.00	50.00	13.00	12.00	FKM	SUC-2255
E07050L554	63.00	50.00	15.00	14.00	PU	PUC-1067
E070501155	63.00	50.00	15.00	14.00	NBR	SUC-2478

Bold sizes are readily available in stock.
Other materials are available on request.

E07

Single Acting Symmetrical Seal

MAX SPARE LIMITED
QUALITY. PRECISION. SPEED.

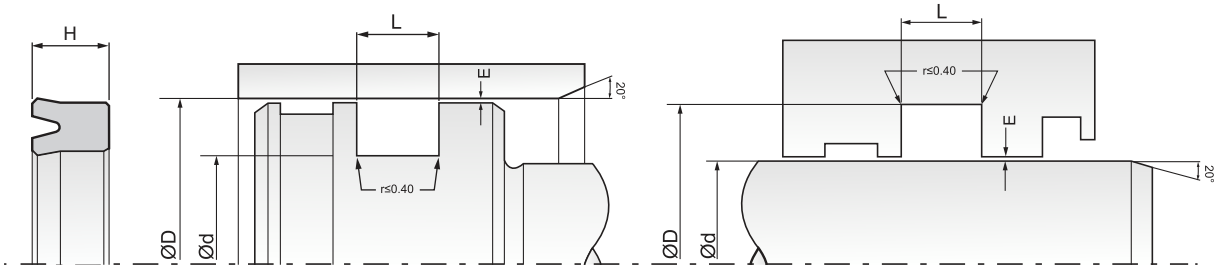

Part No.	D (H10)	d (f8/h9)	L (+0.2)	H	Material	Mould No.
E07050L526	**63.00**	**50.00**	**16.00**	**15.00**	**PU**	**PUC-571**
E07051L504	63.00	51.00	11.00	10.00	PU	PUC-1134
E07051L503	63.00	51.00	13.00	12.00	PU	PUC-929
E07051L505	**63.00**	**51.00**	**15.00**	**14.00**	**PU**	**PUC-1337**
E07051D601	63.00	51.00	15.00	14.00	HNBR	SUC-2682
E070521111	63.00	52.00	7.00	6.00	NBR	SUC-1390
E070521104	63.00	52.00	8.00	7.00	NBR	SUC-911
E07053L507	63.00	53.00	5.00	4.00	PU	PUC-520
E070531105	63.00	53.00	5.00	4.00	NBR	SUC-295
E070536701	63.00	53.00	5.50	4.50	FKM	SUC-846
E07053L517	63.00	53.00	6.00	5.00	NBR	PUC-1225
E070531121	63.00	53.00	6.70	5.70	NBR	SUC-2118
E07053L515	63.00	53.00	6.90	5.90	PU	PUC-952
E070536704	63.00	53.00	7.00	6.00	FKM	SUC-1165
E070531101	63.00	53.00	7.00	6.00	NBR	SUC-1703
E070531102	63.00	53.00	7.00	6.00	NBR	SUC-1102
E07053L505	63.00	53.00	7.00	6.00	PU	PUC-800
E070533301	63.00	53.00	7.00	6.00	EPDM	SUC-2230
E070531104	63.00	53.00	7.00	6.00	NBR	SUC-2152
E07053L505	**63.00**	**53.00**	**7.00**	**6.00**	**PU**	**PUC-103**
E070536705	63.00	53.00	7.30	6.30	FKM	SUC-1309
E07053L510	**63.00**	**53.00**	**7.50**	**6.50**	**PU**	**PUC-573**
E070530803	63.00	53.00	7.50	6.50	NBR	SUC-1806
E070531115	63.00	53.00	8.00	7.00	NBR	SUC-1354
E070536708	63.00	53.00	8.00	7.00	FKM	SUC-2099
E07053L511	**63.00**	**53.00**	**8.00**	**7.00**	**PU**	**PUC-587**
E070531127	63.00	53.00	8.00	7.00	NBR	SUC-2751
E07053L503	**63.00**	**53.00**	**8.30**	**7.30**	**PU**	**PUC-374**
E070536604	63.00	53.00	8.30	7.30	FKM	SUC-1580
E070531103	63.00	53.00	8.50	7.50	NBR	SUC-2151
E07053L518	**63.00**	**53.00**	**9.00**	**8.00**	**PU**	**PUC-1235**
E07053L516	63.00	53.00	9.30	8.30	PU	PUC-1072
E07053L514	**63.00**	**53.00**	**11.00**	**10.00**	**PU**	**PUC-868**
E07053L514	**63.00**	**53.00**	**11.00**	**10.00**	**PU**	**PUC-1244**
E07053L504	**63.00**	**53.00**	**13.50**	**12.50**	**PU**	**PUC-373**
E070536709	63.00	53.70	6.00	5.00	FKM	SUC-2605
E070546604	63.00	54.00	7.00	6.00	FKM	SUC-2551
E070541003	63.00	54.00	7.50	6.50	NBR	SUC-2660
E070556601	63.00	55.00	6.00	5.00	FKM	SUC-1630
E07055L521	63.00	55.00	11.00	10.00	PU	PUC-1226
E07056L513	63.00	56.00	11.00	10.00	PU	PUC-1157
E070546603	63.40	54.00	7.50	6.50	FKM	SUC-2371
E070441004	63.50	44.45	8.87	7.87	NBR	SUC-1159
E070441009	63.50	44.45	10.52	9.52	NBR	SUC-2788
E07044L507	63.50	44.45	16.87	15.87	PU	PUC-497
E070456718	63.50	45.00	22.00	21.00	FKM	SUC-1882
E070471108	63.50	47.30	8.93	7.93	NBR	SUC-1382
E070471103	63.50	47.62	10.52	9.52	NBR	SUC-1108
E070471104	63.50	47.63	8.93	7.93	NBR	SUC-1140
E07049L501	63.50	49.21	10.52	9.52	PU	PUC-493
E07050L613	63.50	50.00	7.00	6.00	PU	PUC-732
E070506621	63.50	50.40	11.20	10.20	FKM	SUC-2383

Part No.	D (H10)	d (f8/h9)	L (+0.2)	H	Material	Mould No.
E07050L531	63.50	50.80	6.00	5.00	PU	PUC-731
E070501017	63.50	50.80	10.50	9.50	NBR	SUC-1525
E070538901	63.50	53.30	6.20	5.20	PU	PUC-1325
E070531126	63.50	53.50	7.00	6.00	NBR	SUC-2574
E070531113	63.50	53.80	6.00	5.00	NBR	SUC-1310
E070531125	63.50	53.85	5.75	4.75	NBR	SUC-2466
E070536603	63.50	53.97	5.76	4.76	FKM	SUC-394
E070536706	63.50	53.97	10.52	9.52	FKM	SUC-1513
E070531119	63.50	53.98	5.75	4.75	NBR	SUC-1706
E07053L520	63.50	53.98	7.35	6.35	PU	PUC-1350
E07053L521	63.50	53.98	8.93	7.93	PU	PUC-1353
E070401158	64.00	40.00	13.00	12.00	NBR	SUC-2506
E070461106	64.00	46.00	10.00	9.00	NBR	SUC-924
E070482201	64.00	48.00	9.00	8.00	CR	SUC-2401
E07048V301	64.00	48.00	10.50	9.50	NBR	SUC-2137
E07048L516	64.00	48.00	12.50	11.50	PU	PUC-1275
E07050L571	64.00	50.00	7.00	6.00	PU	PUC-1383
E07052L501	64.00	52.00	11.00	10.00	PU	PUC-433
E07055L513	64.00	55.00	6.00	5.00	PU	PUC-575
E070551122	64.00	55.00	7.20	6.20	NBR	SUC-1986
E070586701	64.00	58.40	7.00	6.00	FKM	SUC-1852
E07035L501	**65.00**	**35.00**	**16.00**	**15.00**	**PU**	**PUC-363**
E070401128	65.00	40.00	11.00	10.00	NBR	SUC-1263
E07040L513	**65.00**	**40.00**	**11.00**	**10.00**	**PU**	**PUC-226**
E07040L506	**65.00**	**40.00**	**13.00**	**12.00**	**PU**	**PUC-224**
E070456701	65.00	45.00	11.00	10.00	FKM	SUC-1642
E07045L513	**65.00**	**45.00**	**11.00**	**10.00**	**PU**	**PUC-368**
E070451142	65.00	45.00	11.00	10.00	NBR	SUC-2746
E07045L516	**65.00**	**45.00**	**13.00**	**12.00**	**PU**	**PUC-382**
E070471105	65.00	47.00	10.00	9.00	NBR	SUC-1218
E070471106	65.00	47.00	11.00	10.00	NBR	SUC-1243
E07050L512	**65.00**	**50.00**	**8.00**	**7.00**	**PU**	**PUC-384**
E07050L512	65.00	50.00	8.00	7.00	PU	PUC-1033
E07050L543	65.00	50.00	10.00	9.00	PU	PUC-930
E070504503	65.00	50.00	10.00	9.00	VMQ	SUC-1916
E070506706	65.00	50.00	11.00	10.00	FKM	SUC-1185
E070501141	65.00	50.00	11.00	10.00	NBR	SUC-1272
E07050L504	**65.00**	**50.00**	**11.00**	**10.00**	**PU**	**PUC-242**
E07050L505	**65.00**	**50.00**	**12.40**	**11.40**	**PU**	**PUC-319**
E07050L505	65.00	50.00	12.40	11.40	PU	PUC-887
E070506711	65.00	50.00	12.50	11.50	FKM	SUC-1414
E07050L540	65.00	50.00	13.00	12.00	PU	PUC-918
E070516701	65.00	51.00	11.00	10.00	FKM	SUC-1472
E070531120	65.00	53.00	6.00	5.00	NBR	SUC-1955
E07053L522	65.00	53.00	7.00	6.00	PU	PUC-1359
E07053L512	65.00	53.00	7.50	6.50	PU	PUC-623
E07053L506	65.00	53.00	9.00	8.00	PU	PUC-417
E070546601	65.00	54.00	8.30	7.30	FKM	SUC-935
E07055L516	65.00	55.00	5.00	4.00	PU	PUC-733
E070551124	65.00	55.00	5.00	4.00	NBR	SUC-2303
E07055L515	65.00	55.00	6.00	5.00	PU	PUC-735
E070556701	65.00	55.00	7.00	6.00	FKM	SUC-1745

Bold sizes are readily available in stock.
Other materials are available on request.

E07

Single Acting Symmetrical Seal

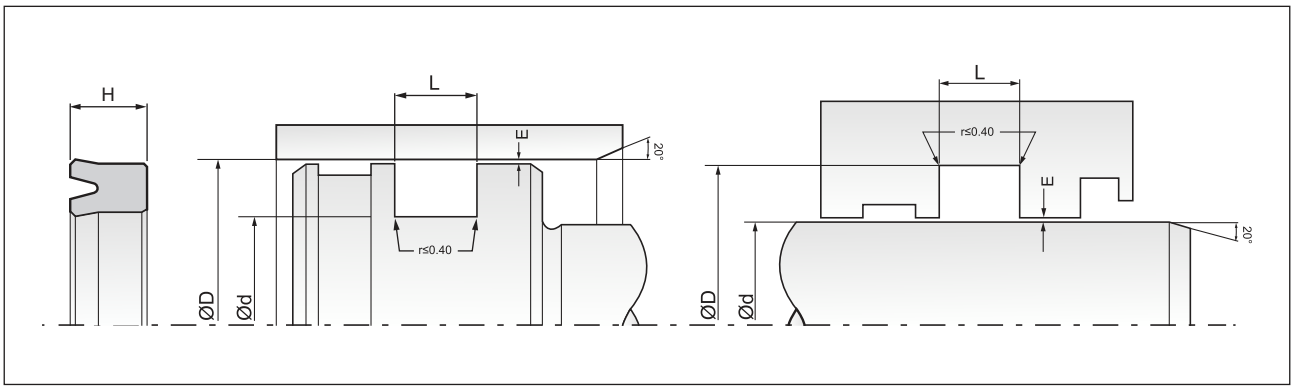

Part No.	D (H10)	d (f8/h9)	L (+0.2)	H	Material	Mould No.
E07055L512	65.00	55.00	7.00	6.00	PU	PUC-882
E070551101	65.00	55.00	7.00	6.00	NBR	SUC-2153
E07055L512	**65.00**	**55.00**	**7.00**	**6.00**	**PU**	**PUC-135**
E070551004	65.00	55.00	7.20	6.20	NBR	SUC-2717
E07055L510	65.00	55.00	7.50	6.50	PU	PUC-465
E070556603	65.00	55.00	8.00	7.00	FKM	SUC-1840
E07055L525	65.00	55.00	8.00	7.00	PU	PUC-1446
E070551126	65.00	55.00	8.30	7.30	NBR	SUC-2760
E07055L503	**65.00**	**55.00**	**9.00**	**8.00**	**PU**	**PUC-385**
E070556605	65.00	55.00	9.00	8.00	FKM	SUC-2142
E070551127	65.00	55.00	9.00	8.00	NBR	SUC-2768
E070556602	65.00	55.00	11.00	10.00	FKM	SUC-1832
E07055L504	**65.00**	**55.00**	**11.00**	**10.00**	**PU**	**PUC-386**
E07055L504	65.00	55.00	11.00	10.00	PU	PUC-1036
E070551128	65.00	55.00	11.00	10.00	NBR	SUC-2761
E070551121	65.00	55.00	12.00	11.00	NBR	SUC-1559
E07055L502	**65.00**	**55.00**	**13.00**	**12.00**	**PU**	**PUC-287**
E07056L517	65.00	56.00	11.00	10.00	PU	PUC-1292
E070581102	65.00	58.00	6.00	5.00	NBR	SUC-2239
E070566707	65.50	56.00	7.00	6.00	FKM	SUC-1914
E070566501	65.65	56.00	7.35	6.35	FKM	SUC-135
E070481101	66.00	48.00	11.00	10.00	NBR	SUC-2321
E070501142	66.00	50.00	9.00	8.00	NBR	SUC-1355
E07050L513	**66.00**	**50.00**	**11.00**	**10.00**	**PU**	**PUC-396**
E070556606	66.00	55.00	9.00	8.00	FKM	SUC-2281
E07055L523	66.00	55.00	11.00	10.00	PU	PUC-1269
E070566602	66.00	56.00	6.50	5.50	FKM	SUC-1235
E070566704	66.00	56.00	7.00	6.00	FKM	SUC-1323
E07056L507	66.00	56.00	7.00	6.00	PU	PUC-496
E070561101	66.00	56.00	7.00	6.00	NBR	SUC-1103
E070566708	66.00	56.00	7.00	6.00	FKM	SUC-2831
E070562201	66.00	56.00	7.50	6.50	CR	SUC-2390
E070561120	66.00	56.00	8.00	7.00	NBR	SUC-1135
E07056L509	66.00	56.00	8.00	7.00	PU	PUC-541
E07056L511	66.00	56.00	8.50	7.50	PU	PUC-607
E07056L508	66.00	56.00	9.00	8.00	PU	PUC-521
E07056L502	**66.00**	**56.00**	**11.00**	**10.00**	**PU**	**PUC-320**
E070566606	66.00	56.00	12.00	11.00	FKM	SUC-1620
E070561008	66.00	56.00	12.00	11.00	NBR	SUC-2312
E07057L505	66.54	57.15	7.35	6.35	PU	PUC-1328
E07050L568	66.67	50.80	13.70	12.70	PU	PUC-1354
E070571113	66.70	57.20	10.50	9.50	NBR	SUC-1274
E070501139	67.00	50.00	9.00	8.00	NBR	SUC-1226
E070501019	67.00	50.00	9.00	8.00	NBR	SUC-1863
E07053L519	67.00	53.00	7.00	6.00	PU	PUC-1256
E070551109	67.00	55.00	7.00	6.00	NBR	SUC-125
E07055L520	67.00	55.00	11.00	10.00	PU	PUC-1060
E070561119	67.00	56.00	7.00	6.00	NBR	SUC-1137
E070571112	67.00	57.00	7.00	6.00	NBR	SUC-1138
E07045L514	**68.00**	**45.00**	**13.00**	**12.00**	**PU**	**PUC-995**
E070500803	68.00	50.00	14.00	13.00	NBR	SUC-2791
E070536707	68.00	53.00	11.00	10.00	FKM	SUC-115

Part No.	D (H10)	d (f8/h9)	L (+0.2)	H	Material	Mould No.
E070551119	68.00	55.00	7.50	6.50	NBR	SUC-1183
E07055L514	68.00	55.00	9.00	8.00	PU	PUC-684
E07055L505	**68.00**	**55.00**	**11.00**	**10.00**	**PU**	**PUC-387**
E07055L505	68.00	55.00	11.00	10.00	PU	PUC-1032
E0705611024	68.00	56.00	9.00	8.00	NBR	SUC-458
E070571114	68.00	57.00	14.00	13.00	NBR	SUC-2367
E07058L505	68.00	58.00	7.00	6.00	PU	PUC-679
E070586601	68.00	58.00	8.00	7.00	FKM	SUC-1826
E07058L506	68.00	58.00	10.00	9.00	PU	PUC-698
E07058L504	68.00	58.00	10.50	9.50	PU	PUC-605
E07060L517	68.00	60.00	7.00	6.00	PU	PUC-734
E070606711	68.00	60.00	7.00	6.00	FKM	SUC-2188
E07060L515	68.00	60.00	8.00	7.00	PU	PUC-736
E07060L514	68.00	60.00	9.00	8.00	PU	PUC-722
E070606706	68.00	60.00	9.00	8.00	FKM	SUC-1401
E07060L536	68.00	60.00	11.00	10.00	PU	PUC-737
E070601135	68.00	60.00	11.00	10.00	NBR	SUC-1821
E070606609	68.00	60.00	13.00	12.00	FKM	SUC-1670
E07030L537	68.50	30.00	16.00	15.00	PU	PUC-854
E070511001	69.00	51.80	10.00	9.00	NBR	SUC-2577
E070531116	69.00	53.00	10.00	9.00	NBR	SUC-1474
E07060L537	69.00	60.00	7.00	6.00	PU	PUC-1257
E070501108	69.85	50.80	10.52	9.52	NBR	SUC-838
E07050L522	69.85	50.80	10.52	9.52	PU	PUC-494
E070501153	69.85	50.80	11.00	10.00	NBR	SUC-2267
E070501025	69.85	50.80	13.70	12.70	NBR	SUC-2709
E07057L503	69.85	57.15	8.94	7.94	PU	PUC-617
E07057L504	69.85	57.15	10.00	9.00	PU	PUC-738
E070571107	69.85	57.15	10.52	9.52	NBR	SUC-1114
E07030L526	70.00	30.00	7.00	6.00	PU	PUC-608
E070401165	70.00	40.00	13.00	12.00	NBR	SUC-2748
E070451127	70.00	45.00	7.00	6.00	NBR	SUC-1147
E07045L522	70.00	45.00	13.00	12.00	PU	PUC-418
E07045L546	70.00	45.00	16.00	15.00	PU	PUC-1109
E07045L547	70.00	45.00	17.00	16.00	PU	PUC-1131
E070496601	70.00	49.00	11.00	10.00	FKM	SUC-1495
E07050L528	70.00	50.00	10.80	9.80	PU	PUC-686
E070506708	70.00	50.00	11.00	10.00	FKM	SUC-1270
E07050L514	**70.00**	**50.00**	**11.00**	**10.00**	**PU**	**PUC-302**
E070501163	70.00	50.00	11.00	10.00	NBR	SUC-2759
E07050L501	**70.00**	**50.00**	**12.00**	**11.00**	**PU**	**PUC-478**
E07050L556	70.00	50.00	12.50	11.50	PU	PUC-1097
E070501149	70.00	50.00	13.00	12.00	NBR	SUC-904
E07050L519	70.00	50.00	13.00	12.00	PU	PUC-886
E07050L519	**70.00**	**50.00**	**13.00**	**12.00**	**PU**	**PUC-118**
E070500802	70.00	50.00	14.00	13.00	NBR	SUC-2792
E07050L515	70.00	50.00	15.00	14.00	PU	PUC-986
E070541101	70.00	54.00	9.00	8.00	NBR	SUC-200
E07054L503	70.00	54.00	13.00	12.00	PU	PUC-914
E070541104	70.00	54.00	13.00	12.00	NBR	SUC-2542
E07055L506	**70.00**	**55.00**	**8.00**	**7.00**	**PU**	**PUC-388**
E070551110	70.00	55.00	9.00	8.00	NBR	SUC-245

Bold sizes are readily available in stock.
Other materials are available on request.

E07

Single Acting Symmetrical Seal

MAX SPARE LIMITED
QUALITY. PRECISION. SPEED.

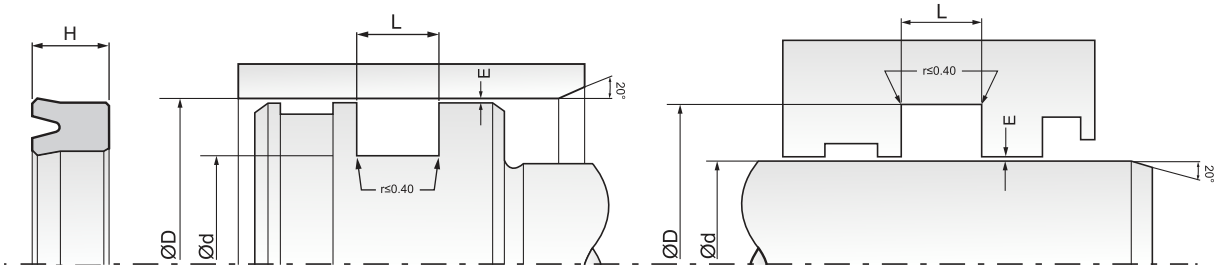

Part No.	D (H10)	d (f8/h9)	L (+0.2)	H	Material	Mould No.
E070551107	70.00	55.00	11.00	10.00	NBR	SUC-2089
E07055L517	70.00	55.00	11.00	10.00	PU	PUC-274
E07055L519	70.00	55.00	12.50	11.50	PU	PUC-1018
E07055L509	**70.00**	**55.00**	**13.00**	**12.00**	**PU**	**PUC-273**
E070566706	70.00	56.00	7.00	6.00	FKM	SUC-1379
E07056L503	**70.00**	**56.00**	**9.00**	**8.00**	**PU**	**PUC-389**
E07056L516	70.00	56.00	10.00	9.00	PU	PUC-1219
E070561122	70.00	56.00	11.00	10.00	NBR	SUC-1227
E07056L504	**70.00**	**56.00**	**11.00**	**10.00**	**PU**	**PUC-339**
E070562202	70.00	56.00	11.00	10.00	CR	SUC-2571
E070566608	70.00	56.00	11.00	10.00	FKM	SUC-2556
E070566702	70.00	56.00	13.00	12.00	FKM	SUC-601
E07057L501	70.00	57.00	11.00	10.00	PU	PUC-426
E070588901	70.00	58.00	7.00	6.00	PU	PUC-1376
E07058L507	70.00	58.00	15.00	14.00	PU	PUC-813
E07058L503	70.00	58.40	15.50	14.50	PU	PUC-530
E07060L520	70.00	60.00	5.00	4.00	PU	PUC-794
E07060L513	70.00	60.00	6.80	5.80	PU	PUC-591
E070606701	70.00	60.00	7.00	6.00	FKM	SUC-1104
E070606403	70.00	60.00	7.00	6.00	FKM	SUC-1726
E070601101	70.00	60.00	7.00	6.00	NBR	SUC-1184
E07060L506	**70.00**	**60.00**	**7.00**	**6.00**	**PU**	**PUC-313**
E070604301	70.00	60.00	7.00	6.00	VMQ	SUC-2340
E070605901	70.00	60.00	7.00	6.00	PU	PUC-1331
E0706066100	70.00	60.00	7.30	6.30	FKM	SUC-1686
E070601140	70.00	60.00	8.00	7.00	NBR	SUC-2762
E07060L503	**70.00**	**60.00**	**8.20**	**7.20**	**PU**	**PUC-321**
E07060L525	70.00	60.00	8.50	7.50	PU	PUC-973
E07060L522	70.00	60.00	8.70	7.70	PU	PUC-832
E07060L512	**70.00**	**60.00**	**9.00**	**8.00**	**PU**	**PUC-839**
E070601116	70.00	60.00	9.00	8.00	NBR	SUC-301
E070601141	70.00	60.00	9.00	8.00	NBR	SUC-2763
E07060L535	70.00	60.00	10.00	9.00	PU	PUC-562
E070605926	70.00	60.00	10.00	9.00	PU	PUC-1278
E070606705	70.00	60.00	11.00	10.00	FKM	SUC-1318
E070601133	70.00	60.00	11.00	10.00	NBR	SUC-1582
E07060L501	**70.00**	**60.00**	**11.00**	**10.00**	**PU**	**PUC-198**
E070601142	70.00	60.00	11.00	10.00	NBR	SUC-2764
E070606704	70.00	60.00	13.00	12.00	FKM	SUC-1319
E07060L511	**70.00**	**60.00**	**13.00**	**12.00**	**PU**	**PUC-329**
E070621111	70.00	62.00	11.00	10.00	NBR	SUC-1467
E07062L507	70.00	62.00	11.00	10.00	PU	PUC-877
E07063L503	**70.00**	**63.00**	**6.00**	**5.00**	**PU**	**PUC-391**
E070651004	70.00	65.00	11.00	10.00	NBR	SUC-1384
E070308301	70.50	30.00	6.00	5.00	NBR/FABRIC	SUC-1485
E070566603	71.00	56.00	9.00	8.00	FKM	SUC-1364
E070561004	71.00	56.00	9.50	8.50	NBR	SUC-366
E07056L515	71.00	56.00	10.50	9.50	PU	PUC-1201
E07056L505	**71.00**	**56.00**	**11.00**	**10.00**	**PU**	**PUC-398**
E070566607	71.00	56.00	11.00	10.00	FKM	SUC-2249
E070566705	71.00	56.00	12.00	11.00	FKM	SUC-1358
E070561129	71.00	56.00	12.00	11.00	NBR	SUC-2662

Part No.	D (H10)	d (f8/h9)	L (+0.2)	H	Material	Mould No.
E070566605	71.00	56.00	12.50	11.50	FKM	SUC-1455
E07056L501	**71.00**	**56.00**	**12.50**	**11.50**	**PU**	**PUC-322**
E070561010	71.00	56.00	13.50	12.50	NBR	SUC-2552
E07060L541	71.00	60.00	8.00	7.00	PU	PUC-1355
E07061L501	71.00	61.00	7.00	6.00	PU	PUC-1108
E07061L502	71.00	61.00	7.50	6.50	PU	PUC-1351
E070631121	71.44	63.50	7.35	6.35	NBR	SUC-1560
E070631116	71.50	63.50	10.00	9.00	NBR	SUC-1136
E070481107	72.00	48.00	13.00	12.00	NBR	SUC-1129
E070501140	72.00	50.00	7.50	6.50	NBR	SUC-1269
E070504301	72.00	50.00	11.00	10.00	VMQ	SUC-1675
E070501105	72.00	50.00	11.00	10.00	NBR	SUC-2341
E070506709	72.00	50.00	13.00	12.00	FKM	SUC-1332
E07050L547	72.00	50.00	13.00	12.00	PU	PUC-989
E07052L505	72.00	52.00	11.00	10.00	PU	PUC-1111
E070521112	72.00	52.00	13.00	12.00	NBR	SUC-1439
E07052L504	72.00	52.00	13.50	12.50	PU	PUC-873
E070556607	72.00	55.00	11.00	10.00	FKM	SUC-2813
E070560902	72.00	56.00	9.50	8.50	NBR	SUC-1572
E070561121	72.00	56.00	11.00	10.00	NBR	SUC-1167
E070561118	72.00	56.00	13.00	12.00	NBR	SUC-1125
E070573401	72.00	57.50	10.00	9.00	EPDM	SUC-2339
E07058L508	72.00	58.00	15.00	14.00	PU	PUC-1070
E070608902	72.00	60.00	7.00	6.00	PU	PUC-1100
E070606703	72.00	60.00	8.00	7.00	FKM	SUC-1311
E070600801	72.00	60.00	10.00	9.00	NBR	SUC-1814
E07060L401	72.00	60.00	11.00	10.00	PU	PUC-1068
E07060L530	72.00	60.00	11.00	10.00	PU	PUC-1112
E070601131	72.00	60.00	12.00	11.00	NBR	SUC-1157
E07062L510	72.00	62.00	7.00	6.00	PU	PUC-1228
E07062L502	**72.00**	**62.00**	**9.00**	**8.00**	**PU**	**PUC-390**
E07062L508	72.00	62.00	11.00	10.00	PU	PUC-1023
E07062L505	72.00	62.00	13.00	12.00	PU	PUC-179
E07062L511	72.00	62.50	8.80	7.80	PU	PUC-1280
E07064L503	72.00	64.00	13.00	12.00	PU	PUC-1065
E07072L505	72.89	50.80	10.39	9.39	PU	PUC-1347
E07040L550	73.00	40.00	13.00	12.00	PU	PUC-1227
E07053L502	**73.00**	**53.00**	**13.00**	**12.00**	**PU**	**PUC-137**
E07053L502	73.00	53.00	13.00	12.00	PU	PUC-1133
E07055L522	73.00	55.00	11.00	10.00	PU	PUC-1229
E070611101	73.00	61.00	7.00	6.00	NBR	SUC-2405
E070610501	73.00	61.00	9.00	8.00	FKM	SUC-1447
E07063L502	73.00	63.00	7.00	6.00	PU	PUC-161
E070636705	73.00	63.00	7.00	6.00	FKM	SUC-2414
E07063L504	**73.00**	**63.00**	**9.00**	**8.00**	**PU**	**PUC-392**
E07063L505	**73.00**	**63.00**	**11.00**	**10.00**	**PU**	**PUC-393**
E070655901	73.00	65.00	7.00	6.00	PU	PUC-858
E07065L512	73.00	65.00	7.00	6.00	PU	PUC-425
E070631003	73.03	63.00	5.77	4.77	NBR	SUC-1729
E07063L520	73.03	63.50	10.52	9.52	PU	PUC-1113
E070626601	73.66	62.85	7.35	6.35	FKM	SUC-1934
E070501137	74.00	50.00	13.00	12.00	NBR	SUC-1120

Bold sizes are readily available in stock.
Other materials are available on request.

E07

Single Acting Symmetrical Seal

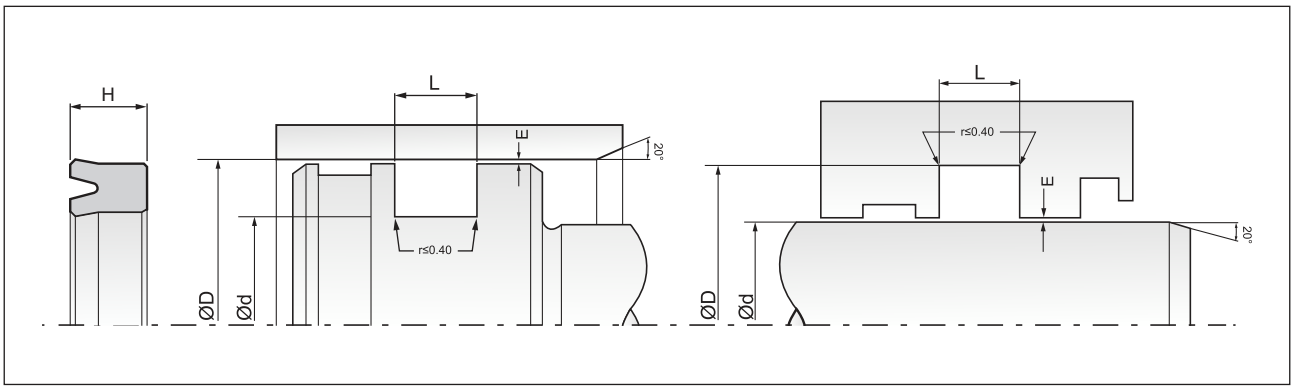

Part No.	D (H10)	d (f8/h9)	L (+0.2)	H	Material	Mould No.
E070541102	74.00	54.00	10.50	9.50	NBR	SUC-2337
E070561126	74.00	56.00	11.00	10.00	NBR	SUC-1768
E070568701	74.00	56.00	13.00	12.00	PU	PUC-1334
E070581101	74.00	58.00	8.30	7.30	NBR	SUC-1869
E07062L401	74.00	62.00	9.00	8.00	PU	PUC-1158
E070621003	74.00	62.00	15.00	14.00	NBR	SUC-1450
E070581001	74.61	58.73	13.70	12.70	NBR	SUC-1571
E07035L529	75.00	35.00	15.00	14.00	PU	PUC-611
E070455902	75.00	45.00	20.50	19.50	PU	PUC-690
E07050L535	75.00	50.00	16.00	15.00	PU	PUC-826
E070541103	75.00	54.00	11.00	10.00	NBR	SUC-2406
E070551125	75.00	55.00	10.00	9.00	NBR	SUC-2720
E07055L508	**75.00**	**55.00**	**11.00**	**10.00**	**PU**	**PUC-197**
E07055L518	75.00	55.00	12.00	11.00	PU	PUC-993
E07055L501	75.00	55.00	13.00	12.00	PU	PUC-892
E07055L501	**75.00**	**55.00**	**13.00**	**12.00**	**PU**	**PUC-136**
E070561128	75.00	56.00	8.00	7.00	NBR	SUC-2435
E07058L509	75.00	58.00	13.00	12.00	PU	PUC-1356
E07058L502	75.00	58.00	13.50	12.50	PU	PUC-502
E07059L501	75.00	59.00	13.00	12.00	PU	PUC-518
E070606607	75.00	60.00	7.00	6.00	FKM	SUC-1657
E070601132	75.00	60.00	9.00	8.00	NBR	SUC-1483
E07060L526	75.00	60.00	9.00	8.00	PU	PUC-1056
E07060L524	75.00	60.00	10.00	9.00	PU	PUC-913
E070606615	75.00	60.00	10.00	9.00	FKM	SUC-2422
E070606604	75.00	60.00	11.00	10.00	FKM	SUC-1527
E070601128	75.00	60.00	11.00	10.00	NBR	SUC-1094
E07060L509	75.00	60.00	11.00	10.00	PU	PUC-277
E070606032	**75.00**	**60.00**	**11.00**	**10.00**	**PU**	**PUC-1338**
E070606404	75.00	60.00	12.00	11.00	FKM	SUC-114
E07060L505	**75.00**	**60.00**	**12.00**	**11.00**	**PU**	**PUC-110**
E07060L533	75.00	60.00	12.50	11.50	PU	PUC-1218
E07060L507	75.00	60.00	13.00	12.00	PU	PUC-419
E070606714	75.00	60.00	13.00	12.00	FKM	SUC-2490
E070616701	75.00	61.50	14.50	13.50	FKM	SUC-2170
E07062L509	75.00	62.00	9.00	8.00	PU	PUC-1082
E070633401	75.00	63.00	9.50	8.50	EPDM	SUC-1669
E070636702	75.00	63.00	9.50	8.50	FKM	SUC-1788
E07063L512	**75.00**	**63.00**	**9.50**	**8.50**	**PU**	**PUC-400**
E07063L512	75.00	63.00	9.50	8.50	PU	PUC-1074
E07063L524	75.00	63.00	9.70	8.70	PU	PUC-1052
E07063L506	**75.00**	**63.00**	**11.00**	**10.00**	**PU**	**PUC-395**
E070636607	75.00	63.00	13.00	12.00	FKM	SUC-2555
E070636606	75.00	63.00	15.00	14.00	FKM	SUC-2554
E07065L527	75.00	65.00	6.00	5.00	PU	PUC-795
E07065L510	**75.00**	**65.00**	**7.00**	**6.00**	**PU**	**PUC-105**
E07065L510	**75.00**	**65.00**	**7.00**	**6.00**	**PU**	**PUC-105**
E070651124	75.00	65.00	7.00	6.00	NBR	SUC-1648
E07065L510	**75.00**	**65.00**	**7.00**	**6.00**	**PU**	**PUC-105**
E07065L519	75.00	65.00	8.00	7.00	PU	PUC-746
E07065L505	**75.00**	**65.00**	**9.00**	**8.00**	**PU**	**PUC-399**
E07065L505	75.00	65.00	9.00	8.00	PU	PUC-985

Part No.	D (H10)	d (f8/h9)	L (+0.2)	H	Material	Mould No.
E070651129	75.00	65.00	9.00	8.00	NBR	SUC-2765
E070651103	75.00	65.00	9.75	8.75	NBR	SUC-875
E07065L522	75.00	65.00	10.00	9.00	PU	PUC-841
E07065L525	75.00	65.00	11.00	10.00	PU	PUC-793
E070656704	75.00	65.00	12.00	11.00	FKM	SUC-1610
E07065L501	**75.00**	**65.00**	**12.40**	**11.40**	**PU**	**PUC-401**
E070656702	75.00	65.00	13.00	12.00	FKM	SUC-1333
E07065L511	**75.00**	**65.00**	**13.00**	**12.00**	**PU**	**PUC-280**
E07067L502	75.00	67.00	12.00	11.00	PU	PUC-501
E07063L521	75.20	63.50	11.00	10.00	PU	PUD-715
E070501138	76.00	50.00	16.00	15.00	NBR	SUD-861
E070521113	76.00	52.00	16.00	15.00	NBR	SUD-1114
E070606602	76.00	60.00	9.00	8.00	FKM	SUD-287
E070606614	76.00	60.00	10.00	9.00	FKM	SUD-1834
E070608901	76.00	60.00	10.00	9.00	PU	PUD-871
E070601137	76.00	60.00	10.00	9.00	NBR	SUD-1944
E07060L526	76.00	60.00	11.00	10.00	PU	PUD-897
E07063L517	76.00	63.00	7.00	6.00	PU	PUD-630
E07065L515	76.00	65.00	7.00	6.00	PU	PUD-463
E07065L533	76.00	65.00	9.00	8.00	PU	PUD-917
E07065L532	76.00	65.00	10.00	9.00	PU	PUD-911
E070666601	76.00	66.00	9.00	8.00	FKM	SUD-1730
E070681003	76.00	68.00	7.50	6.50	NBR	SUD-1045
E07050L521	76.20	50.80	13.70	12.70	PU	PUD-400
E070561005	76.20	56.60	10.50	9.50	NBR	SUD-840
E070576602	76.20	57.15	10.65	9.65	FKM	SUD-2066
E070636701	76.20	63.50	7.35	6.35	FKM	SUD-1247
E070631118	76.20	63.50	8.00	7.00	NBR	SUD-963
E07063L526	76.20	63.50	8.21	7.21	PU	PUD-1055
E07063L519	76.20	63.50	8.93	7.93	PU	PUD-923
E070636602	76.20	63.50	10.40	9.40	FKM	SUD-839
E070631117	76.20	63.50	10.52	9.52	NBR	SUD-921
E07063L518	76.20	63.50	11.00	10.00	PU	PUD-631
E070651128	76.20	65.07	6.56	5.56	NBR	SUD-1884
E070656708	76.20	65.07	6.56	5.56	FKM	SUD-1885
E07040L519	76.83	40.43	10.52	9.52	PU	PUD-528
E07062L504	77.00	62.00	13.00	12.00	PU	PUD-343
E070621110	77.00	62.00	13.00	12.00	NBR	SUD-1022
E070631006	77.00	63.00	10.50	9.50	NBR	SUD-2100
E070651118	77.00	65.00	6.50	5.50	NBR	SUD-802
E070671108	77.00	67.00	11.00	10.00	NBR	SUD-1722
E07070L514	77.00	70.00	8.00	7.00	PU	PUD-443
E070541001	77.80	54.00	12.00	11.00	NBR	SUD-1338
E07050L534	78.00	50.00	15.00	14.00	PU	PUD-695
E070604601	78.00	60.00	11.00	10.00	VMQ	SUD-1581
E070621112	78.00	62.00	9.00	8.00	NBR	SUD-1785
E07063L507	**78.00**	**63.00**	**9.00**	**8.00**	**PU**	**PUD-352**
E07063L507	78.00	63.00	9.00	8.00	PU	PUD-845
E07063L519	78.00	63.00	11.00	10.00	PU	PUD-632
E070631002	78.00	63.00	11.00	10.00	NBR	SUD-829
E070636605	78.00	63.00	12.00	11.00	FKM	SUD-1616
E07078L510	78.00	63.00	12.00	11.00	PU	PUD-1143

Bold sizes are readily available in stock.
Other materials are available on request.

E07

Single Acting Symmetrical Seal

MAX SPARE LIMITED
QUALITY. PRECISION. SPEED.

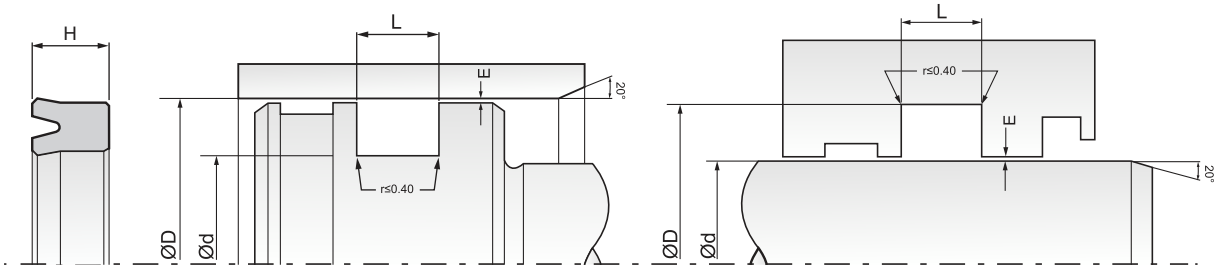

Part No.	D (H10)	d (f8/h9)	L (+0.2)	H	Material	Mould No.
E07063L522	78.00	63.00	12.50	11.50	PU	PUD-760
E070636704	78.00	63.00	12.50	11.50	FKM	SUD-1398
E070636603	78.00	63.00	12.50	11.50	FKM	SUD-1105
E07063L520	78.00	63.00	13.00	12.00	PU	PUD-633
E070636703	78.00	63.88	9.25	8.25	FKM	SUD-1372
E070641001	78.00	64.00	9.50	8.50	NBR	SUD-1262
E070656703	78.00	65.00	9.00	8.00	FKM	SUD-1211
E07067L501	78.00	67.90	15.00	14.00	PU	PUD-390
E07068L507	78.00	68.00	8.00	7.00	PU	PUD-914
E07068L509	78.00	68.00	8.30	7.30	PU	PUD-1005
E07068L503	78.00	68.00	9.00	8.00	PU	PUD-517
E07068L511	78.00	68.00	13.00	12.00	PU	PUD-1088
E07070L527	78.00	70.00	5.00	4.00	PU	PUD-582
E07070L505	78.00	70.00	13.50	12.50	PU	PUD-334
E070706625	79.00	70.00	7.00	6.00	FKM	SUD-1887
E07070L512	79.00	70.00	9.00	8.00	PU	PUD-416
E070691106	79.25	69.85	5.57	4.57	NBR	SUD-1902
E070601102	79.37	60.32	10.52	9.52	NBR	SUD-1351
E07063L514	79.37	63.50	10.52	9.52	PU	PUD-409
E07066L501	79.38	66.67	10.52	9.52	PU	PUD-872
E070661106	79.38	66.88	7.36	6.36	NBR	SUD-1077
E07065L528	79.50	65.00	9.70	8.70	PU	PUD-722
E07035L523	80.00	35.00	11.00	10.00	PU	PUD-460
E070401142	80.00	40.00	21.00	20.00	NBR	SUD-1203
E07050L561	80.00	50.00	11.00	10.00	PU	PUD-1013
E070556401	80.00	55.00	13.00	12.00	FKM	SUD-914
E07055L511	80.00	55.00	15.00	14.00	PU	PUD-464
E070551112	80.00	55.00	16.00	15.00	NBR	SUD-770
E070601105	80.00	60.00	9.00	8.00	NBR	SUD-1806
E070601006	80.00	60.00	11.00	10.00	NBR	SUD-1417
E07060L508	**80.00**	**60.00**	**11.00**	**10.00**	**PU**	**PUD-198**
E070606702	80.00	60.00	11.00	10.00	FKM	SUD-876
E070601007	80.00	60.00	11.50	10.50	NBR	SUD-1574
E07060L523	80.00	60.00	12.00	11.00	PU	PUD-749
E070601136	80.00	60.00	12.40	11.40	NBR	SUD-1526
E07060L538	80.00	60.00	12.50	11.50	PU	PUD-1056
E07060L502	**80.00**	**60.00**	**13.00**	**12.00**	**PU**	**PUD-101**
E070606708	80.00	60.00	13.00	12.00	FKM	SUD-593
E070601112	80.00	60.00	13.00	12.00	NBR	SUD-971
E07060L502	80.00	60.00	13.00	12.00	PU	PUD-696
E070606710	80.00	60.00	14.00	13.00	FKM	SUD-1666
E07060L518	80.00	60.00	15.50	14.50	PU	PUD-647
E070601108	80.00	60.00	16.00	15.00	NBR	SUD-777
E070611001	80.00	61.00	13.00	12.00	NBR	SUD-317
E070621113	80.00	62.00	10.00	9.00	NBR	SUD-1844
E07062L501	80.00	62.00	14.00	13.00	PU	PUD-337
E07063L523	80.00	63.00	10.00	9.00	PU	PUD-868
E07063L508	80.00	63.00	11.00	10.00	PU	PUD-850
E07063L508	**80.00**	**63.00**	**11.00**	**10.00**	**PU**	**PUD-353**
E070631005	80.00	63.00	11.00	10.00	NBR	SUD-1894
E070630802	80.00	63.00	11.00	10.00	NBR	SUD-1997
E07063L509	80.00	63.00	13.00	12.00	PU	PUD-350

Part No.	D (H10)	d (f8/h9)	L (+0.2)	H	Material	Mould No.
E07063L509	**80.00**	**63.00**	**13.00**	**12.00**	**PU**	**PUD-351**
E070632204	80.00	63.00	13.50	12.50	CR	SUD-1959
E070638901	80.00	63.00	16.00	15.00	PU	PUD-483
E07063L525	80.00	63.97	10.60	9.60	PU	PUD-1014
E070646601	80.00	64.00	9.00	8.00	FKM	SUD-298
E070641101	80.00	64.00	9.00	8.00	NBR	SUD-390
E070656706	80.00	65.00	7.00	6.00	FKM	SUD-1382
E07065L517	80.00	65.00	7.00	6.00	PU	PUD-634
E07065L506	**80.00**	**65.00**	**10.00**	**9.00**	**PU**	**PUD-356**
E070651120	80.00	65.00	10.00	9.00	NBR	SUD-1031
E070656602	80.00	65.00	10.00	9.00	FKM	SUD-2044
E07065L507	**80.00**	**65.00**	**11.00**	**10.00**	**PU**	**PUD-355**
E070654301	80.00	65.00	11.00	10.00	VMQ	SUD-1287
E070651102	80.00	65.00	11.00	10.00	NBR	SUD-1296
E070651104	80.00	65.00	11.00	10.00	NBR	SUD-1792
E07065L401	80.00	65.00	13.00	12.00	PU	PUD-887
E07065L503	80.00	65.00	13.00	12.00	PU	PUD-852
E070656705	80.00	65.00	13.00	12.00	FKM	SUD-1268
E07065L520	80.00	65.00	13.00	12.00	PU	PUD-669
E07065L503	**80.00**	**65.00**	**13.00**	**12.00**	**PU**	**PUD-300**
E070656707	80.00	65.00	16.00	15.00	FKM	SUD-1394
E070661103	80.00	66.00	9.00	8.00	NBR	SUD-716
E070671106	80.00	67.00	7.00	6.00	NBR	SUD-1171
E07067L504	80.00	67.00	8.50	7.50	PU	PUD-758
E070671105	80.00	67.00	9.00	8.00	NBR	SUD-941
E070671107	80.00	67.00	14.00	13.00	NBR	SUD-1520
E07067L505	80.00	67.00	14.00	13.00	PU	PUD-794
E070676601	80.00	67.30	8.00	7.00	FKM	SUD-1816
E07068V201	80.00	68.00	7.00	6.00	NBR	SUD-1976
E070686705	80.00	68.00	8.00	7.00	FKM	SUD-1569
E070681101	80.00	68.00	8.00	7.00	NBR	SUD-850
E07068L501	80.00	68.00	9.00	8.00	PU	PUD-424
E070681102	80.00	68.00	9.00	8.00	NBR	SUD-1828
E070686701	80.00	68.00	9.50	8.50	FKM	SUD-1315
E070681001	80.00	68.00	9.50	8.50	NBR	SUD-1212
E070686704	80.00	68.00	10.00	9.00	FKM	SUD-1202
E070680801	80.00	68.00	10.00	9.00	NBR	SUD-1364
E07068L504	80.00	68.00	10.00	9.00	PU	PUD-922
E070686706	80.00	68.00	10.00	9.00	FKM	SUD-1871
E07068L510	80.00	68.00	13.00	12.00	PU	PUD-1060
E07068L504	**80.00**	**68.00**	**15.00**	**14.00**	**PU**	**PUD-689**
E070686702	80.00	68.00	15.00	14.00	FKM	SUD-1103
E070681102	80.00	68.00	16.00	15.00	NBR	SUD-1291
E07068L506	80.00	68.00	16.00	15.00	PU	PUD-881
E070686703	80.00	68.00	16.60	15.60	FKM	SUD-1141
E070706714	80.00	70.00	4.50	3.50	NBR	SUD-1705
E070706627	80.00	70.00	4.70	3.70	FKM	SUD-2128
E070701144	80.00	70.00	5.00	4.00	NBR	SUD-1723
E070701140	80.00	70.00	6.00	5.00	NBR	SUD-1341
E070701101	80.00	70.00	7.00	6.00	NBR	SUD-1506
E07070L501	**80.00**	**70.00**	**7.00**	**6.00**	**PU**	**PUD-110**
E07070L501	80.00	70.00	7.00	6.00	PU	PUD-697

Bold sizes are readily available in stock.
Other materials are available on request.

E07

Single Acting Symmetrical Seal

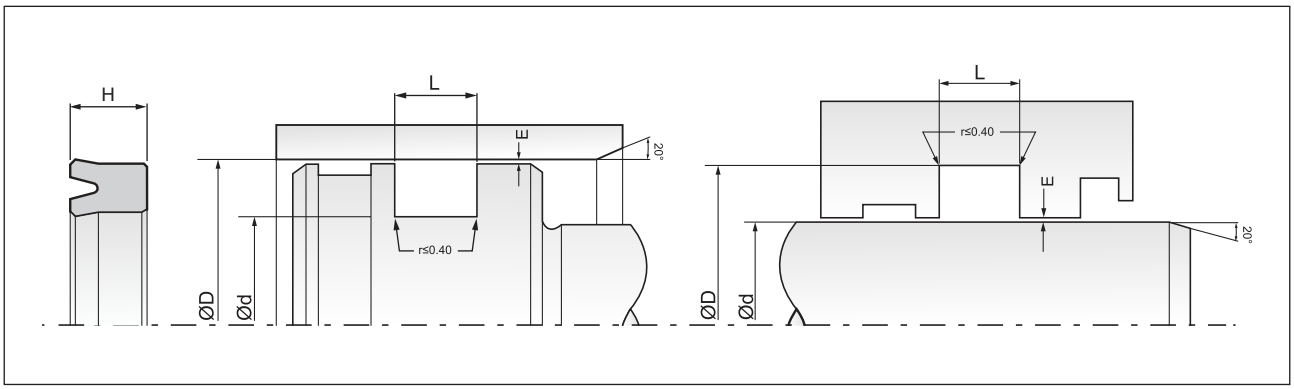

Part No.	D (H10)	d (f8/h9)	L (+0.2)	H	Material	Mould No.
E070706604	80.00	70.00	7.00	6.00	FKM	SUD-676
E070706623	80.00	70.00	7.00	6.00	FKM	SUD-1835
E070701146	80.00	70.00	7.00	6.00	NBR	SUD-1927
E070701147	80.00	70.00	7.00	6.00	NBR	SUD-1977
E070706718	80.00	70.00	7.00	6.00	FKM	SUD-2150
E070701141	80.00	70.00	7.20	6.20	NBR/PTFE	SUD-1502
E070706621	80.00	70.00	7.50	6.50	FKM	SUD-1308
E070701011	80.00	70.00	8.00	7.00	NBR	SUD-1384
E070701105	80.00	70.00	8.00	7.00	NBR	SUD-1649
E07070L542	**80.00**	**70.00**	**8.00**	**7.00**	**PU**	**PUD-1065**
E070701137	80.00	70.00	8.50	7.50	NBR	SUD-572
E07070L510	80.00	70.00	8.50	7.50	PU	PUD-384
E07070L507	**80.00**	**70.00**	**9.00**	**8.00**	**PU**	**PUD-163**
E070706709	80.00	70.00	9.00	8.00	FKM	SUD-980
E070702201	80.00	70.00	9.00	8.00	CR	SUD-1867
E070701010	80.00	70.00	9.00	8.00	NBR	SUD-880
E070701148	80.00	70.00	9.00	8.00	NBR	SUD-2089
E07070L542.	80.00	70.00	10.00	9.00	PU	PUD-912
E070706626	80.00	70.00	10.00	9.00	FKM	SUD-1994
E07070L525	80.00	70.00	11.00	10.00	PU	PUD-761
E07070L525	**80.00**	**70.00**	**11.00**	**10.00**	**PU**	**PUD-494**
E070701149	80.00	70.00	11.00	10.00	NBR	SUD-2090
E07070L540	80.00	70.00	12.00	11.00	PU	PUD-848
E070701103	80.00	70.00	13.00	12.00	NBR	SUD-1648
E07070L503	**80.00**	**70.00**	**13.00**	**12.00**	**PU**	**PUD-301**
E070706710	80.00	70.00	13.00	12.00	FKM/PTFE	SUD-964
E070708701	80.00	70.00	13.00	12.00	PU	PUD-818
E07071L502	**80.00**	**71.00**	**7.00**	**6.00**	**PU**	**PUD-358**
E070716601	80.00	71.00	7.00	6.00	FKM	SUD-694
E070711105	80.00	71.00	7.00	6.00	NBR	SUD-1951
E07071L501	80.00	71.00	7.50	6.50	PU	PUD-144
E070721101	80.00	72.00	11.00	10.00	NBR	SUD-689
E07072L504	80.00	72.00	13.00	12.00	PU	PUD-1039
E07073L504	80.00	73.00	6.00	5.00	PU	PUD-473
E07073L503	80.00	73.00	9.00	8.00	PU	PUD-461
E07075L516	80.00	75.00	11.00	10.00	PU	PUD-474
E070541004	80.50	54.50	17.00	16.00	NBR	SUD-2109
E07063L516	80.60	63.50	12.10	11.10	PU	PUD-454
E070676701	81.00	67.00	15.00	14.00	FKM	SUD-1803
E070716602	81.00	71.00	6.20	5.20	FKM	SUD-1788
E07060L519	82.00	60.00	11.50	10.50	PU	PUD-672
E0706640801	82.00	64.00	8.00	7.00	NBR	SUD-1099
E07067L503	82.00	67.00	10.00	9.00	PU	PUD-492
E07070L531	82.00	70.00	8.00	7.00	PU	PUD-668
E07070L515	82.00	70.00	8.00	7.00	PU	PUD-890
E070706617	82.00	70.00	8.50	7.50	FKM	SUD-816
E070706701	82.00	70.00	9.50	8.50	FKM	SUD-670
E070706619	82.00	70.00	9.70	8.70	FKM	SUD-1140
E070706628	82.00	70.00	15.00	14.00	FKM	SUD-1180
E07070L513	82.00	70.00	16.00	15.00	PU	PUD-209
E070726601	82.00	72.00	6.00	5.00	FKM	SUD-2108
E07072L503	82.00	72.00	9.00	8.00	PU	PUD-861

Part No.	D (H10)	d (f8/h9)	L (+0.2)	H	Material	Mould No.
E07069L502	82.50	69.85	10.50	9.50	PU	PUD-783
E070718907	82.50	71.30	7.00	6.00	PU	PUD-1059
E07050L538	82.55	50.80	13.70	12.70	PU	PUD-759
E070631120	82.55	63.50	13.70	12.70	NBR	SUD-1100
E07063L513	82.55	63.50	15.28	14.28	PU	PUD-397
E070691105	82.55	69.85	7.35	6.35	NBR	SUD-1771
E070691104	82.55	69.85	7.35	6.35	NBR	SUD-965
E070696602	82.55	69.85	10.50	9.50	FKM	SUD-1571
E070696601	82.55	69.85	10.60	9.60	FKM	SUD-1266
E070711103	82.55	71.40	6.55	5.55	NBR	SUD-855
E070716702	82.55	71.40	6.80	5.80	FKM	SUD-1889
E070716603	82.55	71.43	6.56	5.56	FKM	SUD-2003
E07073L403	82.55	73.02	9.50	8.50	PU	SUD-1259
E070631119	83.00	63.00	12.00	11.00	NBR	SUD-968
E070636604	83.00	63.00	13.00	12.00	FKM	SUD-1559
E07063L510	83.00	63.00	14.00	13.00	PU	PUD-532
E070631101	83.00	63.00	16.00	15.00	NBR	SUD-1197
E07070L535	83.00	70.00	11.00	10.00	PU	PUD-784
E070701133	83.00	70.00	14.00	13.00	NBR	SUD-848
E07070L544	83.00	70.00	14.00	13.00	PU	PUD-1073
E070736501	83.00	73.00	7.50	6.50	FKM	SUD-1516
E07075L514	83.00	75.00	6.00	5.00	PU	PUD-462
E070756704	83.00	75.00	9.00	8.00	FKM	SUD-1906
E07064L501	84.00	64.00	13.00	12.00	PU	PUD-385
E07074L501	84.00	74.00	8.00	7.00	PU	PUD-379
E070643401	84.70	64.70	13.00	12.00	EPDM	SUD-1399
E070454501	85.00	45.00	9.00	8.00	VMQ	SUD-1519
E070454502	85.00	45.00	11.00	10.00	VMQ	SUD-1518
E070601115	85.00	60.00	16.00	15.00	NBR	SUD-731
E07065L526	85.00	65.00	7.00	6.00	PU	PUD-693
E070651119	85.00	65.00	9.00	8.00	NBR	SUD-945
E070651126	85.00	65.00	11.00	10.00	NBR	SUD-1550
E07065L523	85.00	65.00	11.00	10.00	PU	PUD-694
E07065L518	85.00	65.00	12.00	11.00	PU	PUD-637
E07065L502	85.00	65.00	13.00	12.00	PU	PUD-768
E07065L502	**85.00**	**65.00**	**13.00**	**12.00**	**PU**	**PUD-127**
E07050903	85.00	65.00	13.00	12.00	NBR	SUD-1261
E070656701	85.00	65.00	13.00	12.00	FKM	SUD-944
E070651123	85.00	65.00	14.00	13.00	NBR	SUD-661
E07065L513	85.00	65.00	17.00	16.00	PU	PUD-392
E07070L530	85.00	70.00	6.00	5.00	PU	PUD-635
E07070L545	85.00	70.00	9.50	8.50	PU	PUD-1078
E070706707	85.00	70.00	10.00	9.00	FKM	SUD-950
E070701015	85.00	70.00	10.00	9.00	NBR	SUD-1738
E07070U501	85.00	70.00	10.00	9.00	EPDM	SUD-1860
E070701136	85.00	70.00	10.50	9.50	NBR	SUD-888
E07070L529	85.00	70.00	11.00	10.00	PU	PUD-636
E07070L538	85.00	70.00	11.50	10.50	PU	PUD-820
E07070L539	85.00	70.00	12.00	11.00	PU	PUD-822
E070706712	85.00	70.00	12.00	11.00	FKM	SUD-1201
E07070L523	85.00	70.00	12.50	11.50	PU	PUD-785
E070706601	85.00	70.00	12.50	11.50	FKM	SUD-1166

Bold sizes are readily available in stock.
Other materials are available on request.

E07

Single Acting Symmetrical Seal

MAX SPARE LIMITED
QUALITY. PRECISION. SPEED.

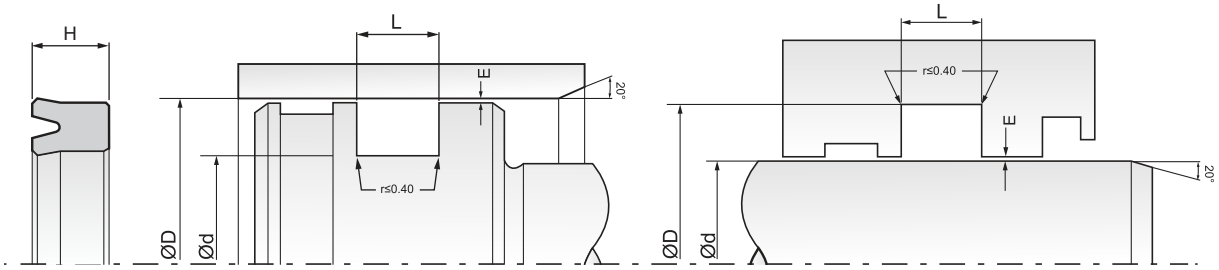

Part No.	D (H10)	d (f8/h9)	L (+0.2)	H	Material	Mould No.
E07070L508	**85.00**	**70.00**	**13.00**	**12.00**	**PU**	**PUD-375**
E07070L508	85.00	70.00	13.00	12.00	PU	PUD-853
E07070L536	85.00	70.00	13.50	12.50	PU	PUD-793
E07075S801	85.00	75.00	6.00	5.00	NBR	SUD-2087
E070756703	85.00	75.00	7.00	6.00	FKM	SUD-1352
E070751101	85.00	75.00	7.00	6.00	NBR	SUD-334
E070751101	85.00	75.00	7.00	6.00	NBR	SUD-1651
E07075L529	85.00	75.00	7.00	6.00	PU	PUD-1032
E070753402	85.00	75.00	8.00	7.00	EPDM	SUD-2028
E070751104	85.00	75.00	8.00	7.00	NBR	SUD-2091
E07075L527	85.00	75.00	8.50	7.50	PU	PUD-819
E070751102	85.00	75.00	9.00	8.00	NBR	SUD-1493
E07075L510	85.00	75.00	9.00	8.00	PU	PUD-772
E070756501	85.00	75.00	9.00	8.00	FKM	SUD-1237
E07075L510	**85.00**	**75.00**	**9.00**	**8.00**	**PU**	**PUD-241**
E07075L523	85.00	75.00	9.00	8.00	PU	PUD-716
E070751105	85.00	75.00	9.00	8.00	NBR	SUD-2099
E07075L524	85.00	75.00	11.00	10.00	PU	PUD-714
E070751106	85.00	75.00	11.00	10.00	NBR	SUD-2098
E07075L503	**85.00**	**75.00**	**13.00**	**12.00**	**PU**	**PUD-124**
E07075L530	85.00	75.00	15.00	14.00	PU	PUD-1053
E07069L505	85.72	69.85	10.52	9.52	PU	PUD-1007
E070738601	85.72	73.02	6.33	5.33	FKM/FABRIC	SUD-1080
E07073L402	85.72	73.02	9.50	8.50	PU	PUD-501
E07073L401	85.72	73.02	10.52	9.52	PU	PUD-394
E07073L401	85.72	73.02	10.52	9.52	PU	PUD-667
E070736701	85.72	73.02	10.52	9.52	FKM	SUD-843
E070736701	85.72	73.02	10.52	9.52	FKM	SUD-983
E070761107	85.72	76.20	10.52	9.52	NBR	SUD-1896
E070701135	86.00	70.00	13.00	12.00	NBR	SUD-877
E07076L507	86.00	76.00	13.00	12.00	PU	PUD-1085
E07078L501	86.00	78.00	8.00	7.00	PU	PUD-427
E070781101	86.00	78.00	9.00	8.00	NBR	SUD-1929
E07038L530	86.20	38.10	13.70	12.70	PU	PUD-1063
E070561007	87.00	56.50	14.00	13.00	NBR	SUD-1145
E07072L501	87.00	72.00	13.00	12.00	PU	PUD-436
E07075L512	87.00	75.00	10.00	9.00	PU	PUD-415
E070651121	88.00	65.00	13.00	12.00	NBR	SUD-1036
E070706615	88.00	70.00	7.00	6.00	FKM	SUD-707
E070781001	88.00	78.00	7.00	6.00	NBR	SUD-1915
E0708L505	88.00	78.00	11.00	10.00	PU	PUD-924
E070801120	88.00	80.00	7.50	6.50	NBR	SUD-946
E070696701	88.90	69.85	10.52	9.52	FKM	SUD-930
E070691103	88.90	69.85	13.00	12.00	NBR	SUD-920
E07069L503	88.90	69.85	15.28	14.28	PU	PUD-876
E07073L501	88.90	73.02	10.52	9.52	PU	PUD-410
E07073L502	88.90	73.03	13.60	12.60	PU	PUD-421
E07076L504	88.90	76.00	10.50	9.50	PU	PUD-638
E070761105	88.90	76.20	7.35	6.35	NBR	SUD-1051
E07076L503	88.90	76.20	7.35	6.35	PU	PUD-491
E070761106	88.90	76.20	7.50	6.50	NBR	SUD-1737
E070766702	88.90	76.20	10.52	9.52	FKM	SUD-883

Part No.	D (H10)	d (f8/h9)	L (+0.2)	H	Material	Mould No.
E070801131	89.00	80.00	7.00	6.00	NBR	SUD-1899
E07080L537	89.00	80.00	7.00	6.00	PU	PUD-1071
E07065L521	90.00	65.00	11.00	10.00	PU	PUD-680
E07065L508	**90.00**	**65.00**	**13.00**	**12.00**	**PU**	**PUD-354**
E07065L524	90.00	65.00	16.00	15.00	PU	PUD-691
E070701012	90.00	70.00	10.50	9.50	NBR	SUD-1703
E07070L506	**90.00**	**70.00**	**11.00**	**10.00**	**PU**	**PUD-357**
E070701107	90.00	70.00	11.00	10.00	FKM	SUD-616
E07070L506	90.00	70.00	11.00	10.00	PU	PUD-1023
E070706603	90.00	70.00	13.00	12.00	FKM	SUD-639
E070701113	90.00	70.00	13.00	12.00	NBR	SUD-939
E07070L502	**90.00**	**70.00**	**13.00**	**12.00**	**PU**	**PUD-234**
E070706705	90.00	70.00	13.50	12.50	FKM	SUD-918
E07070L528	90.00	70.00	15.00	14.00	PU	PUD-629
E070701139	90.00	70.00	16.00	15.00	NBR	SUD-1030
E070706717	90.00	70.00	16.00	15.00	FKM	SUD-2051
E07072L401	90.00	72.00	11.00	10.00	PU	PUD-893
E070746601	90.00	74.00	8.00	7.00	FKM	SUD-1645
E07075L520	90.00	75.00	7.00	6.00	PU	PUD-639
E07075L526	90.00	75.00	10.00	9.00	PU	PUD-787
E070756701	90.00	75.00	10.30	9.30	FKM	SUD-1139
E07075L517	90.00	75.00	11.00	10.00	PU	PUD-611
E07075L525	90.00	75.00	11.00	10.00	PU	PUD-734
E070751107	90.00	75.00	11.00	10.00	NBR	SUD-2097
E070756705	90.00	75.00	11.00	10.00	FKM	SUD-2120
E070751007	90.00	75.00	11.20	10.20	NBR	SUD-1595
E070753401	90.00	75.00	12.40	11.40	EPDM	SUD-1054
E07075L506	**90.00**	**75.00**	**13.00**	**12.00**	**PU**	**PUD-207**
E070751103	90.00	75.00	13.00	12.00	NBR	SUD-1650
E07075L528	90.00	75.00	13.00	12.00	PU	PUD-925
E070756702	90.00	75.00	13.50	12.50	FKM	SUD-1161
E07075L507	**90.00**	**75.00**	**16.00**	**15.00**	**PU**	**PUD-348**
E07075L507	90.00	75.00	16.00	15.00	PU	PUD-821
E070761001	90.00	76.00	17.00	16.00	NBR	SUD-1827
E07078L509	90.00	78.00	7.50	6.50	PU	PUD-1034
E07078L502	90.00	78.00	9.00	8.00	PU	PUD-432
E070786703	90.00	78.00	9.50	8.50	FKM	SUD-1893
E070786701	90.00	78.00	10.50	9.50	FKM	SUD-1185
E07078L508	90.00	78.00	13.00	12.00	PU	PUD-1015
E070786702	90.00	78.00	16.00	15.00	FKM	SUD-1210
E070801130	90.00	80.00	5.00	4.00	NBR	SUD-1808
E07080L527	90.00	80.00	6.50	5.50	PU	PUD-767
E07080L502	**90.00**	**80.00**	**7.00**	**6.00**	**PU**	**PUD-106**
E070806714	90.00	80.00	7.00	6.00	FKM	SUD-1706
E070801004	90.00	80.00	7.00	6.00	NBR	SUD-1270
E070801124	90.00	80.00	7.00	6.00	NBR	SUD-1130
E070806602	90.00	80.00	7.00	6.00	FKM	SUD-644
E07080L533	90.00	80.00	9.00	8.00	PU	PUD-875
E070801133	90.00	80.00	9.00	8.00	NBR	SUD-2096
E07080L524	90.00	80.00	10.00	9.00	PU	PUD-753
E070801126	90.00	80.00	10.20	9.20	NBR	SUD-1245
E070806703	90.00	80.00	11.00	10.00	FKM	SUD-938

Bold sizes are readily available in stock.
Other materials are available on request.

E07

Single Acting Symmetrical Seal

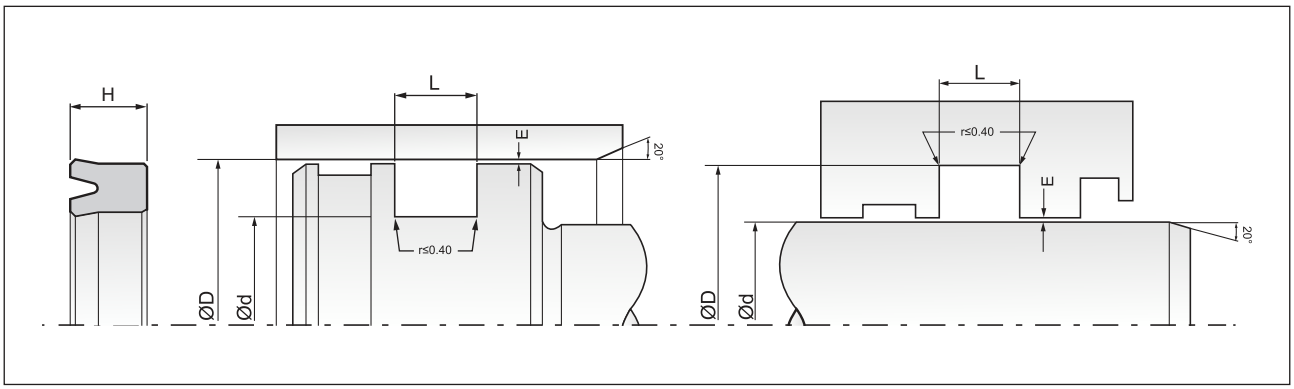

Part No.	D (H10)	d (f8/h9)	L (+0.2)	H	Material	Mould No.
E070801122	90.00	80.00	11.00	10.00	NBR	SUD-991
E07080L513	90.00	80.00	11.00	10.00	PU	PUD-376
E07080L535	90.00	80.00	11.00	10.00	PU	PUD-1017
E070801134	90.00	80.00	11.00	10.00	NBR	SUD-2095
E07080L506	**90.00**	**80.00**	**12.00**	**11.00**	**PU**	**PUD-109**
E07080L530	90.00	80.00	13.00	12.00	PU	PUD-832
E070801135	90.00	80.00	13.00	12.00	NBR	SUD-2094
E07080L508	**90.00**	**80.00**	**14.00**	**13.00**	**PU**	**PUD-335**
E07080L532	90.00	80.00	14.50	13.50	PU	PUD-863
E07071L503	**91.00**	**71.00**	**13.00**	**12.00**	**PU**	**PUD-496**
E070713401	91.00	71.00	13.00	12.00	EPDM	SUD-1400
E070751001	91.00	75.00	11.00	10.00	NBR	SUD-1840
E07068L505	92.00	68.00	16.00	15.00	PU	PUD-849
Z07078L506	92.00	78.00	11.00	10.00	PU	PUD-932
E07080L512	92.00	80.00	9.50	8.50	PU	PUD-368
E07080L531	92.00	80.00	9.70	8.70	PU	PUD-835
E07080L514	92.00	80.00	10.00	9.00	PU	PUD-391
E07080L529	92.00	80.00	10.30	9.30	PU	PUD-780
E070806607	92.00	80.00	15.00	14.00	FKM	SUD-1560
E070808901	92.00	80.00	15.00	14.00	PU	PUD-423
E07082L507	92.00	82.00	11.00	10.00	PU	PUD-847
E07086L501	92.00	86.00	7.00	6.00	PU	PUD-380
E07073L505	92.07	73.02	10.52	9.52	PU	PUD-531
E07076L505	92.07	76.20	10.52	9.52	PU	PUD-874
E07082L401	92.07	82.55	10.52	9.52	PU	PUD-603
E07082L402	92.07	82.55	13.50	12.50	PU	PUD-605
E07078L504	93.00	78.00	11.50	10.50	PU	PUD-661
E070801129	93.00	80.00	11.00	10.00	NBR	SUD-1548
E07080D601	93.00	80.00	11.00	10.00	HNBR	SUD-1863
E07080L538	93.00	80.00	11.00	10.00	PU	PUD-1072
E070756601.	93.80	75.00	10.60	9.60	FKM	SUD-1965
E070851117	94.00	85.00	7.00	6.00	NBR	SUD-845
E070871103	94.00	87.00	11.00	10.00	NBR	SUD-1297
E070871103	94.00	87.00	11.00	10.00	NBR	SUD-1173
E070601139	95.00	60.00	11.00	10.00	NBR	SUD-2081
E070701115	95.00	70.00	13.00	12.00	NBR	SUD-726
E070701134	95.00	70.00	16.00	15.00	NBR	SUD-862
E070721104	95.00	72.00	11.00	10.00	NBR	SUD-712
E07075L518	95.00	75.00	7.00	6.00	PU	PUD-640
E07075L519	95.00	75.00	10.00	9.00	PU	PUD-641
E07075L509	**95.00**	**75.00**	**13.00**	**12.00**	**PU**	**PUD-359**
E070756601	95.00	75.00	13.00	12.00	FKM	SUD-1748
E070751008	95.00	75.00	13.00	12.00	NBR	SUD-1998
E070751006	95.00	75.00	14.00	13.00	NBR	SUD-606
E07079L501	95.00	79.50	7.30	6.30	PU	PUD-1027
E070801118	95.00	80.00	6.50	5.50	NBR	SUD-895
E07080L522	95.00	80.00	7.00	6.00	PU	PUD-724
E07080L523	95.00	80.00	9.00	8.00	PU	PUD-725
E07080L528	95.00	80.00	10.00	9.00	PU	PUD-786
E070806610	95.00	80.00	10.00	9.00	FKM	SUD-2080
E07080L509	**95.00**	**80.00**	**11.00**	**10.00**	**PU**	**PUD-125**
E070806715	95.00	80.00	11.00	10.00	FKM	SUD-2015

Part No.	D (H10)	d (f8/h9)	L (+0.2)	H	Material	Mould No.
E070806609	95.00	80.00	12.00	11.00	FKM	SUD-1789
E070801110	95.00	80.00	12.40	11.40	NBR	SUD-657
E07080L511	**95.00**	**80.00**	**13.00**	**12.00**	**PU**	**PUD-360**
E07080L520	95.00	80.00	13.00	12.00	PU	PUD-513
E070856706	95.00	85.00	7.00	6.00	FKM	SUD-1181
E07085L516	95.00	85.00	7.00	6.00	PU	PUD-873
E07085L513	95.00	85.00	9.00	8.00	PU	PUD-789
E070856705	95.00	85.00	9.00	8.00	FKM	SUD-1148
E07085L520	95.00	85.00	9.50	8.50	PU	PUD-1016
E07085L507	95.00	85.00	10.50	9.50	PU	PUD-589
E07085L514	95.00	85.00	11.00	10.00	PU	PUD-790
E07085L508	95.00	85.00	13.00	12.00	PU	PUD-613
E07087L501	95.00	87.00	11.00	10.00	PU	PUD-754
E070871102	95.00	87.00	11.00	10.00	NBR	SUD-1350
E070871102	95.00	87.00	11.00	10.00	NBR	SUD-1121
E07076l506	95.25	76.20	11.92	10.92	PU	PUD-1020
E070766703	95.25	76.20	14.00	13.00	FKM	SUD-1673
E070596601	95.40	59.44	13.70	12.70	FKM	SUD-1444
E070881105	95.50	88.00	6.00	5.00	NBR	SUD-1340
E070761108	96.00	76.00	11.00	10.00	NBR	SUD-2101
E070881011	96.00	88.00	7.50	6.50	NBR	SUD-1046
E07084L401	96.85	84.15	9.50	8.50	PU	PUD-490
E070846701	96.85	84.15	9.50	8.50	FKM	SUD-1132
E07085L511	97.00	85.00	9.50	8.50	PU	PUD-774
E070770801	97.40	77.70	11.00	10.00	NBR	SUD-1040
E070822201	98.00	82.00	9.00	8.00	CR	SUD-1865
E070836501	98.00	83.00	9.00	8.00	FKM	SUD-1588
E07084L501	98.00	84.00	13.00	12.00	PU	PUD-909
E07086L502	98.00	86.00	13.00	12.00	PU	PUD-627
E07088L504	98.00	88.00	8.00	7.00	PU	PUD-383
E070901118	98.00	90.00	7.00	6.00	NBR	SUD-1163
E07090L522	98.00	90.00	8.00	7.00	PU	PUD-682
E070906710	98.00	90.00	9.00	8.00	FKM	SUD-1907
E07082L507	98.42	82.55	13.70	12.70	PU	PUD-921
E070858601	98.42	85.72	6.33	5.33	FKM/FABRIC	SUD-1083
E07085L401	98.42	85.72	10.52	9.52	PU	PUD-396
E070856703	98.42	85.72	10.52	9.52	FKM	SUD-986
E070856703	98.42	85.72	10.52	9.52	FKM	SUD-846
E070886703	98.43	88.90	5.76	4.76	FKM	SUD-1332
E070856710	99.00	85.00	9.00	8.00	FKM	SUD-1916
E070851004	99.00	85.00	10.00	9.00	NBR	SUD-1299
E070896701	99.00	89.00	7.00	6.00	FKM	SUD-1462
E070891102	99.00	89.00	8.00	7.00	NBR	SUD-1078
E07070L504	100.00	70.00	16.00	15.00	PU	PUD-128
E070701002	100.00	70.00	16.00	15.00	NBR	SUD-1253
E070701138	100.00	70.00	21.00	20.00	NBR	SUD-974
E070701016	100.00	70.00	21.00	20.00	NBR	SUD-2048
E070756601	100.00	75.00	13.00	12.00	FKM	SUD-1499
E070751005	100.00	75.00	13.00	12.00	NBR	SUD-1106
E070751004	100.00	75.00	13.50	12.50	NBR	SUD-1034
E07075L505	**100.00**	**75.00**	**16.00**	**15.00**	**PU**	**PUD-169**
E070796701	100.00	79.00	13.50	12.50	FKM	SUD-893

Bold sizes are readily available in stock.
Other materials are available on request.

E07

Single Acting Symmetrical Seal

MAX SPARE LIMITED
QUALITY. PRECISION. SPEED.

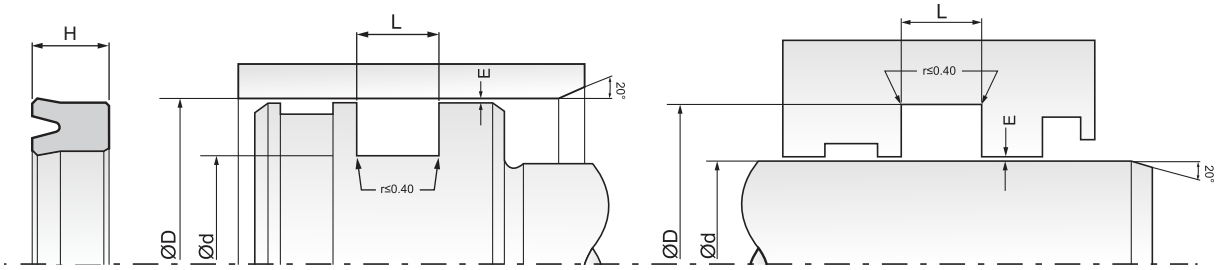

Part No.	D (H10)	d (f8/h9)	L (+0.2)	H	Material	Mould No.
E07080L517	100.00	80.00	5.00	4.00	PU	PUD-452
E070806708	100.00	80.00	6.10	5.10	FKM	SUD-1144
E070801003	100.00	80.00	10.00	9.00	NBR	SUD-1467
E07080L518	**100.00**	**80.00**	**11.00**	**10.00**	**PU**	**PUD-273**
E070806701	100.00	80.00	11.00	10.00	FKM	SUD-755
E070801101	100.00	80.00	11.00	10.00	NBR	SUD-1679
E070801101	100.00	80.00	11.00	10.00	NBR	SUD-1652
E070801132	100.00	80.00	11.00	10.00	NBR	SUD-1978
E070801105	100.00	80.00	12.00	11.00	NBR	SUD-339
E07080L507	**100.00**	**80.00**	**12.00**	**11.00**	**PU**	**PUD-111**
E07080L505	**100.00**	**80.00**	**13.00**	**12.00**	**PU**	**PUD-332**
E070800801	100.00	80.00	13.00	12.00	NBR	SUD-170
E070806604	100.00	80.00	13.00	12.00	FKM	SUD-776
E070801128	100.00	80.00	14.00	13.00	NBR	SUD-1480
E070806711	100.00	80.00	14.00	13.00	FKM	SUD-1438
E07080L503	**100.00**	**80.00**	**14.00**	**13.00**	**PU**	**PUD-112**
E070801119	100.00	80.00	15.00	14.00	NBR	SUD-896
E070806710	100.00	80.00	15.00	14.00	FKM	SUD-1819
E07080L521	100.00	80.00	15.50	14.50	PU	PUD-642
E070801106	100.00	80.00	16.00	15.00	NBR	SUD-701
E070806602	100.00	80.00	16.00	15.00	FKM	SUD-1070
E07080L536	**100.00**	**80.00**	**16.00**	**15.00**	**PU**	**PUD-1064**
E07080L516	100.00	80.00	17.00	16.00	PU	PUD-451
E07080L515	100.00	80.00	23.00	22.00	PU	PUD-435
E070816604	100.00	81.00	12.50	11.50	FKM	SUD-1122
E070811003	100.00	81.00	14.00	13.00	NBR	SUD-1846
E07082L508	100.00	82.00	7.00	6.00	PU	PUD-846
E070826702	100.00	82.00	8.90	7.90	FKM	SUD-1167
E070821107	100.00	82.00	9.50	8.50	NBR	SUD-2021
E070821104	100.00	82.00	10.00	9.00	NBR	SUD-961
E070821003	100.00	82.00	13.00	12.00	NBR	SUD-1123
E070826703	100.00	82.00	14.00	13.00	FKM	SUD-1711
E07083L503	100.00	83.00	13.50	12.50	PU	PUD-430
E07083L502	100.00	83.00	14.00	13.00	PU	PUD-366
E070841104	100.00	84.00	9.00	8.00	NBR	SUD-1843
E07084L502	100.00	84.50	7.30	6.30	PU	PUD-1026
E07085L512	100.00	85.00	6.00	5.00	PU	PUD-788
E070856611	100.00	85.00	6.00	5.00	FKM	SUD-104
E07085L510	100.00	85.00	7.00	6.00	PU	PUD-692
E07085L502	**100.00**	**85.00**	**10.00**	**9.00**	**PU**	**PUD-103**
E070856601	100.00	85.00	10.00	9.00	FKM	SUD-1102
E070851101	100.00	85.00	10.00	9.00	NBR	SUD-353
E070850801	100.00	85.00	10.00	9.00	NBR	SUD-1797
E070850802	100.00	85.00	10.00	9.00	NBR	SUD-1945
E070851123	100.00	85.00	10.00	9.00	NBR	SUD-1926
E070851122	100.00	85.00	11.00	10.00	NBR	SUD-1549
E070856609	100.00	85.00	11.00	10.00	FKM	SUD-1443
E07085L509	100.00	85.00	11.00	10.00	PU	PUD-643
E070851116	100.00	85.00	11.00	10.00	NBR	SUD-992
E070851126	100.00	85.00	11.00	10.00	NBR	SUD-2093
E070858701	100.00	85.00	12.50	11.50	PU	PUD-524
E070851125	100.00	85.00	12.50	11.50	NBR	SUD-2076

Part No.	D (H10)	d (f8/h9)	L (+0.2)	H	Material	Mould No.
E07085L503	**100.00**	**85.00**	**13.00**	**12.00**	**PU**	**PUD-206**
E070851118	100.00	85.00	13.00	12.00	NBR	SUD-1042
E070856704	100.00	85.00	13.00	12.00	FKM	SUD-803
E070858901	100.00	85.00	14.50	13.50	PU	PUD-690
E070851127	100.00	85.00	16.00	15.00	NBR	SUD-2118
E070861101	100.00	86.00	8.00	7.00	NBR	SUD-1826
E07087L503	100.00	87.00	13.00	12.00	PU	PUD-940
E070871101	100.00	87.80	10.00	9.00	NBR	SUD-706
E070881101	100.00	88.00	7.00	6.00	NBR	SUD-922
E070885908	100.00	88.00	8.50	7.50	PU	PUD-382
E07088L401	100.00	88.00	9.00	8.00	PU	PUD-683
E07088L511	100.00	88.00	9.50	8.50	PU	PUD-251
E070886704	100.00	88.00	9.50	8.50	FKM	SUD-1316
E070881104	100.00	88.00	10.00	9.00	NBR	SUD-360
E07088L506	**100.00**	**88.00**	**15.00**	**14.00**	**PU**	**PUD-572**
E070891101	100.00	89.00	7.00	6.00	NBR	SUD-1020
E07090Q203	100.00	90.00	5.50	4.50	PU	PUD-913
E070901101	100.00	90.00	6.00	5.00	NBR	SUD-1654
E07090U301	100.00	90.00	6.00	5.00	FKM	SUD-2125
E07090L512	**100.00**	**90.00**	**7.00**	**6.00**	**PU**	**PUD-361**
E070901003	100.00	90.00	7.70	6.70	NBR	SUD-1278
E070901125	100.00	90.00	7.70	6.70	NBR	SUD-1963
E070906704	100.00	90.00	7.80	6.80	FKM	SUD-1116
E070906708	100.00	90.00	8.00	7.00	FKM	SUD-1101
E070906610	100.00	90.00	8.50	7.50	FKM	SUD-1482
E07090L523	100.00	90.00	9.00	8.00	PU	PUD-744
E070901110	100.00	90.00	9.00	8.00	NBR	SUD-1410
E070900811	100.00	90.00	9.00	8.00	NBR	SUD-1472
E070901102	100.00	90.00	9.00	8.00	NBR	SUD-1653
E070901127	100.00	90.00	9.00	8.00	NBR	SUD-2092
E070906615	100.00	90.00	9.00	8.00	FKM	SUD-2136
E070906604	100.00	90.00	11.00	10.00	FKM	SUD-1484
E07090L515	**100.00**	**90.00**	**11.00**	**10.00**	**PU**	**PUD-105**
E070901121	100.00	90.00	11.00	10.00	NBR	SUD-290
E070901128	100.00	90.00	11.00	10.00	NBR	SUD-2102
E07090L503	**100.00**	**90.00**	**13.00**	**12.00**	**PU**	**PUD-367**
E070906605	100.00	90.00	13.00	12.00	FKM	SUD-708
E070901109	100.00	90.00	13.00	12.00	NBR	SUD-737
E07090L503	100.00	90.00	13.00	12.00	PU	PUD-902
E07090L518	100.00	90.00	14.00	13.00	PU	PUD-475
E070901116	100.00	90.00	16.00	15.00	NBR	SUD-957
E070916601	100.00	91.00	8.00	7.00	FKM	SUD-929
E070841103	101.00	84.00	8.00	7.00	NBR	SUE-1166
E070886601	101.00	88.00	9.50	8.50	FKM	SUE-1290
E070826704	101.50	82.00	14.00	13.00	FKM	SUE-1259
E070760701	101.60	76.20	10.00	9.00	NBR	SUE-1214
E07076L501	**101.60**	**76.20**	**13.70**	**12.70**	**PU**	**PUE-266**
E07082L502	101.60	82.55	10.52	9.52	PU	PUE-328
E07082L504	101.60	82.55	12.90	11.90	PU	PUE-409
E07082L510	101.60	82.55	13.70	12.70	PU	PUE-576
E070826601	101.60	82.55	14.00	13.00	FKM	SUE-1232
E070821105	101.60	82.55	15.29	14.29	NBR	SUE-762

Bold sizes are readily available in stock.
Other materials are available on request.

E07

Single Acting Symmetrical Seal

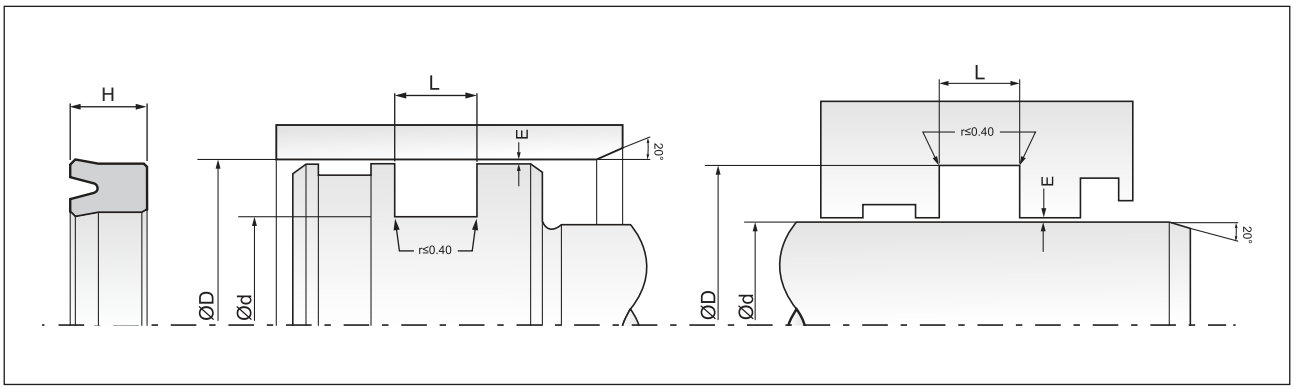

Part No.	D (H10)	d (f8/h9)	L (+0.2)	H	Material	Mould No.
E07082L511	101.60	82.55	16.88	15.88	PU	PUE-695
E070836601	101.60	83.00	9.50	8.50	FKM	SUE-1300
E070841102	101.60	84.00	9.20	8.20	NBR	SUE-975
E070851003	101.60	85.72	10.52	9.52	NBR	SUE-847
E070881010	101.60	88.60	8.00	7.00	NBR	SUE-617
E07088S401	101.60	88.90	7.35	6.35	HNBR	SUE-812
E070881102	101.60	88.90	7.35	6.35	NBR	SUE-797
E070881009	101.60	88.90	7.35	6.35	NBR	SUE-602
E070881003	101.60	88.90	7.35	6.35	NBR	SUE-1216
E070881106	101.60	88.90	7.35	6.35	NBR	SUE-1207
E070881103	101.60	88.90	7.50	6.50	NBR	SUE-772
E07088L510	101.60	88.90	8.93	7.93	PU	PUE-445
E070888701	101.60	88.90	10.50	9.50	PU	PUE-666
E07088L508	101.60	88.90	10.52	9.52	PU	PUE-399
E07088L501	**101.60**	**88.90**	**10.52**	**9.52**	**PU**	**PUE-164**
E070882301	101.60	88.90	10.52	9.52	CR	SUE-1146
E07092L503	101.60	92.07	7.35	6.35	PU	PUE-581
E070801001	102.00	80.00	9.00	8.00	NBR	SUE-848
E070826701	102.00	82.00	15.00	14.00	FKM	SUE-710
E07906704	102.00	90.00	9.50	8.50	FKM	SUE-683
E07090L519	102.00	90.00	10.00	9.00	PU	PUE-419
E07090L525	102.00	90.00	15.00	14.00	PU	PUE-556
E07092L502	102.00	92.00	11.00	10.00	PU	PUE-402
E070906501	102.67	90.00	7.35	6.35	FKM	SUE-786
E070906502	102.86	90.00	9.00	8.00	FKM	SUE-805
E070841001	104.00	84.00	11.00	10.00	NBR	SUE-1155
E070841101	104.00	84.00	14.00	13.00	NBR	SUE-724
E070890801	104.00	89.50	7.50	6.50	NBR	SUE-671
E070890801	104.00	89.50	7.50	6.50	NBR	SUE-643
E070921101	104.00	92.00	8.00	7.00	NBR	SUE-1172
E07088L507	104.77	88.90	10.52	9.52	PU	PUE-400
E070871104	104.80	87.00	13.00	12.00	NBR	SUE-1033
E07075L511	105.00	75.00	8.00	7.00	PU	PUE-287
E070756502	105.00	75.00	16.00	15.00	FKM	SUE-1188
E070806605	105.00	80.00	14.00	13.00	FKM	SUE-918
E07080L519	105.00	80.00	23.00	22.00	PU	PUE-340
E070852201	105.00	85.00	11.00	10.00	CR	SUE-1074
E070851006	105.00	85.00	11.00	10.00	NBR	SUE-1204
E07085L504	**105.00**	**85.00**	**11.00**	**10.00**	**PU**	**PUE-145**
E07085L501	**105.00**	**85.00**	**12.80**	**11.80**	**PU**	**PUE-120**
E07085L501	105.00	85.00	12.80	11.80	PU	PUE-549
E070856610	105.00	85.00	13.00	12.00	FKM	SUE-1221
E07085L509	105.00	85.00	13.00	12.00	PU	PUE-587
E070851119	105.00	85.00	16.00	15.00	NBR	SUE-722
E07089L502	105.00	89.50	13.00	12.00	PU	PUE-586
E07090L520	105.00	90.00	7.00	6.00	PU	PUE-420
E070906613	105.00	90.00	9.00	8.00	FKM	SUE-1267
E07090L514	**105.00**	**90.00**	**10.00**	**9.00**	**PU**	**PUE-211**
E070906707	105.00	90.00	10.00	9.00	FKM	SUE-849
E070906611	105.00	90.00	11.00	10.00	FKM	SUE-1058
E07090L504	**105.00**	**90.00**	**11.00**	**10.00**	**PU**	**PUE-123**
E070906701	105.00	90.00	12.27	11.27	FKM	SUE-764

Part No.	D (H10)	d (f8/h9)	L (+0.2)	H	Material	Mould No.
E07090Q202	105.00	90.00	12.50	11.50	PU	PUE-567
E07090L505	105.00	90.00	13.00	12.00	PU	PUE-498
E070901005	105.00	90.00	13.00	12.00	NBR	SUE-1158
E070906703	105.00	90.00	13.00	12.00	FKM	SUE-657
E07090L505	**105.00**	**90.00**	**13.00**	**12.00**	**PU**	**PUE-108**
E070901129	105.00	90.00	13.00	12.00	NBR	SUE-1409
E070916701	105.00	91.00	10.00	9.00	FKM	SUE-1378
E07092L501	105.00	92.00	11.00	10.00	PU	PUE-318
E07095L508	105.00	95.00	7.00	6.00	PU	PUE-298
E07095L511	105.00	95.00	11.00	10.00	PU	PUE-580
E07095L502	**105.00**	**95.00**	**13.00**	**12.00**	**PU**	**PUE-231**
E070968701	105.00	96.00	12.00	11.00	PU	PUE-630
E070661001	105.02	66.42	25.63	24.63	NBR	SUE-1092
E070861002	106.00	86.00	11.00	10.00	NBR	SUE-1156
E070871105	106.00	87.00	11.00	10.00	NBR	SUE-1225
E07090L506	**106.00**	**90.00**	**13.00**	**12.00**	**PU**	**PUE-262**
E07090L507	**106.00**	**90.00**	**15.00**	**14.00**	**PU**	**PUE-263**
E070861001	106.50	86.50	11.00	10.00	NBR	SUE-811
E07086L503	106.50	86.50	11.50	10.50	PU	PUE-472
E070884301	107.00	88.00	11.50	10.50	VMQ	SUE-1020
E070901123	107.00	90.00	9.00	8.00	NBR	SUE-1153
E070881008	107.95	88.90	10.52	9.52	NBR	SUE-593
E07098L503	107.95	98.42	7.85	6.85	PU	PUE-691
E07098S401	107.95	98.42	10.30	9.30	HNBR	SUE-759
E070891001	108.00	89.00	17.00	16.00	NBR	SUE-1157
E07093L501	**108.00**	**93.00**	**16.00**	**15.00**	**PU**	**PUE-264**
E070951003	108.00	95.00	6.00	5.00	NBR	SUE-1206
E071006705	108.00	100.00	5.00	4.00	FKM	SUE-666
E070901004	109.53	90.49	12.30	11.30	NBR	SUE-907
E070966701	109.55	96.85	9.50	8.50	FKM	SUE-806
E07096S401	109.55	96.85	9.50	8.50	HNBR	SUE-757
E07096L401	109.55	96.85	9.50	8.50	PU	PUE-338
E07096S402	109.55	96.85	14.25	13.25	HNBR	SUE-769
E07083L501	**110.00**	**83.00**	**14.00**	**13.00**	**PU**	**PUE-265**
E070851121	110.00	85.00	12.00	11.00	NBR	SUE-958
E07085L505	110.00	85.00	13.00	12.00	PU	PUE-288
E070851124	110.00	85.00	13.00	12.00	NBR	SUE-1327
E070851005	110.00	85.00	16.50	15.50	NBR	SUE-1136
E07090L521	110.00	90.00	11.00	10.00	PU	PUE-421
E070906614	110.00	90.00	11.00	10.00	FKM	SUE-1313
E070901002	110.00	90.00	12.40	11.40	NBR	SUE-887
E070901119	110.00	90.00	13.00	12.00	NBR	SUE-862
E07090L502	**110.00**	**90.00**	**13.00**	**12.00**	**PU**	**PUE-131**
E070901122	110.00	90.00	16.00	15.00	NBR	SUE-1036
E07090L513	110.00	90.00	16.00	15.00	PU	PUE-156
E070901124	110.00	90.00	16.00	15.00	NBR	SUE-1298
E070941001	110.00	94.00	8.50	7.50	NBR	SUE-631
E07095L503	**110.00**	**95.00**	**10.00**	**9.00**	**PU**	**PUE-109**
E070950701	110.00	95.00	10.00	9.00	NBR	SUE-795
E070956703	110.00	95.00	10.50	9.50	FKM	SUE-924
E070951112	110.00	95.00	11.50	10.50	NBR	SUE-1062
E07095L507	**110.00**	**95.00**	**13.00**	**12.00**	**PU**	**PUE-192**

Bold sizes are readily available in stock.
Other materials are available on request.

E07

Single Acting Symmetrical Seal

MAX SPARE LIMITED
QUALITY. PRECISION. SPEED.

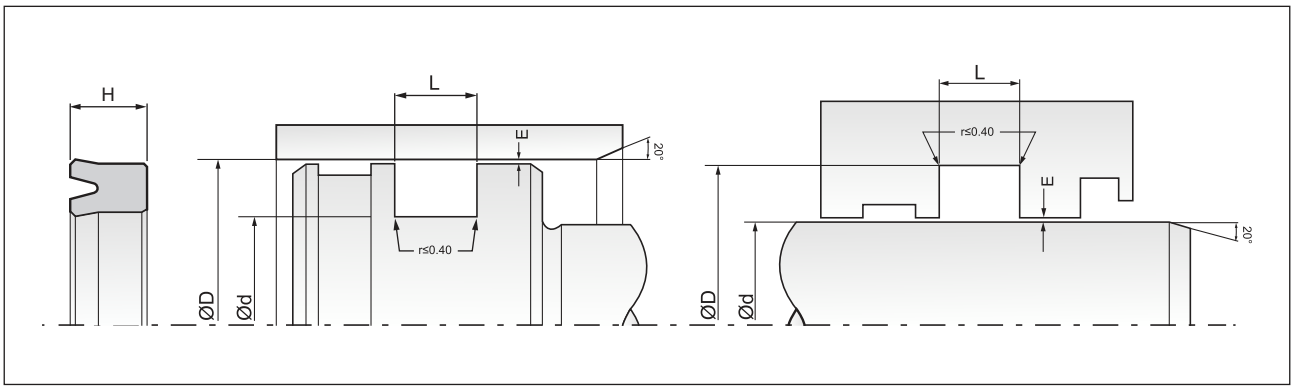

Part No.	D (H10)	d (f8/h9)	L (+0.2)	H	Material	Mould No.
E07095L506	**110.00**	**95.00**	**15.00**	**14.00**	**PU**	**PUE-270**
E07095L510	110.00	95.00	19.00	18.00	PU	PUE-339
E070981102	110.00	98.00	11.00	10.00	NBR	SUE-1209
E07098L501	110.00	98.00	17.00	16.00	PU	PUE-550
E070996701	110.00	99.00	16.00	15.00	FKM	SUE-941
E071006706	110.00	100.00	6.00	5.00	FKM	SUE-672
E07100L529	110.00	100.00	9.00	8.00	PU	PUE-678
E071006714	110.00	100.00	11.00	10.00	FKM	SUE-1249
E071006708	110.00	100.00	13.00	12.00	FKM	SUE-712
E07100L522	110.00	100.00	13.00	12.00	PU	PUE-532
E071031102	110.50	103.00	5.50	4.50	NBR	SUE-937
E070710801	110.71	71.60	25.89	24.89	NBR	SUE-1078
E070871104.	111.00	87.00	14.50	13.50	NBR	SUE-1310
E070988601	111.12	98.42	6.33	5.33	FKM/FABRIC	SUE-751
E070986701	111.12	98.42	10.52	9.52	FKM	SUE-691
E070986701	111.12	98.42	10.52	9.52	FKM	SUE-581
E07098L401	111.12	98.42	10.52	9.52	PU	PUE-297
E07098L402	111.12	98.42	15.30	14.30	PU	PUE-296
E070986702	111.12	98.42	15.30	14.30	FKM	SUE-692
E070986702	111.12	98.42	15.30	14.30	FKM	SUE-583
E07092L504	112.00	92.00	7.00	6.00	PU	PUE-664
E070920901	112.00	92.00	13.00	12.00	NBR	SUE-302
E07098L502	112.00	98.00	9.50	8.50	PU	PUE-677
E071001122	112.00	100.00	7.00	6.00	NBR	SUE-1208
E07100L527	112.00	100.00	10.00	9.00	PU	PUE-649
E071006715	112.00	100.00	13.00	12.00	FKM	SUE-1274
E070741001	113.00	74.00	15.00	14.00	NBR	SUE-1154
E07095Q201	113.00	95.50	10.50	9.50	PU	PUE-495
E071056705	113.00	105.00	9.00	8.00	FKM	SUE-1292
E07090L508	**114.00**	**90.00**	**14.00**	**13.00**	**PU**	**PUE-271**
E070976602	114.00	97.00	16.00	15.00	FKM	SUE-1390
E070976601	114.00	97.50	13.00	12.00	FKM	SUE-1380
E070981101	114.00	98.00	13.00	12.00	NBR	SUE-788
E07088L509	114.30	88.90	10.52	9.52	PU	PUE-401
E07088L505	114.30	88.90	17.00	16.00	PU	PUE-333
E071011003	114.30	101.60	7.35	6.35	NBR	SUE-1217
E071010L502	114.30	101.60	11.00	10.00	PU	PUE-423
E071016702	114.30	101.60	13.70	12.70	FKM	SUE-615
E07101L501	114.30	101.60	15.28	14.28	PU	PUE-321
E07101L503	114.30	101.60	15.50	14.50	PU	PUE-424
E07076Q201	115.00	76.00	33.00	32.00	PU	PUE-314
E070801103	115.00	80.00	16.00	15.00	NBR	SUE-838
E07088L502	**115.00**	**88.00**	**14.50**	**13.50**	**PU**	**PUE-272**
E07090L529	115.00	90.00	13.00	12.00	PU	PUE-640
E070906712	115.00	90.00	13.00	12.00	FKM	SUE-1373
E07090L509	**115.00**	**90.00**	**14.00**	**13.00**	**PU**	**PUE-273**
E07090L510	**115.00**	**90.00**	**16.00**	**15.00**	**PU**	**PUE-274**
E070906709	115.00	90.00	16.00	15.00	FKM	SUE-1094
E07090L510	115.00	90.00	16.00	15.00	PU	PUE-537
E07090L516	115.00	90.00	23.00	22.00	PU	PUE-331
E070956701	115.00	95.00	11.00	10.00	FKM	SUE-778
E07095L511	115.00	95.00	11.00	10.00	PU	PUE-422

Part No.	D (H10)	d (f8/h9)	L (+0.2)	H	Material	Mould No.
E070951101	115.00	95.00	11.00	10.00	NBR	SUE-1194
E07095L504	**115.00**	**95.00**	**13.00**	**12.00**	**PU**	**PUE-103**
E07095L505	**115.00**	**95.00**	**14.00**	**13.00**	**PU**	**PUE-275**
E070951111	115.00	95.00	14.00	13.00	NBR	SUE-789
E07100L514	115.00	100.00	7.00	6.00	PU	PUE-303
E07100L506	**115.00**	**100.00**	**10.00**	**9.00**	**PU**	**PUE-130**
E071001101	115.00	100.00	10.00	9.00	NBR	SUE-1164
E071006716	115.00	100.00	10.00	9.00	FKM	SUE-1329
E071006703	115.00	100.00	10.50	9.50	FKM	SUE-576
E071006605	115.00	100.00	11.00	10.00	FKM	SUE-1161
E07100L507	**115.00**	**100.00**	**11.00**	**10.00**	**PU**	**PUE-276**
E07100L509	**115.00**	**100.00**	**12.60**	**11.60**	**PU**	**PUE-277**
E071006710	115.00	100.00	12.80	11.80	FKM	SUE-755
E07100L525	115.00	100.00	12.80	11.80	PU	PUE-637
E071001012	115.00	100.00	13.00	12.00	NBR	SUE-123
E071001123	115.00	100.00	13.00	12.00	NBR	SUE-1408
E07100L520	115.00	100.00	16.00	15.00	PU	PUE-458
E071031103	115.00	103.00	11.00	10.00	NBR	SUE-1384
E07105L510	115.00	105.00	7.00	6.00	PU	PUE-469
E07105L516	115.00	105.00	10.00	9.00	PU	PUE-642
E07105L513	115.00	105.00	13.00	12.00	PU	PUE-554
E071061001	115.00	106.00	7.00	6.00	NBR	SUE-682
E07100L518	116.00	100.00	13.00	12.00	PU	PUE-356
E07107L504	116.00	107.00	7.50	6.50	PU	PUE-406
E07107L503	116.50	107.00	7.00	6.00	PU	PUE-316
E07100L516	117.00	100.00	7.40	6.40	PU	PUE-332
E07101L504	117.42	101.60	13.70	12.70	PU	PUE-676
E070901126	120.00	90.00	16.00	15.00	NBR	SUE-1374
E070961101	120.00	96.00	16.00	15.00	NBR	SUE-771
E07099L501	120.00	99.00	16.50	15.50	PU	PUE-417
E07100L519	120.00	100.00	9.00	8.00	PU	PUE-428
E07100L517	120.00	100.00	11.00	10.00	PU	PUE-248
E071006713	120.00	100.00	11.00	10.00	FKM	SUE-1241
E07100L523	120.00	100.00	11.50	10.50	PU	PUE-540
E07100L501	**120.00**	**100.00**	**12.00**	**11.00**	**PU**	**PUE-117**
E07100L504	**120.00**	**100.00**	**13.00**	**12.00**	**PU**	**PUE-139**
E071001010	120.00	100.00	13.00	12.00	NBR	SUE-607
E071001124	120.00	100.00	13.00	12.00	NBR	SUE-1410
E07100L528	120.00	100.00	15.60	14.60	PU	PUE-669
E071006707	120.00	100.00	16.00	15.00	FKM	SUE-859
E07100L510	**120.00**	**100.00**	**16.00**	**15.00**	**PU**	**PUE-237**
E07100L524	120.00	100.00	17.00	16.00	PU	PUE-557
E071046601	120.00	104.00	19.00	18.00	FKM	SUE-1312
E071051003	120.00	105.00	9.00	8.00	NBR	SUE-632
E071056603	120.00	105.00	9.00	8.00	FKM	SUE-1369
E071056601	120.00	105.00	10.00	9.00	FKM	SUE-587
E07105L506	120.00	105.00	11.00	10.00	PU	PUE-425
E071051004	120.00	105.00	12.00	11.00	NBR	SUE-978
E071051120	120.00	105.00	13.00	12.00	NBR	SUE-1412
E07106L501	120.00	106.00	17.00	16.00	PU	PUE-551
E07110L525	120.00	110.00	7.00	6.00	PU	PUE-644
E07110L530	120.00	110.00	9.00	8.00	PU	PUE-643

Bold sizes are readily available in stock.
Other materials are available on request.

E07

Single Acting Symmetrical Seal

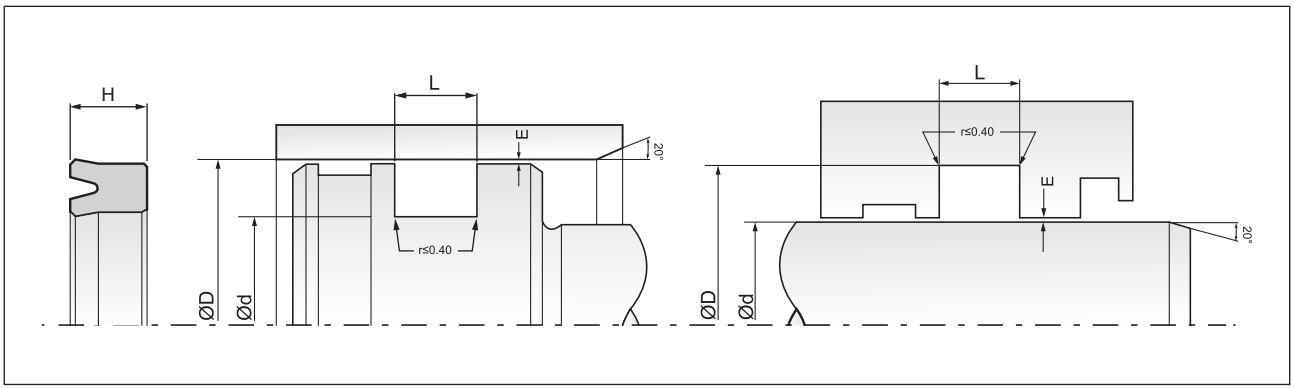

Part No.	D (H10)	d (f8/h9)	L (+0.2)	H	Material	Mould No.
E07110L522	120.00	110.00	11.00	10.00	PU	PUE-582
E07110L533	120.00	110.00	13.00	12.00	PU	PUE-667
E071131101	120.00	113.00	11.00	10.00	NBR	SUE-807
E071131101	120.00	113.00	11.00	10.00	NBR	SUE-908
E071071001	120.65	107.95	7.50	6.50	NBR	SUE-1121
E070986601	121.00	98.00	16.00	15.00	FKM	SUE-1242
E070106L502	121.00	106.00	10.00	9.00	PU	PUE-641
E07113L501	121.00	113.00	11.00	10.00	PU	PUE-492
E071131102	121.00	113.00	11.00	10.00	NBR	SUE-945
E071131102	121.00	113.00	11.00	10.00	NBR	SUE-905
E070906706	122.00	90.00	15.50	14.50	FKM	SUE-837
E07095L509	122.00	95.00	14.00	13.00	PU	PUE-304
E071056706	122.00	105.50	18.00	17.00	FKM	SUE-1366
E07110L531	122.00	110.00	10.00	9.00	PU	PUE-650
E07114L506	123.69	114.30	8.87	7.87	PU	PUE-685
E071040601	123.82	104.77	13.19	12.19	NBR	SUE-1419
E071071101	123.82	107.95	8.93	7.93	NBR	SUE-946
E071076601	123.82	107.95	12.50	11.50	FKM	SUE-685
E07107L401	123.82	107.95	12.50	11.50	PU	PUE-292
E07107D701	123.82	107.95	12.60	11.60	HNBR	SUE-579
E07111D703	123.82	111.12	9.10	8.10	HNBR	SUE-793
E07111L403	123.82	111.12	9.50	8.50	PU	PUE-346
E07112L504	124.00	112.00	10.00	9.00	PU	PUE-663
E07112L505	124.00	112.00	13.00	12.00	PU	PUE-773
E07115L505	124.00	115.00	16.00	15.00	PU	PUE-319
E07093L502	125.00	93.00	15.20	14.20	PU	PUE-552
E07095L514	125.00	95.00	16.00	15.00	PU	PUE-635
E070996601	125.00	99.50	14.00	13.00	FKM	SUE-590
E07100L512	125.00	100.00	12.50	11.50	PU	PUE-499
E07100L512	**125.00**	**100.00**	**12.50**	**11.50**	**PU**	**PUE-278**
E07100L503	**125.00**	**100.00**	**13.00**	**12.00**	**PU**	**PUE-116**
E071008312	125.00	100.00	13.00	12.00	NBR/FABRIC	SUE-886
E071006709	125.00	100.00	13.00	12.00	FKM	SUE-734
E07100L511	**125.00**	**100.00**	**14.00**	**13.00**	**PU**	**PUE-279**
E07100L502	125.00	100.00	16.00	15.00	PU	PUE-497
E07100L502	**125.00**	**100.00**	**16.00**	**15.00**	**PU**	**PUE-238**
E071006711	125.00	100.00	16.00	15.00	FKM	SUE-833
E071001104	125.00	100.00	16.00	15.00	NBR	SUE-232
E071008501	125.00	100.00	16.00	15.00	FKM/FABRIC	SUE-1299
E071001125	125.00	100.00	16.00	15.00	NBR	SUE-1411
E071006712	125.00	100.00	17.00	16.00	FKM	SUE-842
E07100L530	125.00	100.00	17.00	16.00	PU	PUE-696
E071006603	125.00	100.00	19.00	18.00	FKM	SUE-815
E071001011	125.00	100.00	19.50	18.50	NBR	SUE-868
E071006608	125.00	100.00	20.00	19.00	FKM	SUE-1392
E07100L515	125.00	100.00	22.00	21.00	PU	PUE-327
E0701056701	125.00	105.00	9.00	8.00	FKM	SUE-489
E07105L508	125.00	105.00	9.25	8.25	PU	PUE-438
E071051119	125.00	105.00	11.00	10.00	NBR	SUE-854
E07105L504	125.00	105.00	11.00	10.00	PU	PUE-200
E07105L501	**125.00**	**105.00**	**13.00**	**12.00**	**PU**	**PUE-119**
E071051101	125.00	105.00	13.00	12.00	NBR	SUE-944

Part No.	D (H10)	d (f8/h9)	L (+0.2)	H	Material	Mould No.
E07105L512	125.00	105.00	14.00	13.00	PU	PUE-529
E071056702	125.00	105.00	15.00	14.00	FKM	SUE-940
E071056703	125.00	105.00	15.50	14.50	FKM	SUE-1067
E071053401	125.00	105.00	16.00	15.00	EPDM	SUE-1096
E07105L502	**125.00**	**105.00**	**16.00**	**15.00**	**PU**	**PUE-113**
E071051121	125.00	105.00	16.00	15.00	NBR	SUE-1415
E07105L511	125.00	105.00	17.00	16.00	PU	PUE-512
E071056704	125.00	105.00	17.00	16.00	FKM	SUE-1152
E071081101	125.00	108.00	11.00	10.00	NBR	SUE-781
E071096701	125.00	109.00	7.00	6.00	FKM	SUE-844
E071106707	125.00	110.00	5.40	4.40	FKM	SUE-904
E07110L532	125.00	110.00	5.40	4.40	NBR	PUE-665
E071101115	125.00	110.00	8.50	7.50	NBR	SUE-571
E071106705	125.00	110.00	10.00	9.00	FKM	SUE-839
E07110L505	**125.00**	**110.00**	**10.00**	**9.00**	**PU**	**PUE-178**
E071104301	125.00	110.00	10.00	9.00	VMQ	SUE-1230
E071101009	125.00	110.00	10.50	9.50	NBR	SUE-1143
E071106704	125.00	110.00	11.00	10.00	FKM	SUE-840
E07110L511	125.00	110.00	11.00	10.00	PU	PUE-413
E07110L508	**125.00**	**110.00**	**11.00**	**10.00**	**PU**	**PUE-462**
E07110L503	**125.00**	**110.00**	**12.00**	**11.00**	**PU**	**PUE-307**
E071106709	125.00	110.00	13.00	12.00	FKM	SUE-1054
E07110L504	**125.00**	**110.00**	**13.00**	**12.00**	**PU**	**PUE-280**
E071101124	125.00	110.00	13.00	12.00	NBR	SUE-1414
E07110L501	**125.00**	**110.00**	**16.00**	**15.00**	**PU**	**PUE-234**
E071101101	125.00	110.00	16.00	15.00	NBR	SUE-482
E071101125	125.00	110.00	16.00	15.00	NBR	SUE-1413
E071101011	125.00	110.00	17.00	16.00	NBR	SUE-1284
E07110L510	125.00	110.00	19.00	18.00	PU	PUE-361
E071121106	125.00	112.00	8.00	7.00	NBR	SUE-718
E071121105	125.00	112.00	9.00	8.00	NBR	SUE-668
E071126701	125.00	112.00	9.40	8.40	FKM	SUE-950
E071126601	125.00	112.00	9.50	8.50	FKM	SUE-765
E071121101	125.00	112.00	9.50	8.50	NBR	SUE-574
E071126702	125.00	112.00	10.00	9.00	FKM	SUE-960
E071121104	125.00	112.00	10.00	9.00	NBR	SUE-725
E07112L502	**125.00**	**112.00**	**10.00**	**9.00**	**PU**	**PUE-281**
E07112L503	125.00	112.00	10.00	9.00	PU	PUE-564
E071126602	125.00	112.00	13.00	12.00	FKM	SUE-965
E071126603	125.00	112.00	14.00	13.00	FKM	SUE-966
E07113L502	125.00	113.00	15.00	14.00	PU	PUE-675
E071151108	125.00	115.00	7.00	6.00	NBR	SUE-782
E07115L512	125.00	115.00	9.00	8.00	PU	PUE-464
E07115L511	125.00	115.00	10.00	9.00	PU	PUE-457
E07115L513	125.00	115.00	13.00	12.00	PU	PUE-478
E071156702	125.00	115.00	13.00	12.00	FKM	SUE-1449
E071156701	125.00	115.00	16.00	15.00	NBR	SUE-1266
E07115L501	**125.00**	**115.00**	**16.00**	**15.00**	**PU**	**PUE-149**
E071006604	126.00	100.00	19.00	18.00	FKM	SUF-607
E071061102	126.00	106.00	16.00	15.00	NBR	SUF-493
E071146501	126.00	114.00	8.30	7.30	FKM	SUF-545
E07118L501	126.00	118.00	14.50	13.50	PU	PUF-245

Bold sizes are readily available in stock.
Other materials are available on request.

E07

Single Acting Symmetrical Seal

MAX SPARE LIMITED
QUALITY. PRECISION. SPEED.

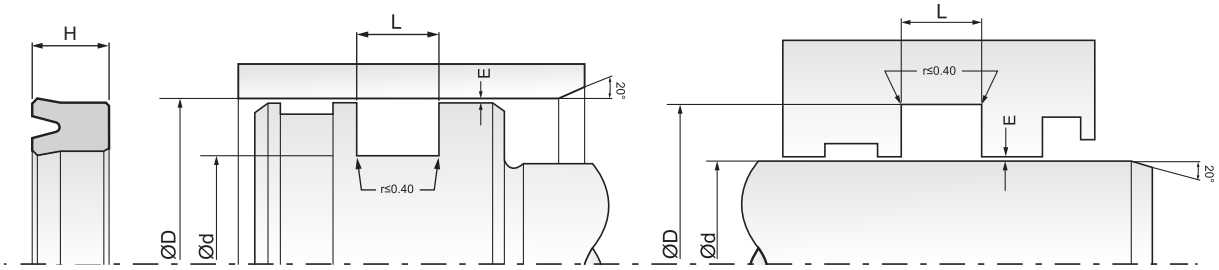

Part No.	D (H10)	d (f8/h9)	L (+0.2)	H	Material	Mould No.
E071146401	126.70	114.00	7.25	6.25	FKM	SUF-538
E07095L512	127.00	95.25	16.80	15.80	PU	PUF-337
E071016701	127.00	101.60	13.70	12.70	FKM	SUF-392
E071076703	127.00	107.00	18.00	17.00	FKM	SUF-826
E071071103	127.00	107.95	12.43	11.43	NBR	SUF-949
E071076702	127.00	107.95	12.50	11.50	FKM	SUF-577
E07107L505	127.00	107.95	16.88	15.88	PU	PUF-479
E071083501	127.00	108.00	10.40	9.40	EPDM	SUF-623
E07111D704	127.00	111.12	12.68	11.68	HNBR	SUF-1010
E07111L402	127.00	111.12	12.70	11.70	PU	PUF-274
E07111L401	127.00	111.12	17.50	16.50	PU	PUF-273
E07111S401	127.00	111.12	17.50	16.50	HNBR	SUF-593
E071146601	127.00	114.30	7.35	6.35	FKM	SUF-362
E07114S401	127.00	114.30	7.35	6.35	HNBR	SUF-573
E071141101	127.00	114.30	7.35	6.35	NBR	SUF-560
E071141001	127.00	114.30	7.35	6.35	NBR	SUF-847
E07114L503	127.00	114.30	7.70	6.70	PU	PUF-316
E07114L502	127.00	114.30	8.93	7.93	PU	PUF-260
E071146601.	127.00	114.30	9.00	8.00	FKM	SUF-908
E071141102	127.00	114.30	10.00	9.00	NBR	SUF-622
E07114L501	127.00	114.30	10.52	9.52	PU	PUF-197
E07114L504	127.00	114.30	15.28	14.28	PU	PUF-400
E071156601	127.00	115.00	10.50	9.50	FKM	SUF-648
E071036601	128.00	103.00	16.00	15.00	FKM	SUF-733
E071126604	128.00	112.00	13.00	12.00	FKM	SUF-668
E071126605	128.00	112.00	14.00	13.00	FKM	SUF-667
E071131001	128.00	113.00	8.00	7.00	NBR	SUF-587
E070821002	128.52	82.80	17.25	16.25	NBR	SUF-764
E07119S401	128.60	119.07	10.40	9.40	HNBR	SUF-558
E071026601	129.00	102.00	13.50	12.50	FKM	SUF-456
E071031101	129.38	103.58	16.87	15.87	NBR	SUF-630
E071194601	129.50	119.50	15.60	14.60	VMQ	SUF-579
E07100L513	**130.00**	**100.00**	**16.00**	**15.00**	**PU**	**PUF-166**
E07103L501	130.00	103.00	16.00	15.00	PU	PUF-381
E07105L514	130.00	105.00	13.00	12.00	PU	PUF-471
E07105L503	**130.00**	**105.00**	**16.00**	**15.00**	**PU**	**PUF-126**
E071051116	130.00	105.00	19.00	18.00	NBR	SUF-414
E07110L512	130.00	110.00	11.00	10.00	PU	PUF-333
E07110S401	130.00	110.00	11.00	10.00	HNBR	SUF-615
E071101107	130.00	110.00	11.00	10.00	NBR	SUF-398
E07110L509	**130.00**	**110.00**	**13.00**	**12.00**	**PU**	**PUF-171**
E07110L502	**130.00**	**110.00**	**16.00**	**15.00**	**PU**	**PUF-106**
E071101120	130.00	110.00	16.00	15.00	NBR	SUF-475
E071106603	130.00	110.00	16.00	15.00	FKM	SUF-965
E071101008	130.00	110.00	17.30	16.30	NBR	SUF-780
E071125904	130.00	112.00	18.00	17.00	PU	PUF-221
E07115L509	130.00	115.00	7.00	6.00	PU	PUF-332
E07115L506	**130.00**	**115.00**	**10.00**	**9.00**	**PU**	**PUF-268**
E071151110	130.00	115.00	13.00	12.00	NBR	SUF-993
E071151111	130.00	115.00	16.00	15.00	NBR	SUF-994
E07117Q201	130.00	117.00	14.00	13.00	PU	PUF-390
E07120L516	130.00	120.00	6.00	5.00	PU	PUF-394

Part No.	D (H10)	d (f8/h9)	L (+0.2)	H	Material	Mould No.
E071201104	130.00	120.00	6.50	5.50	NBR	SUF-869
E071206703	130.00	120.00	9.00	8.00	FKM	SUF-611
E07120L520	130.00	120.00	14.00	13.00	PU	PUF-477
E07117L501	130.17	117.47	13.70	12.70	PU	PUF-502
E071106708	135.00	110.00	16.00	15.00	FKM	SUF-643
E07115L508	135.00	115.00	11.00	10.00	PU	PUF-328
E07115L510	135.00	115.00	13.00	12.00	PU	PUF-334
E071151112	135.00	115.00	13.00	12.00	NBR	SUF-995
E07115L503	**135.00**	**115.00**	**16.00**	**15.00**	**PU**	**PUF-169**
E071151113	135.00	115.00	16.00	15.00	NBR	SUF-996
E071151109	135.00	115.00	17.30	16.30	NBR	SUF-586
E07120L522	135.00	120.00	11.00	10.00	PU	PUF-506
E07120L502	**135.00**	**120.00**	**16.00**	**15.00**	**PU**	**PUF-133**
E07125L509	135.00	125.00	10.50	9.50	PU	PUF-320
E07125L516	135.00	125.00	11.00	10.00	PU	PUF-503
E07126L501	135.00	126.00	7.00	6.00	PU	PUF-354
E07122D701	138.12	122.25	9.50	8.50	HNBR	SUF-602
E071236702	139.70	123.82	9.50	8.50	FKM	SUF-449
E07123L402	139.70	123.82	9.50	8.50	PU	PUF-232
E071236601	139.70	123.82	17.50	16.50	FKM	SUF-501
E07123L401	139.70	123.82	17.50	16.50	PU	PUF-231
E071236701	139.70	123.82	17.60	16.60	FKM	SUF-448
E07127D601	139.70	127.00	10.52	9.52	HNBR	SUF-591
E071276601	139.70	127.00	13.70	12.70	FKM	SUF-452
E071102302	140.00	110.00	15.00	14.00	CR	SUF-629
E071106602	140.00	110.00	16.00	15.00	FKM	SUF-624
E07110L521	140.00	110.00	16.00	15.00	PU	PUF-440
E071101121	140.00	110.00	18.00	17.00	NBR	SUF-655
E07110L507	140.00	110.00	20.00	19.00	PU	PUF-238
E071158401	140.00	115.00	15.00	14.00	NBR/FABRIC	SUF-944
E07115L502	**140.00**	**115.00**	**16.00**	**15.00**	**PU**	**PUF-200**
E071156602	140.00	115.00	19.70	18.70	FKM	SUF-680
E071156603	140.00	115.00	27.00	26.00	FKM	SUF-873
E07120L504	140.00	120.00	11.00	10.00	PU	PUF-366
E07120S401	140.00	120.00	11.00	10.00	HNBR	SUF-616
E071201102	140.00	120.00	11.00	10.00	NBR	SUF-834
E071206605	140.00	120.00	13.00	12.00	FKM	SUF-757
E071201105	140.00	120.00	13.00	12.00	NBR	SUF-876
E07120L514	**140.00**	**120.00**	**13.00**	**12.00**	**PU**	**PUF-174**
E07120L501	**140.00**	**120.00**	**15.50**	**14.50**	**PU**	**PUF-105**
E07120L503	140.00	120.00	16.00	15.00	PU	PUF-176
E071206702	140.00	120.00	16.00	15.00	FKM	SUF-563
E071208701	140.00	120.00	16.00	15.00	PU	PUF-442
E071201004	140.00	120.00	16.00	15.00	NBR	SUF-906
E07120L521	**140.00**	**120.00**	**17.00**	**16.00**	**PU**	**PUF-504**
E071206701	140.00	120.00	19.00	18.00	FKM	SUF-473
E07124L501	140.00	124.00	12.50	11.50	PU	PUF-391
E07125L511	140.00	125.00	7.00	6.00	PU	PUF-335
E071256604	140.00	125.00	9.00	8.00	FKM	SUF-895
E07125L501	**140.00**	**125.00**	**10.00**	**9.00**	**PU**	**PUF-115**
E071251102	140.00	125.00	10.00	9.00	NBR	SUF-384
E071251118	140.00	125.00	10.00	9.00	NBR	SUF-973

Bold sizes are readily available in stock.
Other materials are available on request.

E07

Single Acting Symmetrical Seal

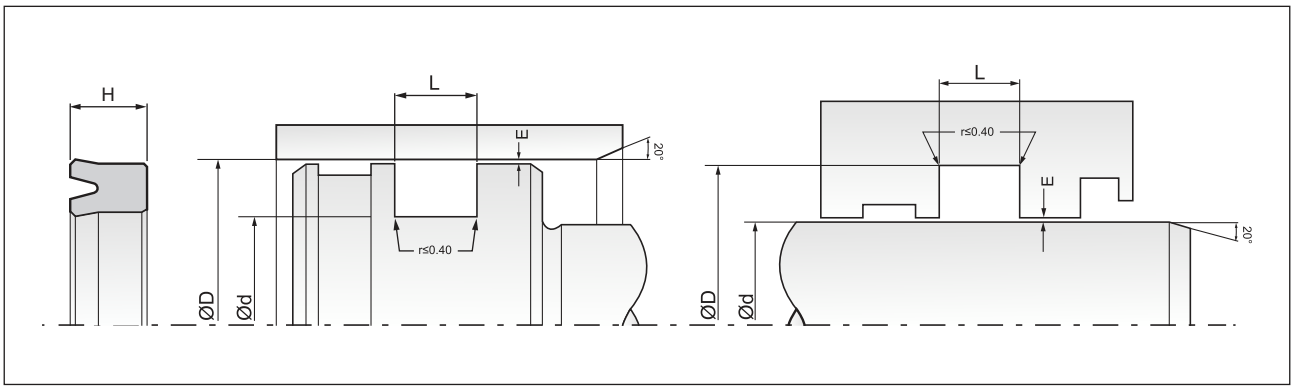

Part No.	D (H10)	d (f8/h9)	L (+0.2)	H	Material	Mould No.
E071256605	140.00	125.00	10.00	9.00	FKM	SUF-947
E07125L510	140.00	125.00	11.00	10.00	PU	PUF-326
E07125L512	140.00	125.00	13.00	12.00	PU	PUF-365
E071251116	140.00	125.00	13.00	12.00	NBR	SUF-479
E07125L506	**140.00**	**125.00**	**16.00**	**15.00**	**PU**	**PUF-269**
E071256601	140.00	125.00	16.00	15.00	FKM	SUF-788
E071278901	140.00	127.00	15.00	14.00	PU	PUF-244
E071281101	140.00	128.00	11.00	10.00	NBR	SUF-393
E071281102	140.00	128.00	13.00	12.00	NBR	SUF-394
E07128L501	140.00	128.00	15.00	14.00	PU	PUF-359
E07128L502	140.00	128.00	19.00	18.00	PU	PUF-281
E071301111	140.00	130.00	6.00	5.00	NBR	SUF-245
E07130L514	140.00	130.00	10.00	9.00	PU	PUF-370
E071206606	140.10	120.00	13.50	12.50	FKM	SUF-1001
E07130L505	140.60	130.00	14.00	13.00	PU	PUF-229
E071241101	141.00	124.80	13.60	12.60	NBR	SUF-899
E07125L508	141.00	125.00	10.00	9.00	PU	PUF-279
E071270802	142.00	127.00	9.20	8.20	NBR	SUF-661
E070951002	142.24	95.96	24.82	23.82	NBR	SUF-765
E07127L401	142.87	127.00	9.50	8.50	PU	PUF-276
E07127D701	142.87	127.00	9.50	8.50	HNBR	SUF-509
E07127S401	142.87	127.00	9.50	8.50	HNBR	SUF-674
E07127L402	142.87	127.00	17.50	16.50	PU	PUF-342
E07127D602	142.88	127.00	17.50	16.50	HNBR	SUF-677
E07116402	144.29	114.30	15.30	14.30	FKM	SUF-809
E07115L514	145.00	115.00	13.00	12.00	PU	PUF-408
E071153501	145.00	115.00	13.00	12.00	EPDM	SUF-786
E07125S401	145.00	125.00	11.00	10.00	HNBR	SUF-617
E07125L503	145.00	125.00	13.00	12.00	PU	PUF-129
E071251107	145.00	125.00	13.50	12.50	NBR	SUF-838
E071256602	145.00	125.00	16.00	15.00	FKM	SUF-830
E07125L507	**145.00**	**125.00**	**16.00**	**15.00**	**PU**	**PUF-270**
E071256701	145.00	125.00	17.00	16.00	FKM	SUF-373
E071306604	145.00	130.00	8.00	7.00	FKM	SUF-896
E07130L512	145.00	130.00	10.00	9.00	PU	PUF-163
E07130L520	145.00	130.00	11.00	10.00	PU	PUF-485
E07130L518	145.00	130.00	13.00	12.00	PU	PUF-478
E071301107	145.00	130.00	16.00	15.00	NBR	SUF-494
E07135L507	145.00	135.00	11.00	10.00	PU	PUF-336
E07135L505	145.00	135.00	13.00	12.00	PU	PUF-253
E07138L502	145.00	138.00	11.00	10.00	PU	PUF-401
E071381102	145.00	138.00	12.00	11.00	NBR	SUF-598
E07130L516	146.00	130.00	19.00	18.00	PU	PUF-427
E07127L502	146.05	127.00	16.88	15.88	PU	PUF-409
E071306401	146.05	130.17	8.93	7.93	FKM	SUF-801
E07135L507	147.00	135.00	10.00	9.00	PU	PUF-441
E07134S401	147.65	134.95	9.50	8.50	HNBR	SUF-559
E07134L401	147.65	134.95	9.50	8.50	PU	PUF-278
E07138L401	147.65	138.12	9.50	8.50	PU	PUF-319
E071191001	148.20	119.12	15.27	14.27	NBR	SUF-627
E071206604	150.00	120.00	13.00	12.00	FKM	SUF-712
E071206601	150.00	120.00	16.00	15.00	FKM	SUF-596

Part No.	D (H10)	d (f8/h9)	L (+0.2)	H	Material	Mould No.
E071201103	150.00	120.00	19.00	18.00	NBR	SUF-836
E07125L514	150.00	125.00	11.00	10.00	PU	PUF-393
E071251106	150.00	125.00	12.80	11.80	NBR	SUF-382
E071256704	150.00	125.00	13.00	12.00	FKM	SUF-875
E07125L502	**150.00**	**125.00**	**14.00**	**13.00**	**PU**	**PUF-222**
E071251117	150.00	125.00	19.00	18.00	NBR	SUF-892
E071251110	150.00	125.00	20.00	19.00	NBR	SUF-515
E071271102	150.00	127.00	14.50	13.50	NBR	SUF-759
E071281103	150.00	128.00	11.50	10.50	NBR	SUF-844
E071286602	150.00	128.00	13.00	12.00	FKM	SUF-751
E07130L515	**150.00**	**130.00**	**13.00**	**12.00**	**PU**	**PUF-421**
E071301113	150.00	130.00	13.00	12.00	NBR	SUF-948
E071306601	150.00	130.00	13.50	12.50	FKM	SUF-547
E071306701	150.00	130.00	15.00	14.00	FKM	SUF-779
E07130L502	**150.00**	**130.00**	**15.50**	**14.50**	**PU**	**PUF-107**
E07130L510	150.00	130.00	16.00	15.00	PU	PUF-280
E071301004	150.00	130.00	16.00	15.00	NBR	SUF-601
E071308901	150.00	130.00	16.00	15.00	PU	PUF-475
E07130L517	150.00	130.00	16.00	15.00	PU	PUF-476
E07130L519	150.00	130.00	18.00	17.00	PU	PUF-482
E071356701	150.00	135.00	8.00	7.00	FKM	SUF-476
E071351001	150.00	135.00	10.00	9.00	NBR	SUF-474
E07135L504	150.00	135.00	10.00	9.00	PU	PUF-220
E071356605	150.00	135.00	10.50	9.50	FKM	SUF-723
E07135L506	150.00	135.00	11.00	10.00	PU	PUF-284
E071351102	150.00	135.00	11.50	10.50	NBR	SUF-760
E07135L508	150.00	135.00	12.50	11.50	PU	PUF-481
E071350801	150.00	135.00	16.50	15.50	NBR	SUF-609
E07136L503	150.00	136.00	9.50	8.50	PU	PUF-369
E071361101	150.00	136.00	10.00	9.00	NBR	SUF-837
E07139L401	150.00	139.00	7.50	6.50	PU	PUF-415
E07140L514	150.00	140.00	7.00	6.00	PU	PUF-364
E07140L522	150.00	140.00	13.00	12.00	PU	PUF-489
E07140L511	150.00	140.00	16.00	15.00	PU	PUF-317
E07143L501	151.00	143.00	14.50	13.50	PU	PUG-191
E071200601	152.00	120.00	18.00	17.00	NBR/FABRIC	SUG-592
E071256603	152.00	125.00	14.00	13.00	FKM	SUG-726
E07127L501	152.00	127.00	16.00	15.00	PU	PUG-312
E071313401	152.00	131.00	13.00	12.00	EPDM	SUG-809
E071321102	152.00	132.00	11.00	10.00	NBR	SUG-506
E07132L501	152.00	132.00	16.00	15.00	PU	PUG-390
E07136L504	152.00	136.00	9.00	8.00	PU	PUG-396
E071386601	152.00	138.00	7.00	6.00	FKM	SUG-538
E071251119	152.40	125.60	13.20	12.20	NBR	SUG-886
E071271001	152.40	127.00	13.70	12.70	NBR	SUG-125
E07127L504	152.40	127.00	15.28	14.28	PU	PUG-337
E07127L503	152.40	127.00	20.50	19.50	PU	PUG-325
E07126701	152.40	127.00	20.50	19.50	FKM	SUG-747
E071286601	152.40	128.00	14.00	13.00	FKM	SUG-608
E071281001	152.40	128.00	17.00	16.00	NBR	SUG-417
E071306605	152.40	130.00	10.00	9.00	FKM	SUG-822
E071316601	152.40	131.00	13.00	12.00	FKM	SUG-737

Bold sizes are readily available in stock.
Other materials are available on request.

E07

Single Acting Symmetrical Seal

MAX SPARE LIMITED
QUALITY. PRECISION. SPEED.

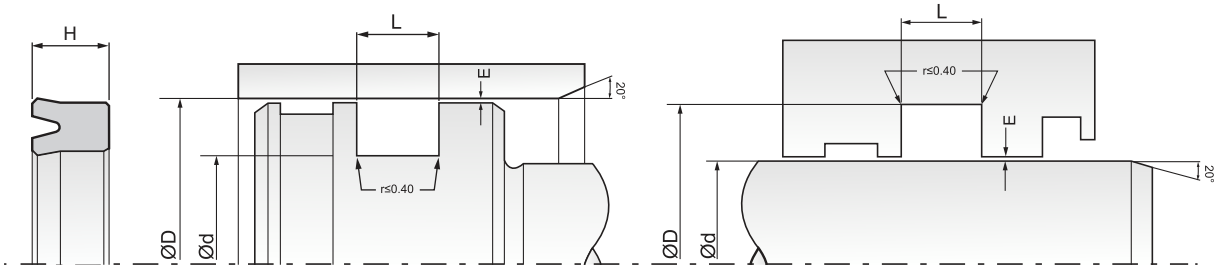

Part No.	D (H10)	d (f8/h9)	L (+0.2)	H	Material	Mould No.
E070351148	152.40	131.76	10.52	9.52	NBR	SUG-725
E071311102	152.40	131.76	19.25	18.25	NBR	SUG-465
E071331002	152.40	133.35	4.17	3.17	NBR	SUG-537
E071336601	152.40	133.35	11.52	10.52	FKM	SUG-777
E071336701	152.40	133.35	12.80	11.80	FKM	SUG-445
E071336701	152.40	133.35	12.80	11.80	FKM	SUG-397
E07133L401	152.40	133.35	12.80	11.80	PU	PUG-186
E071331101	152.40	133.35	13.70	12.70	NBR	SUG-509
E071361001	152.40	136.50	10.00	9.00	NBR	SUG-694
E071361002	152.40	136.52	10.52	9.52	NBR	SUG-699
E071361104	152.40	136.52	19.10	18.10	NBR	SUG-434
E071371101	152.40	137.60	8.20	7.20	NBR	SUG-673
E071396701	152.40	139.70	8.00	7.00	FKM	SUG-781
E071391101	152.40	139.70	10.52	9.52	NBR	SUG-341
E071416601	152.40	141.30	8.90	7.90	FKM	SUG-782
E071301003	152.50	130.50	13.70	12.70	NBR	SUG-395
E071351109	152.50	135.00	20.00	19.00	NBR	SUG-432
E071276602	153.00	127.00	14.00	13.00	FKM	SUG-545
E071303401	154.00	130.00	13.00	12.00	EPDM/FABRIC	SUG-810
E07140L521	154.00	140.00	11.00	10.00	PU	PUG-395
E071252201	155.00	125.00	16.00	15.00	CR	SUG-680
E07125L515	155.00	125.00	20.00	19.00	PU	PUG-389
E071306602	155.00	130.00	16.00	15.00	FKM	SUG-530
E071302201	155.00	130.00	17.00	16.00	CR	SUG-615
E071301112	155.00	130.00	19.00	18.00	NBR	SUG-469
E07135L503	**155.00**	**135.00**	**15.50**	**14.50**	**PU**	**PUG-115**
E071356602	155.00	135.00	16.00	15.00	FKM	SUG-364
E07138L501	155.00	138.00	11.00	10.00	PU	PUG-306
E07140L507	**155.00**	**140.00**	**10.00**	**9.00**	**PU**	**PUG-132**
E071406704	155.00	140.00	11.00	10.00	FKM	SUG-539
E07140L515	155.00	140.00	13.00	12.00	PU	PUG-334
E07140L520	155.00	140.00	16.00	15.00	PU	PUG-332
E07140L503	**155.00**	**140.00**	**16.00**	**15.00**	**PU**	**PUG-176**
E071432301	155.50	143.00	8.60	7.60	CR	SUG-714
E07136L401	155.57	136.52	12.70	11.70	PU	PUG-221
E07136L402	155.57	136.52	17.50	16.50	PU	PUG-250
E07136S401	155.57	136.52	17.50	16.50	HNBR	SUG-529
E071331001	157.50	133.00	17.10	16.10	NBR	SUG-299
E071463401	158.75	146.05	7.35	6.35	EPDM	SUG-472
E071308401	160.00	130.00	16.00	15.00	NBR/FABRIC	SUG-582
E07130L513	160.00	130.00	16.00	15.00	PU	PUG-280
E07130L503	**160.00**	**130.00**	**17.00**	**16.00**	**PU**	**PUG-285**
E07130L503	160.00	130.00	17.00	16.00	PU	PUG-177
E07130L507	160.00	130.00	19.00	18.00	PU	PUG-197
E071356604	160.00	135.00	13.00	12.00	FKM	SUG-391
E071356401	160.00	135.00	16.00	15.00	FKM	SUG-379
E07135L502	**160.00**	**135.00**	**16.00**	**15.00**	**PU**	**PUG-119**
E071356703	160.00	135.00	17.00	16.00	FKM	SUG-728
E071356606	160.00	135.00	20.00	19.00	FKM	SUG-871
E07140L512	160.00	140.00	9.25	8.25	PU	PUG-272
E071406601	160.00	140.00	11.00	10.00	FKM	SUG-476
E071406702	160.00	140.00	13.00	12.00	FKM	SUG-486

Part No.	D (H10)	d (f8/h9)	L (+0.2)	H	Material	Mould No.
E071401113	160.00	140.00	13.00	12.00	NBR	SUG-381
E07140L509	160.00	140.00	13.00	12.00	PU	PUG-205
E071406703	160.00	140.00	13.50	12.50	FKM	SUG-520
E071406701	160.00	140.00	15.00	14.00	FKM	SUG-482
E07140L502	**160.00**	**140.00**	**15.00**	**14.00**	**PU**	**PUG-107**
E07140L501	**160.00**	**140.00**	**15.50**	**14.50**	**PU**	**PUG-170**
E071406705	160.00	140.00	15.50	14.50	FKM	SUG-590
E071401115	160.00	140.00	16.00	15.00	NBR	SUG-489
E07140L513	**160.00**	**140.00**	**16.00**	**15.00**	**PU**	**PUG-139**
E071406707	160.00	140.00	17.00	16.00	FKM	SUG-612
E07140L523	**160.00**	**140.00**	**17.00**	**16.00**	**PU**	**PUG-408**
E071406604	160.00	140.00	18.00	17.00	FKM	SUG-876
E071456901	160.00	145.00	10.00	9.00	PTFE	SUG-554
E07145L503	**160.00**	**145.00**	**10.00**	**9.00**	**PU**	**PUG-133**
E071456702	160.00	145.00	10.00	9.00	FKM	SUG-813
E07145L506	160.00	145.00	11.00	10.00	PU	PUG-291
E071406705	160.00	145.00	11.00	10.00	FKM	SUG-588
E071451001	160.00	145.00	12.00	11.00	NBR	SUG-423
E071451101	160.00	145.00	12.00	11.00	NBR	SUG-595
E071456701	160.00	145.00	20.00	19.00	FKM	SUG-597
E07146L502	160.00	146.00	7.00	6.00	PU	PUG-309
E07146L501	160.00	146.00	11.00	10.00	PU	PUG-298
E071486601	160.00	148.00	13.00	12.00	FKM	SUG-587
E07148L501	160.00	148.00	16.00	15.00	PU	PUG-302
E071508901	160.00	150.00	9.50	8.50	PU	PUG-308
E07150L510	160.00	150.00	13.00	12.00	PU	PUG-398
E071472301	161.00	147.00	11.00	10.00	CR	SUG-764
E07146L401	161.92	146.05	17.50	16.50	PU	PUG-226
E07147S401	163.52	147.65	17.50	16.50	HNBR	SUG-495
E07130L504	**165.00**	**130.00**	**16.00**	**15.00**	**PU**	**PUG-178**
E07140L510	165.00	140.00	16.00	15.00	PU	PUG-206
E07145L507	165.00	145.00	13.00	12.00	PU	PUG-305
E07145L502	**165.00**	**145.00**	**17.00**	**16.00**	**PU**	**PUG-179**
E07145B101	165.00	145.00	17.00	16.00	NBR/FABRIC	SUG-811
E071501101	165.00	150.00	10.00	9.00	NBR	SUG-544
E07150L507	165.00	150.00	10.00	9.00	PU	PUG-207
E07155L512	165.00	155.00	7.00	6.00	PU	PUG-333
E07149L401	165.10	149.22	9.50	8.50	PU	PUG-227
E07150L511	166.00	150.00	19.00	18.00	PU	PUG-405
E071581002	168.00	158.00	11.00	10.00	NBR	SUG-727
E07149D701	168.27	149.22	17.30	16.30	HNBR	SUG-493
E071526701	168.27	152.40	9.50	8.50	FKM	SUG-447
E07152L401	168.27	152.40	9.50	8.50	PU	PUG-187
E071526701	168.27	152.40	9.50	8.50	FKM	SUG-401
E071351002	170.00	135.00	13.00	12.00	NBR	SUG-685
E071401114	170.00	140.00	19.00	18.00	NBR	SUG-451
E07140L506	170.00	140.00	20.00	19.00	PU	PUG-183
E071406602	170.00	140.00	20.00	19.00	FKM	SUG-669
E07150L502	**170.00**	**150.00**	**13.00**	**12.00**	**PU**	**PUG-174**
E071501001	170.00	150.00	16.00	15.00	NBR	SUG-628
E071506606	170.00	150.00	16.00	15.00	FKM	SUG-794
E071506605	170.00	150.00	17.00	16.00	FKM	SUG-647

Bold sizes are readily available in stock.
Other materials are available on request.

E07

Single Acting Symmetrical Seal

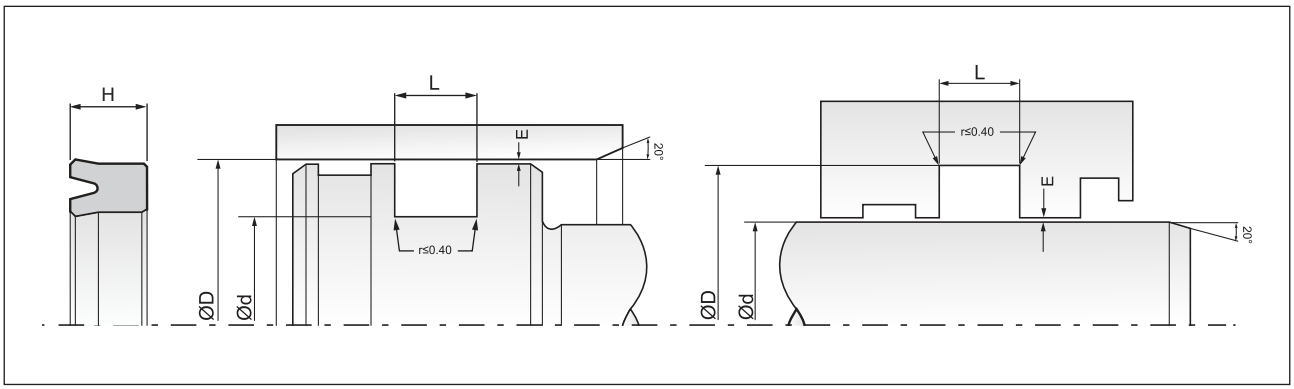

Part No.	D (H10)	d (f8/h9)	L (+0.2)	H	Material	Mould No.
E07150L503	**170.00**	**150.00**	**17.00**	**16.00**	**PU**	**PUG-175**
E07155L505	170.00	155.00	10.00	9.00	PU	PUG-212
E071551001	170.00	155.00	10.00	9.00	NBR	SUG-437
E071551107	170.00	155.00	11.00	10.00	NBR	SUG-414
E07155L506	**170.00**	**155.00**	**11.00**	**10.00**	**PU**	**PUG-218**
E071526702	171.45	152.40	17.60	16.60	FKM	SUG-449
E07152L402	171.45	152.40	17.60	16.60	PU	PUG-184
E071526702	171.45	152.40	17.60	16.60	FKM	SUG-402
E07155D701	171.45	155.57	9.50	8.50	HNBR	SUG-456
E07155L401	171.45	155.57	9.50	8.50	PU	PUG-223
E071011001	172.00	101.00	37.00	36.00	NBR	SUG-549
E071521102	172.00	152.00	11.00	10.00	NBR	SUG-698
E07155L402	174.62	155.57	17.60	16.60	PU	PUG-225
E07150L508	175.00	150.00	13.00	12.00	PU	PUG-323
E07150L509	175.00	150.00	16.00	15.00	PU	PUG-322
E071506604	175.00	150.00	21.00	20.00	FKM	SUG-626
E071551108	175.00	155.00	11.00	10.00	NBR	SUG-533
E071606703	175.00	160.00	10.00	9.00	FKM	SUG-621
E07160L506	175.00	160.00	10.00	9.00	PU	PUG-351
E071606603	176.00	160.00	19.00	18.00	FKM	SUH-416
E071581102	177.80	158.75	13.70	12.70	NBR	SUH-342
E07165L505	177.80	165.10	10.52	9.52	PU	PUH-301
E071141002	178.00	114.30	29.00	28.00	NBR	SUH-547
E07140L505	180.00	140.00	20.00	19.00	PU	PUH-163
E07150L506	**180.00**	**150.00**	**16.00**	**15.00**	**PU**	**PUH-138**
E071500902	180.00	150.00	16.00	15.00	NBR	SUH-491
E071500901	180.00	150.00	16.50	15.50	NBR	SUH-282
E07150L504	**180.00**	**150.00**	**17.00**	**16.00**	**PU**	**PUH-155**
E071506603	180.00	150.00	26.00	25.00	FKM	SUH-274
E07155L510	**180.00**	**155.00**	**16.00**	**15.00**	**PU**	**PUH-252**
E071551201	180.00	155.00	16.00	15.00	NBR	SUH-455
E07155L508	180.00	155.00	17.00	16.00	PU	PUH-211
E071556601	180.00	155.00	20.00	19.00	FKM	SUH-309
E071581101	180.00	158.00	17.00	16.00	NBR	SUH-313
E07160L507	180.00	160.00	13.00	12.00	PU	PUH-303
E07160V401	180.00	160.00	16.00	15.00	NBR	SUH-434
E071606601	180.00	160.00	16.00	15.00	FKM	SUH-191
E07160L501	**180.00**	**160.00**	**16.00**	**15.00**	**PU**	**PUH-101**
E071601107	180.00	160.00	17.30	16.30	NBR	SUH-350
E071641101	180.00	164.00	17.00	16.00	NBR	SUH-372
E07164L501	180.00	164.00	19.00	18.00	PU	PUH-266
E071656701	180.00	165.00	10.00	9.00	FKM	SUH-353
E071651105	180.00	165.00	11.00	10.00	NBR	SUH-281
E07170L506	180.00	170.00	13.00	12.00	PU	PUH-265
E071616701	180.97	161.92	12.80	11.80	FKM	SUH-288
E071588701	181.50	158.50	11.00	10.00	PU	PUH-308
E071656601	182.00	165.00	8.00	7.00	FKM	SUH-101
E071601002	184.00	160.00	17.00	16.00	NBR	SUH-538
E07160L503	**185.00**	**160.00**	**16.00**	**15.00**	**PU**	**PUH-174**
E071605913	185.00	160.00	19.00	18.00	PU	PUH-153
E071650701	185.00	165.00	15.00	14.00	NBR	SUH-337
E07170L505	185.00	170.00	10.00	9.00	PU	PUH-136

Part No.	D (H10)	d (f8/h9)	L (+0.2)	H	Material	Mould No.
E07170L503	185.00	170.00	13.00	12.00	PU	PUH-170
E07174L501	187.32	174.62	7.35	6.35	PU	PUH-166
E071501002	190.00	150.00	21.00	20.00	NBR	SUH-541
E071601101	190.00	160.00	16.00	15.00	NBR	SUH-221
E07160L504	190.00	160.00	20.00	19.00	PU	PUH-244
E071601108	190.00	160.00	23.00	22.00	NBR	SUH-444
E07165L503	**190.00**	**165.00**	**16.00**	**15.00**	**PU**	**PUH-227**
E07170L507	190.00	170.00	11.50	10.50	PU	PUH-341
E07170L504	**190.00**	**170.00**	**16.00**	**15.00**	**PU**	**PUH-184**
E071701109	190.00	170.00	17.00	16.00	NBR	SUH-446
E071451103	191.00	145.00	28.00	27.00	NBR	SUH-500
E07155L513	195.00	155.00	21.00	20.00	PU	PUH-315
E071651107	195.00	165.00	23.00	22.00	NBR	SUH-459
E071706601	195.00	170.00	14.00	13.00	FKM	SUH-454
E071701007	195.00	170.00	16.00	15.00	NBR	SUH-295
E071701107	195.00	170.00	21.00	20.00	NBR	SUH-349
E071751102	195.00	175.00	11.00	10.00	NBR	SUH-415
E071806702	196.85	180.97	9.50	8.50	FKM	SUH-286
E071786701	198.00	178.00	15.00	14.00	FKM	SUH-503
E07162L502	199.60	162.60	20.00	19.00	PU	PUH-172
E071606702	200.00	160.00	21.00	20.00	FKM	SUH-310
E07160L505	200.00	160.00	23.00	22.00	PU	PUH-263
E07165L502	200.00	165.00	21.00	20.00	PU	PUH-156
E071701008	200.00	170.00	16.00	15.00	NBR	SUH-399
E071700701	200.00	170.00	16.00	15.00	NBR	SUH-312
E07170L501	**200.00**	**170.00**	**16.00**	**15.00**	**PU**	**PUH-106**
E07170L502	**200.00**	**170.00**	**19.00**	**18.00**	**PU**	**PUH-118**
E071706602	200.00	170.00	21.00	20.00	FKM	SUH-465
E071746601	200.00	174.00	16.00	15.00	FKM	SUH-398
E071756702	200.00	175.00	13.50	12.50	FKM	SUH-512
E07175L501	**200.00**	**175.00**	**16.00**	**15.00**	**PU**	**PUH-129**
E071751103	200.00	175.00	16.00	15.00	NBR	SUH-509
E071756601	200.00	175.00	16.70	15.70	FKM	SUH-452
E07175L502	200.00	175.00	20.00	19.00	PU	PUH-205
E071806705	200.00	180.00	9.00	8.00	FKM	SUH-318
E07180L511	200.00	180.00	9.50	8.50	PU	PUH-251
E071801108	200.00	180.00	11.00	10.00	NBR	SUH-182
E07180L520	200.00	180.00	11.00	10.00	PU	PUH-321
E07180L505	200.00	180.00	11.00	10.00	PU	PUH-206
E071801110	200.00	180.00	12.00	11.00	NBR	SUH-294
E071801102	200.00	180.00	13.00	12.00	NBR	SUH-248
E07180L509	**200.00**	**180.00**	**13.00**	**12.00**	**PU**	**PUH-132**
E071801120	200.00	180.00	13.00	12.00	NBR	SUH-542
E07180L510	200.00	180.00	14.00	13.00	PU	PUH-228
E07180L503	**200.00**	**180.00**	**15.00**	**14.00**	**PU**	**PUH-105**
E071801111	200.00	180.00	15.00	14.00	NBR	SUH-322
E071806704	200.00	180.00	15.00	14.00	FKM	SUH-317
E071806710	200.00	180.00	15.50	14.50	FKM	SUH-361
E07180L502	**200.00**	**180.00**	**16.00**	**15.00**	**PU**	**PUH-232**
E07180L508	200.00	180.00	16.00	15.00	PU	PUH-207
E101806702	200.00	180.00	16.00	15.00	FKM	SUH-186
E071801119	200.00	180.00	16.00	15.00	NBR	SUH-539

Bold sizes are readily available in stock.
Other materials are available on request.

E07

Single Acting Symmetrical Seal

MAX SPARE LIMITED
QUALITY. PRECISION. SPEED.

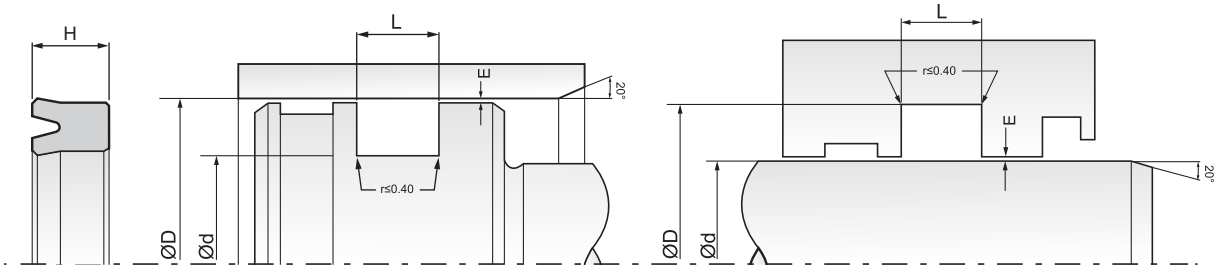

Part No.	D (H10)	d (f8/h9)	L (+0.2)	H	Material	Mould No.
E071801103	200.00	180.00	17.00	16.00	NBR	SUH-224
E071806709	200.00	180.00	17.00	16.00	FKM	SUH-433
E071811101	200.00	181.00	12.50	11.50	NBR	SUH-293
E071841101	200.00	184.00	9.00	8.00	NBR	SUH-420
E071848901	200.00	184.00	9.00	8.00	PU	PUH-277
E071851107	200.00	185.00	9.00	8.00	NBR	SUH-296
E07185L512	200.00	185.00	14.50	13.50	PU	PUH-312
E07185L509	200.00	185.00	21.00	20.00	PU	PUH-240
E071806701	200.02	180.97	17.60	16.60	FKM	SUJ-248
E071853401	201.00	185.00	9.00	8.00	EPDM	SUJ-271
E071853401	201.00	185.00	9.00	8.00	EPDM	SUJ-221
E071856601	201.00	185.00	11.00	10.00	FKM	SUJ-275
E071841001	202.40	184.16	13.00	12.00	NBR	SUJ-288
E071651106	203.00	165.00	19.00	18.00	NBR	SUJ-356
E071521101	203.20	152.40	25.00	24.00	NBR	SUJ-287
E071631001	203.20	163.51	20.05	19.05	NBR	SUJ-436
E07168L501	203.20	168.27	16.87	15.87	PU	PUJ-145
E07177L502	203.20	177.80	20.05	19.05	PU	PUJ-258
E07177L502	203.20	177.80	20.05	19.05	PU	PUJ-259
E071771101	203.20	177.80	23.70	22.70	NBR	SUJ-367
E07177L501	203.20	177.80	23.70	22.70	PU	PUJ-215
E07184S401	203.20	184.15	17.50	16.50	HNBR	SUJ-281
E071841102	203.20	184.15	23.22	22.22	NBR	SUJ-433
E071876701	203.20	187.19	8.87	7.87	FKM	SUJ-384
E071886701	203.20	188.51	11.00	10.00	FKM	SUJ-383
E071901106	203.20	190.50	16.87	15.87	NBR	SUJ-252
E071876701	204.00	187.70	10.00	9.00	FKM	SUJ-233
E07194L501	204.00	194.00	16.00	15.00	PU	PUJ-147
E071756701	205.00	175.00	19.00	18.00	FKM	SUJ-416
E07180L504	**205.00**	**180.00**	**16.00**	**15.00**	**PU**	**PUJ-150**
E071801116	205.00	180.00	16.00	15.00	NBR	SUJ-406
E07180L521	205.00	180.00	19.00	18.00	PU	PUJ-277
E071801104	205.00	180.00	20.00	19.00	NBR	SUJ-362
E071806711	205.00	180.00	21.00	20.00	FKM	SUJ-426
E071850801	205.00	185.00	13.00	12.00	NBR	SUJ-353
E07185L508	205.00	185.00	13.00	12.00	PU	PUJ-248
E07185L511	205.00	185.00	16.00	15.00	PU	PUJ-246
E07190L507	206.00	190.00	21.00	20.00	PU	PUJ-163
E07184L502	206.37	184.15	16.06	15.06	PU	PUJ-281
E071841002	206.38	184.15	13.70	12.70	NBR	SUJ-292
E07162L501	210.00	162.00	16.00	15.00	PU	PUJ-148
E071701108	210.00	170.00	23.00	22.00	NBR	SUJ-298
E071801005	210.00	180.00	16.00	15.00	NBR	SUJ-177
E07180L506	**210.00**	**180.00**	**16.00**	**15.00**	**PU**	**PUJ-149**
E07180115	210.00	180.00	16.00	15.00	NBR	SUJ-404
E071801109	210.00	180.00	23.00	22.00	NBR	SUJ-247
E07188L502	210.00	188.00	16.00	15.00	PU	PUJ-160
E071906701	210.00	190.00	13.00	12.00	FKM	SUJ-344
E07190L508	210.00	190.00	13.00	12.00	PU	PUJ-187
E07190L501	**210.00**	**190.00**	**15.50**	**14.50**	**PU**	**PUJ-200**
E071531001	212.00	153.70	37.00	36.00	NBR	SUJ-354
E071751101	215.00	175.00	21.00	20.00	NBR	SUJ-258

Part No.	D (H10)	d (f8/h9)	L (+0.2)	H	Material	Mould No.
E071806708	215.00	180.00	16.00	15.00	FKM	SUJ-329
E07185L506	215.00	185.00	21.00	20.00	PU	PUJ-155
E071901101	215.00	190.00	16.00	15.00	NBR	SUJ-394
E071971001	215.00	197.00	14.00	13.00	NBR	SUJ-374
E07200L501	216.00	200.00	19.00	18.00	PU	PUJ-219
E071791101	217.00	179.00	20.50	19.50	NBR	SUJ-443
E071715901	219.07	171.45	27.50	26.50	PU	PUJ-136
E071801009	220.00	180.00	21.00	20.00	NBR	SUJ-328
E07180L512	220.00	180.00	21.00	20.00	PU	PUJ-250
E071904501	220.00	190.00	16.00	15.00	VMQ	SUJ-296
E07195L501	220.00	195.00	17.00	16.00	PU	PUJ-195
E071951105	220.00	195.00	20.00	19.00	NBR	SUJ-408
E072006702	220.00	200.00	8.00	7.00	FKM	SUJ-272
E072001003	220.00	200.00	11.00	10.00	NBR	SUJ-388
E072001102	220.00	200.00	13.00	12.00	NBR	SUJ-215
E07200L503	**220.00**	**200.00**	**13.00**	**12.00**	**PU**	**PUJ-109**
E072006703	220.00	200.00	13.00	12.00	FKM	SUJ-305
E07200L509	220.00	200.00	14.00	13.00	PU	PUJ-196
E072001001	220.00	200.00	15.00	14.00	NBR	SUJ-171
E07200L501	**220.00**	**200.00**	**15.50**	**14.50**	**PU**	**PUJ-106**
E072006601	220.00	200.00	16.00	15.00	FKM	SUJ-154
E072046701	220.00	204.00	19.00	18.00	FKM	SUJ-291
E072021101	222.00	202.00	11.00	10.00	NBR	SUJ-273
E071956601	225.00	195.00	20.00	19.00	FKM	SUJ-338
E071956602	225.00	195.00	21.00	20.00	FKM	SUJ-347
E072003401	225.00	200.00	15.00	14.00	EPDM	SUJ-339
E07200L505	**225.00**	**200.00**	**16.00**	**15.00**	**PU**	**PUJ-156**
E07200L513	225.00	200.00	16.20	15.20	PU	PUJ-224
E072001101	225.00	200.00	20.00	19.00	NBR	SUJ-363
E072103501	225.00	210.00	11.00	10.00	EPDM	SUJ-342
E072146501	226.00	214.00	9.70	8.70	FKM	SUK-296
E07185L510	230.00	185.00	17.00	16.00	PU	PUK-176
E072004501	230.00	200.00	16.00	15.00	VMQ	SUK-246
E07200L511	230.00	200.00	16.00	15.00	PU	PUK-180
E07200L502	**230.00**	**200.00**	**18.00**	**17.00**	**PU**	**PUK-104**
E072001002	230.00	200.00	19.00	18.00	NBR	SUK-229
E07200L512	230.00	200.00	19.00	18.00	PU	PUK-179
E072051102	230.00	205.00	16.00	15.00	NBR	SUK-288
E072051001	230.00	205.00	20.00	19.00	NBR	SUK-175
E07210L503	**230.00**	**210.00**	**13.00**	**12.00**	**PU**	**PUK-115**
E072101106	230.00	210.00	16.00	15.00	NBR	SUK-310
E07214L501	230.00	214.00	20.00	19.00	PU	PUK-181
E07215L502	230.00	215.00	16.00	15.00	PU	PUK-127
E072051001	235.00	205.00	16.00	15.00	NBR	SUK-257
E07205L501	235.00	205.00	22.80	21.80	PU	PUK-138
E07210L506	235.00	210.00	19.00	18.00	PU	PUK-195
E072101002	235.00	210.00	20.00	19.00	NBR	SUK-298
E07220L503	235.00	220.00	13.00	12.00	PU	PUK-142
E072706701	239.50	270.20	22.50	21.50	FKM	SUK-305
E07210L501	**240.00**	**210.00**	**19.00**	**18.00**	**PU**	**PUK-103**
E072101001	240.00	210.00	19.00	18.00	NBR	SUK-248
E072151101	240.00	215.00	20.00	19.00	NBR	SUK-308

Bold sizes are readily available in stock.
Other materials are available on request.

E07

Single Acting Symmetrical Seal

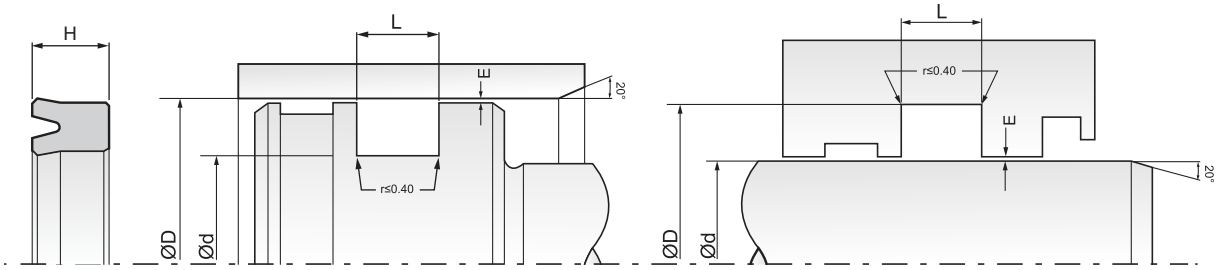

Part No.	D (H10)	d (f8/h9)	L (+0.2)	H	Material	Mould No.
E072200701	240.00	220.00	15.00	14.00	NBR	SUK-251
E072201101	244.00	220.00	15.00	14.00	NBR	SUK-254
E072051101	245.00	205.00	21.00	20.00	NBR	SUK-235
E072051105	245.00	205.00	21.00	20.00	NBR	SUK-309
E07225L508	245.00	225.00	19.00	18.00	PU	PUK-184
E072250601	249.00	225.00	20.00	19.00	NBR/FABRIC	SUK-231
E07200L514	250.00	200.00	19.00	18.00	PU	PUK-183
E072106701	250.00	210.00	15.20	14.20	FKM	SUK-274
E07210L505	250.00	210.00	21.00	20.00	PU	PUK-192
E072101107	250.00	210.00	21.00	20.00	NBR	SUK-329
E072206001	250.00	220.00	16.00	15.00	NBR	SUK-196
E072201002	250.00	220.00	19.00	18.00	NBR	SUK-252
E07220L501	**250.00**	**220.00**	**19.00**	**18.00**	**PU**	**PUK-102**
E07220L504	250.00	220.00	20.00	19.00	PU	PUK-168
E072206701	250.00	220.00	20.00	19.00	FKM	SUK-241
E072256602	250.00	225.00	16.00	15.00	FKM	SUK-277
E07225L502	250.00	225.00	17.00	16.00	PU	PUK-135
E072251101	250.00	225.00	17.00	16.00	NBR	SUK-315
E07225L503	250.00	225.00	19.00	18.00	PU	PUK-136
E072250401	250.00	225.00	19.00	18.00	NBR	SUK-189
E07225L501	**250.00**	**225.00**	**19.20**	**18.20**	**PU**	**PUK-128**
E072256601	250.00	225.00	19.60	18.60	FKM	SUK-270
E07225L504	250.00	225.00	20.00	19.00	PU	PUK-146
E07225L505	250.00	225.00	21.00	20.00	PU	PUK-156
E072261101	250.00	226.00	17.00	16.00	NBR	SUK-182
E072301106	250.00	230.00	11.00	10.00	NBR	SUK-203
E072306601	250.00	230.00	13.00	12.00	FKM	SUK-285
E07230L503	**250.00**	**230.00**	**13.00**	**12.00**	**PU**	**PUK-137**
E072301003	250.00	230.00	13.00	12.00	NBR	SUK-290
E072300801	250.00	230.00	13.00	12.00	NBR	SUK-317
E07230L506	250.00	230.00	13.50	12.50	PU	PUK-187
E072301001	250.00	230.00	15.00	14.00	NBR	SUK-138
E072305901	250.00	230.00	16.00	15.00	PU	PUK-107
E07230L501	**250.00**	**230.00**	**16.00**	**15.00**	**PU**	**PUK-196**
E07236701	250.00	230.00	16.00	15.00	FKM	SUK-324
E07230L502	**250.00**	**230.00**	**18.00**	**17.00**	**PU**	**PUK-129**
E07234L501	250.00	234.00	19.00	18.00	PU	PUK-167
E072151102	254.00	215.90	16.87	15.87	NBR	SUM-864
E072191101	254.00	219.07	19.25	18.25	NBR	SUM-804
E072221101	254.00	222.25	16.87	15.87	NBR	SUM-795
E07235L503	254.00	235.00	10.50	9.50	PU	PUM-383
E072366701	254.00	236.52	9.69	8.69	FKM	SUM-786
E072206601	255.00	220.00	13.00	12.00	FKM	SUM-824
E072351101	255.00	235.00	11.00	10.00	NBR	SUM-550
E07235L502	255.00	235.00	16.00	15.00	PU	PUM-246
E072386601	255.00	238.00	11.40	10.40	FKM	SUM-625
E072455901	255.00	245.00	16.00	15.00	PU	PUM-110
E07220L506	260.00	220.00	16.00	15.00	PU	PUM-344
E07230L507	260.00	230.00	19.00	18.00	PU	PUM-339
E0702301002	260.00	230.00	22.50	21.50	NBR	SUM-354
E07235L501	260.00	235.00	17.00	16.00	PU	PUM-177
E07240L503	260.00	240.00	13.00	12.00	PU	PUM-162

Part No.	D (H10)	d (f8/h9)	L (+0.2)	H	Material	Mould No.
E07240L507	260.00	240.00	18.00	17.00	PU	PUM-370
E07240L505	260.00	240.00	21.00	20.00	PU	PUM-188
E072051103	265.00	205.00	16.00	15.00	NBR	SUM-717
E07240L506	265.00	240.00	19.00	18.00	PU	PUM-273
E07250L509	266.00	250.00	19.00	18.00	PU	PUM-291
E07250L510	266.00	250.00	19.00	18.00	PU	PUM-355
E072476701	266.70	247.70	15.50	14.50	FKM	SUM-562
E07230L539	270.00	230.00	21.00	20.00	PU	PUM-340
E072401001	270.00	240.00	16.00	15.00	NBR	SUM-498
E07240L501	**270.00**	**240.00**	**18.50**	**17.50**	**PU**	**PUM-140**
E072401002	270.00	240.00	19.00	18.00	NBR	SUM-635
E07240L502	**270.00**	**240.00**	**19.00**	**18.00**	**PU**	**PUM-149**
E072501102	270.00	250.00	13.00	12.00	NBR	SUM-741
E070245-SUM-429275.00		**245.00**	**20.80**	**19.80**	**NBR**	**SUM-429**
E07250R301	275.00	250.00	13.00	12.00	PU	PUM-237
E07250L504	275.00	250.00	19.00	18.00	PU	PUM-242
E07250L506	275.00	250.00	20.00	19.00	PU	PUM-137
E071771001	276.00	177.80	29.00	28.00	NBR	SUM-861
E071931001	276.00	193.70	29.00	28.00	NBR	SUM-854
E072011001	276.00	201.42	29.00	28.00	NBR	SUM-855
E07250L505	280.00	250.00	16.00	15.00	PU	PUM-197
E07250L501	**280.00**	**250.00**	**19.00**	**18.00**	**PU**	**PUM-130**
E07250L502	**280.00**	**250.00**	**21.00**	**20.00**	**PU**	**PUM-146**
E072501101	280.00	250.00	23.00	22.00	NBR/FABRIC	SUM-634
E07250L511	280.00	250.00	23.50	22.50	PU	PUM-365
E072501001	280.00	250.00	26.00	25.00	NBR	SUM-367
E072606601	280.00	260.00	15.00	14.00	FKM	SUM-236
E072601102	280.00	260.00	15.00	14.00	NBR	SUM-416
E072601002	280.00	260.00	16.00	15.00	NBR	SUM-803
E07260L501	280.00	260.00	19.00	18.00	PU	PUM-182
E072655901	280.00	265.00	12.00	11.00	PU	PUM-279
E072551001	285.00	255.00	16.00	15.00	NBR	SUM-798
E07250L507	290.00	250.00	27.40	26.40	PU	PUM-278
E07260L502	290.00	260.00	20.00	19.00	PU	PUM-235
E072606602	290.00	260.00	21.00	20.00	FKM	SUM-674
E07265L503	290.00	265.00	21.00	20.00	PU	PUM-228
E072801104	294.00	280.00	11.50	10.50	NBR	SUM-393
E07265L502	295.00	265.00	20.00	19.00	PU	PUM-212
E072705901	295.00	270.00	17.00	16.00	PU	PUM-167
E072601103	300.00	260.00	21.00	20.00	NBR	SUM-781
E072701102	300.00	270.00	15.50	14.50	NBR	SUM-377
E072701001	300.00	270.00	17.00	16.00	NBR	SUM-595
E07270L501	**300.00**	**270.00**	**20.00**	**19.00**	**PU**	**PUM-111**
E072701104	300.00	270.00	23.00	22.00	NBR	SUM-394
E07270L503	300.00	270.00	25.00	24.00	PU	PUM-199
E072701107	300.00	270.00	26.00	25.00	NBR	SUM-520
E072746701	300.00	274.00	14.00	13.00	FKM	SUM-852
E072758701	300.00	275.00	17.00	16.00	PU	PUM-163
E072801001	300.00	280.00	15.00	14.00	NBR	SUM-209
E07280L503	300.00	280.00	15.00	14.00	PU	PUM-174
E072801104	300.00	280.00	16.00	15.00	NBR	SUM-654
E07280L511	300.00	280.00	16.00	15.00	PU	PUM-371

Bold sizes are readily available in stock.
Other materials are available on request.

E07

Single Acting Symmetrical Seal

MAX SPARE LIMITED
QUALITY. PRECISION. SPEED.

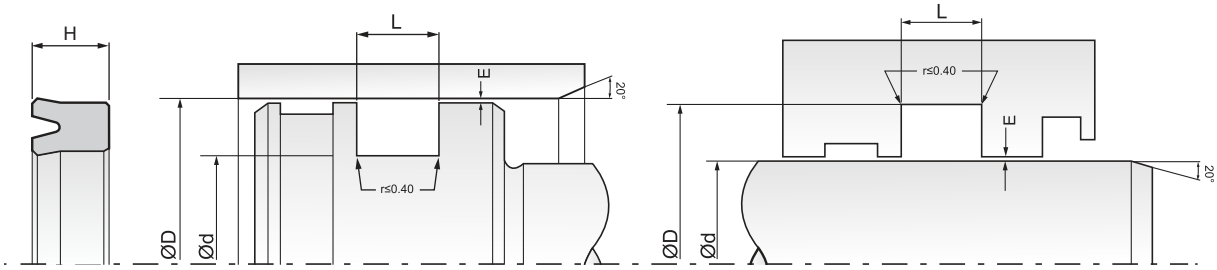

Part No.	D (H10)	d (f8/h9)	L (+0.2)	H	Material	Mould No.
E072801002	300.00	280.00	17.50	16.50	NBR	SUM-700
E072711101	301.00	271.00	16.00	15.00	NBR	SUM-651
E072661101	304.80	266.70	23.22	22.22	NBR	SUM-843
E072851101	304.80	285.75	10.52	9.52	NBR	SUM-702
E072751101	305.00	275.00	19.00	18.00	NBR	SUM-689
E07280L510	305.00	280.00	16.00	15.00	PU	PUM-367
E07280L502	305.00	280.00	17.00	16.00	PU	PUM-158
E07280L509	305.00	280.00	19.50	18.50	PU	PUM-366
E072856701	305.00	285.00	21.00	20.00	FKM	SUM-671
E072566601	310.00	256.00	28.00	27.00	FKM	SUM-753
E07270L505	310.00	270.00	23.00	22.00	PU	PUM-368
E070280L526	310.00	280.00	19.00	18.00	PU	PUM-294
E07280L505	310.00	280.00	20.00	19.00	PU	PUM-229
E07280L501	310.00	280.00	23.00	22.00	PU	PUM-157
E07280L508	315.00	280.00	21.00	20.00	PU	PUM-342
E07290L502	315.00	290.00	17.00	16.00	PU	PUM-159
E072951101	315.00	295.00	15.00	14.00	NBR	SUM-454
E072951001	315.00	295.00	28.00	27.00	NBR	SUM-853
E072501002	316.00	250.80	29.00	28.00	NBR	SUM-857
E07290L501	**320.00**	**290.00**	**21.00**	**20.00**	**PU**	**PUM-151**
E072901201	320.00	290.00	21.00	20.00	NBR	SUM-115
E072906701	320.00	290.00	21.00	20.00	FKM	SUM-728
E07296L501	320.00	296.00	25.00	24.00	PU	PUM-297
E072906601	322.00	290.40	22.50	21.50	FKM	SUM-819
E073001005	324.00	300.00	15.00	14.00	NBR	SUM-770
E072581001	325.00	258.44	29.00	28.00	NBR	SUM-862
E072731001	325.00	273.00	29.00	28.00	NBR	SUM-856
E07274L501	325.00	274.00	27.50	26.50	PU	PUM-132
E07310L503	325.00	310.00	10.00	9.00	PU	PUM-381
E072901102	330.00	290.00	21.00	20.00	NBR	SUM-412
E073001107	330.00	300.00	17.00	16.00	NBR	SUM-845
E073006602	330.00	300.00	17.50	16.50	FKM	SUM-545
E07300L502	330.00	300.00	19.00	18.00	PU	PUM-200
E073001002	330.00	300.00	19.00	18.00	NBR	SUM-686
E073005901	330.00	300.00	21.00	20.00	PU	PUM-243
E073001001	330.00	300.00	21.00	20.00	NBR	SUM-512
E073001102	330.00	300.00	23.00	22.00	NBR	SUM-476
E07300L501	330.00	300.00	23.00	22.00	PU	PUM-161
E073001106	330.00	300.00	23.00	22.00	NBR	SUM-839
E07310L502	330.00	310.00	13.00	12.00	PU	PUM-196
E073101001	330.00	310.00	16.00	15.00	NBR	SUM-851
E07310L501	330.00	310.00	18.00	17.00	PU	PUM-175
E073001103	332.00	300.00	24.50	23.50	NBR	SUM-703
E073001003	332.00	300.00	25.00	24.00	NBR	SUM-738
E072996701	336.00	299.00	22.00	21.00	FKM	SUM-774
E073206601	336.00	320.00	9.00	8.00	FKM	SUM-445
E073196701	337.00	319.00	9.00	8.00	FKM	SUM-776
E07300L504	340.00	300.00	19.00	18.00	PU	PUM-263
E073151102	340.00	315.00	13.50	12.50	NBR	SUM-543
E073151101	340.00	315.00	16.00	15.00	NBR	SUM-466
E07315L501	340.00	315.00	16.00	15.00	PU	PUM-193
E073052301	345.00	305.00	26.00	25.00	CR	SUM-747

Part No.	D (H10)	d (f8/h9)	L (+0.2)	H	Material	Mould No.
E073001101	350.00	300.00	31.00	30.00	NBR	SUM-684
E073201102	350.00	320.00	20.00	19.00	NBR	SUM-672
E07320L505	350.00	320.00	22.00	21.00	PU	PUM-230
E07320L504	350.00	320.00	23.00	22.00	PU	PUM-220
E073351101	355.00	335.00	15.00	14.00	NBR	SUM-455
E073231101	355.60	323.85	27.40	26.40	NBR	SUM-519
E073306701	355.60	330.20	20.05	19.05	FKM	SUM-511
E073331101	356.00	333.00	13.50	12.50	NBR	SUM-410
E07320L503	360.00	320.00	22.00	21.00	PU	PUM-214
E07320L502	360.00	320.00	29.00	28.00	PU	PUM-160
E073301101	360.00	330.00	21.00	20.00	NBR	SUM-381
E0733066101	360.00	330.00	21.00	20.00	FKM	SUM-790
E07330L501	360.00	330.00	22.00	21.00	PU	PUM-156
E070330L502	360.00	330.00	23.00	22.00	PU	PUM-341
E073301001	360.00	330.00	26.00	25.00	NBR	SUM-576
E07340L501	360.00	340.00	16.00	15.00	PU	PUM-173
E073405901	370.00	340.00	16.00	15.00	PU	PUM-172
E073401001	370.00	340.00	17.00	16.00	NBR	SUM-572
E073501001	370.00	350.00	15.00	14.00	NBR	SUM-326
E073505901	370.00	350.00	15.00	14.00	PU	PUM-168
E07350L505	370.00	350.00	19.00	18.00	PU	PUM-343
E073401101	380.00	340.00	21.00	20.00	NBR	SUM-400
E07350L502	380.00	350.00	21.00	20.00	PU	PUM-201
E073596601	380.00	359.00	16.00	15.00	FKM	SUM-692
E07360L502	380.00	360.00	12.00	11.00	PU	PUM-234
E073551201	387.00	355.00	24.50	23.50	NBR	SUM-816
E073501002	390.00	350.00	21.00	20.00	NBR	SUM-135
E073501107	390.00	350.00	36.00	35.00	NBR	SUM-487
E073606601	390.00	360.00	16.00	15.00	FKM	SUM-541
E07360L501	390.00	360.00	23.00	22.00	PU	PUM-169
E07360L505	390.00	360.00	23.50	22.50	PU	PUM-349
E073701002	390.00	370.00	16.00	15.00	NBR	SUM-850
E073701001	395.00	370.00	17.00	16.00	NBR	SUM-327
E073601002	400.00	360.00	21.00	20.00	NBR	SUM-402
E073601102	400.00	360.00	26.00	25.00	NBR	SUM-460
E073636601	400.00	363.70	21.00	20.00	FKM	SUM-647
E073701101	400.00	370.00	16.00	15.00	NBR	SUM-771
E07370L503	400.00	370.00	20.00	19.00	PU	PUM-372
E07370L502	400.00	370.00	21.00	20.00	PU	PUM-180
E07370L501	400.00	370.00	23.00	22.00	PU	PUM-166
E073701102	400.00	370.00	49.00	48.00	NBR	SUM-818
E073801102	400.00	380.00	16.00	15.00	NBR	SUM-463
E073808701	410.00	380.00	23.00	22.00	PU	PUM-164
E073906601	415.00	390.00	15.50	14.50	FKM	SUVG-661
E07400C301	418.70	400.00	10.00	9.00	XNBR	SUVG-691
E073550901	420.00	355.60	29.00	28.00	NBR	SUVG-711
E073801001	420.00	380.00	21.00	20.00	NBR	SUVG-537
E074021101	420.00	402.00	13.00	12.00	NBR	SUVG-680
E073950801	424.18	395.24	23.22	22.22	NBR	SUVG-690
E074011101	427.60	401.60	20.00	19.00	NBR	SUVG-610
E074001102	430.00	400.00	26.00	25.00	NBR	SUVG-609
E074101001	435.00	410.00	19.20	18.20	NBR	SUVG-668

Bold sizes are readily available in stock.
Other materials are available on request.

E07

Single Acting Symmetrical Seal

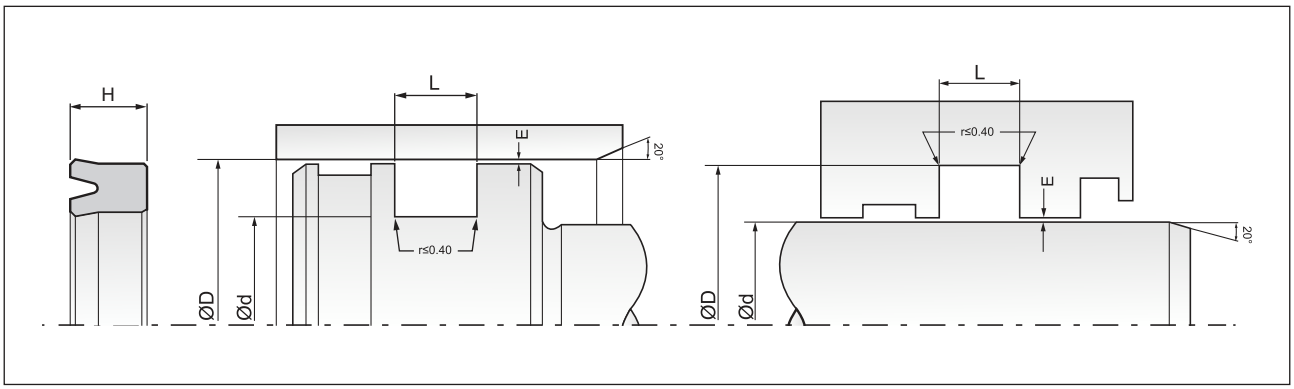

Part No.	D (H10)	d (f8/h9)	L (+0.2)	H	Material	Mould No.
E074131001	438.00	413.00	17.00	16.00	NBR	SUVG-282
E074081001	448.00	408.00	20.00	19.00	NBR	SUVG-414
E074001101	450.00	400.00	21.00	20.00	NBR	SUVG-588
E074008301	450.00	400.00	21.00	20.00	NBR/FABRIC	SUVG-399
E074106601	450.00	410.00	21.00	20.00	FKM	SUVG-495
E074151101	455.00	415.00	21.00	20.00	NBR	SUVG-373
E07425L501	455.00	425.00	21.00	20.00	PU	PUM-211
E074251103	457.00	425.00	25.00	24.00	NBR	SUVG-484
E074171101	457.20	417.19	21.00	20.00	NBR	SUVG-424
E07438L501	457.20	438.15	20.05	19.05	PU	PUM-171
E07438S401	468.12	438.15	15.27	14.27	HNBR	SUVG-561
E07440L501	480.00	440.00	22.00	21.00	PU	PUM-353
E074501102	484.00	450.00	21.00	20.00	NBR	SUVG-419
E07460C301	487.00	460.00	21.00	20.00	XNBR	SUVG-601
E074570801	487.93	457.20	23.22	22.22	NBR	SUVG-689
E07450L501	490.00	450.00	31.00	30.00	PU	PUM-249
E074651101	500.00	465.00	17.00	16.00	NBR	SUVG-356
E074751001	500.00	475.00	13.50	12.50	NBR	SUVG-660
E074958301	526.00	495.00	23.00	22.00	NBR/FABRIC	SUVG-464
E074886701	527.05	488.95	24.81	23.81	FKM	SUVG-567
E075001101	532.00	500.00	25.00	24.00	NBR	SUVG-538
E075001102	532.00	500.00	25.00	24.00	NBR	SUVG-640
E075010801	532.63	501.65	23.22	22.22	NBR	SUVG-688
E075261001	552.40	526.40	20.00	19.00	NBR	SUVG-709
E075251101	555.00	525.00	16.00	15.00	NBR	SUVG-623
E075433401	555.80	543.00	9.00	8.00	EPDM	SUVG-418
E075081101	558.80	508.00	26.40	25.40	NBR	SUVG-527
E075651001	585.00	565.00	11.00	10.00	NBR	SUVG-672
E075501101	600.00	550.00	26.00	25.00	NBR	SUVG-362
E075701101	600.00	570.00	18.00	17.00	NBR	SUVG-695

Part No.	D (H10)	d (f8/h9)	L (+0.2)	H	Material	Mould No.
E075701001	600.00	570.00	26.00	25.00	NBR	SLO-307
E07570E301	600.00	570.00	26.00	25.00	NBR	SUVG-599
E075841101	609.60	584.20	20.05	19.05	NBR	SUVG-449
E076056701	630.00	605.00	19.00	18.00	FKM	SUVG-423
E076131101	630.00	613.00	13.50	12.50	NBR	SUVG-704
E076118701	636.50	611.10	20.00	19.00	PU	PUM-271
E076001103	640.00	600.00	31.00	30.00	NBR	SUVG-417
E076090801	640.33	609.60	23.22	22.22	NBR	SUVG-686
E076761001	708.02	676.27	23.22	22.22	NBR	SUVG-411
E076851101	711.20	685.80	22.00	21.00	NBR	SUVG-383
E07700C301	727.00	700.00	21.00	20.00	XNBR	SUVG-340
E077040801	735.07	704.85	23.22	22.22	NBR	SUVG-687
E077201103	760.00	720.00	31.00	30.00	NBR	SUVG-485
E077501102	780.00	750.00	19.00	18.00	NBR	SUVG-619
E077711001	803.27	771.52	23.22	22.22	NBR	SUVG-410
E077621001	819.94	762.00	41.00	40.00	NBR	SUVG-589
E078001101	850.00	800.00	34.00	33.00	NBR	SUVG-528
E078301001	870.00	830.00	31.00	30.00	NBR	SLO-751
E078250501	881.00	825.00	23.00	22.00	NBR	SUVG-415
E078601101	890.00	860.00	28.00	27.00	NBR	SUVG-636
E079111001	942.97	911.23	23.22	22.22	NBR	SUVG-412
E079206001	970.00	920.00	33.00	32.00	CPU	CPU-160
E079991101	1033.00	1005.00	21.00	20.00	NBR	SLO-528
E079991011	1080.00	1020.00	46.00	45.00	NBR	SLO-750
E079991003	1247.60	1221.90	14.97	13.97	NBR	SLO-472
E079991102	1300.00	1265.00	26.00	25.00	NBR	SLO-605
E071425101	1450.00	1425.00	20.00	19.00	NBR	SLO-298
E079991103	1730.00	1700.00	20.00	19.00	NBR	SLO-694
E079991010	1950.00	1910.00	23.50	22.50	NBR	SLO-716

Bold sizes are readily available in stock.
Other materials are available on request.

E20

Single Acting Symmetrical Seal

DETAILS

E20 seal designed for sealing low to medium duty hydraulic cylinders. These seals are made from tough wear resistant fabric and rubber. Due to its robust design, these packing give good service even when rams and guide rings are worn.

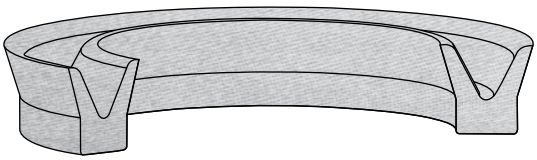

COMPATIBILITY

Mineral oils, bio oils, water soluble & water glycol fluids

MATERIAL

Nitrile Rubber with fabric reinforcement 80 Shore A
FKM with fabric reinforcement 80 Shore

APPLICATION

- Low to medium duty hydraulic cylinders, holding platforms.
- Suitable for double acting cylinders.

OPERATING CONDITIONS

Temperature Range : -20°C to + 100°C
Pressure : 200 Bar
Speed : 0.5 m/s

FEATURES

- Excellent sealability during low & medium pressure.
- Long service life.

SURFACE ROUGHNESS

Static : 1.6 µmRa
Dynamic : 0.4 µmRa

INSTALLATION & ASSEMBLY

Fabric seals are fitted in split piston/open grooves with retainer ring.

PERMISSIBLE EXTRUSION GAP	E max (mm)
50 Bar	0.60
100 Bar	0.50
200 Bar	0.40

E20

Single Acting Symmetrical Seal

MAX SPARE LIMITED
QUALITY. PRECISION. SPEED.

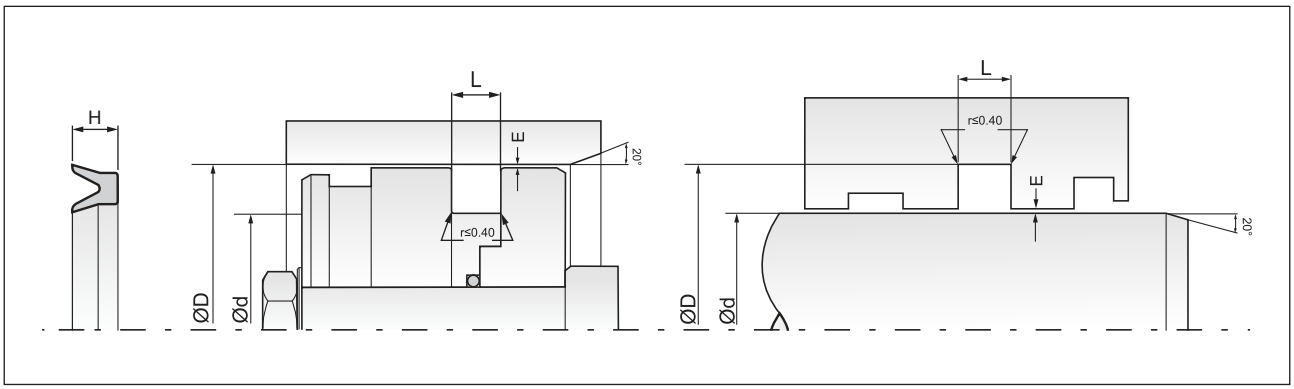

Part No.	D (H10)	d (f8/h9)	L (+0.2)	H	Material	Mould No.
E200031002	7.00	3.00	6.00	5.00	NBR	SUA-1384
E200031001	10.00	3.00	6.00	5.00	NBR	SUA-969
E200051001	10.00	5.00	5.00	4.00	NBR	SUA-867
E200061001	16.00	6.00	6.00	5.00	NBR	SUA-1011
E200110801	18.00	11.00	5.30	4.30	NBR	SUA-1604
E20008L501	22.00	8.50	8.00	7.00	PU	PUA-267
E200140607	22.00	14.00	5.50	4.50	NBR/FABRIC	SUA-1468
E200140606	22.00	14.00	6.00	5.00	NBR/FABRIC	SUA-696
E200140602	22.00	14.00	6.30	5.30	NBR/FABRIC	SUA-1050
E200148302	22.00	14.00	6.50	5.50	NBR/FABRIC	SUA-871
E200148303	22.00	14.00	7.00	6.00	NBR/FABRIC	SUA-872
E200141001	22.00	14.00	7.00	6.00	NBR	SUA-1012
E200128301	22.22	12.70	5.90	4.90	NBR/FABRIC	SUA-884
E200148301	24.00	14.00	6.00	5.00	NBR/FABRIC	SUA-787
E200140604	24.00	14.00	6.30	5.30	NBR/FABRIC	SUA-1051
E200148304	24.00	14.00	6.30	5.30	NBR/FABRIC	SUA-879
E200158306	24.00	15.00	6.30	5.30	NBR/FABRIC	SUA-873
E200158302	24.00	15.00	6.50	5.50	NBR/FABRIC	SUA-762
E200168302	24.00	16.00	5.50	4.50	NBR/FABRIC	SUA-874
E200160603	24.00	16.00	6.00	5.00	NBR/FABRIC	SUA-761
E200168501	24.00	16.00	6.40	5.40	FKM/FABRIC	SUA-2024
E200168303	24.00	16.00	6.50	5.50	NBR/FABRIC	SUA-875
E200161002	24.00	16.00	7.50	6.50	NBR	SUA-1877
E200188304	24.00	18.00	5.00	4.00	NBR/FABRIC	SUA-876
E200158301	25.00	15.00	6.00	5.00	NBR/FABRIC	SUA-667
E200158309	25.00	15.00	6.00	5.00	NBR/FABRIC	SUA-1196
E200150603	25.00	15.00	6.00	5.00	NBR/FABRIC	SUA-1700
E200158303	25.00	15.00	7.00	6.00	NBR/FABRIC	SUA-788
E200188305	25.00	18.00	5.00	4.00	NBR/FABRIC	SUA-877
E200183202	25.00	18.00	5.00	4.00	EPDM	SUA-1385
E20018T401	25.00	18.00	5.00	4.00	EPDM	SUA-1246
E200180602	25.00	18.00	5.50	4.50	NBR/FABRIC	SUA-1052
E20018A601	25.00	18.00	6.00	5.00	NBR/FABRIC	SUA-878
E200120603	25.40	12.70	6.00	5.00	NBR/FABRIC	SUB-3051
E200120604	25.40	12.70	9.00	8.00	NBR/FABRIC	SUB-3497
E200120602	25.40	12.70	9.25	8.25	NBR/FABRIC	SUB-2696
E200198501	25.40	19.05	5.50	4.50	FKM/FABRIC	SUB-1867
E200158307	26.00	15.00	6.00	5.00	NBR/FABRIC	SUB-1795
E200168502	26.00	16.00	6.00	5.00	FKM/FABRIC	SUB-3399
E200160601	26.00	16.00	6.25	5.25	NBR/FABRIC	SUB-1905
E200188309	26.00	18.00	6.40	5.40	NBR/FABRIC	SUB-2103
E200188303	26.00	18.00	7.50	6.50	NBR/FABRIC	SUB-1540
E200208308	27.00	20.00	6.00	5.00	NBR/FABRIC	SUB-2215
E200158308	28.00	15.00	7.30	6.30	NBR/FABRIC	SUB-1794
E200158304	28.00	15.00	7.50	6.50	NBR/FABRIC	SUB-1539
E200188307	28.00	18.00	7.00	6.00	NBR/FABRIC	SUB-1674
E200188302	28.00	18.00	7.30	6.30	NBR/FABRIC	SUB-1494
E200188301	28.00	18.00	7.50	6.50	NBR/FABRIC	SUB-1438
E200180601	28.00	18.00	9.00	8.00	NBR/FABRIC	SUB-1899
E200181001	28.00	18.00	9.00	8.00	NBR	SUB-3956
E200198302	28.00	19.00	6.50	5.50	NBR/FABRIC	SUB-1675
E200208306	28.00	20.00	6.00	5.00	NBR/FABRIC	SUB-1793

Part No.	D (H10)	d (f8/h9)	L (+0.2)	H	Material	Mould No.
E200200601	28.00	20.00	6.30	5.30	NBR/FABRIC	SUB-1903
E200206601	28.00	20.00	6.30	5.30	FKM/FABRIC	SUB-3027
E200208302	28.00	20.00	6.50	5.50	NBR/FABRIC	SUB-1495
E200206602	28.00	28.00	8.00	7.00	FKM	SUB-3185
E200228304	28.57	22.20	7.35	6.35	NBR/FABRIC	SUB-2667
E200158310	30.00	15.00	10.00	9.00	NBR/FABRIC	SUB-2462
E200180603	30.00	18.00	7.00	6.00	NBR/FABRIC	SUB-1904
E200206701	30.00	20.00	7.00	6.00	FKM/FABRIC	SUB-1415
E200208304	30.00	20.00	7.00	6.00	NBR/FABRIC	SUB-1676
E200208309	30.00	20.00	7.50	6.50	FKM/FABRIC	SUB-1677
E200206702	30.00	20.00	9.00	8.00	FKM	SUB-1959
E200228301	30.00	22.00	6.50	5.50	NBR/FABRIC	SUB-1678
E200228305	30.00	22.00	7.40	6.40	NBR/FABRIC	SUB-3032
E200208303	32.00	20.00	6.50	5.50	NBR/FABRIC	SUB-1496
E200200603	32.00	20.00	7.00	6.00	NBR/FABRIC	SUB-1971
E200208307	32.00	20.00	7.50	6.50	NBR/FABRIC	SUB-1792
E200201001	32.00	20.00	9.00	8.00	NBR	SUB-2298
E200228306	32.00	22.00	5.00	4.00	NBR/FABRIC	SUB-4196
E200228302	32.00	22.00	6.25	5.25	NBR/FABRIC	SUB-1679
E200228303	32.00	22.00	6.50	5.50	NBR/FABRIC	SUB-1680
E200220601	32.00	22.00	7.00	6.00	NBR/FABRIC	SUB-2114
E200221001	32.00	22.00	9.50	8.50	NBR	SUB-2300
E200240601	32.00	24.00	7.40	6.40	NBR/FABRIC	SUB-3588
E200271001	32.00	27.00	7.00	6.00	NBR	SUB-2299
E200258305	33.00	25.00	8.00	7.00	NBR/FABRIC	SUB-1791
E200268401	34.00	26.00	7.40	6.40	NBR/FABRIC	SUB-3720
E200250604	34.80	25.40	8.00	7.00	NBR/FABRIC	SUB-2699
E200250601	34.92	25.40	7.35	6.35	NBR/FABRIC	SUB-1870
E200250602	35.00	25.00	7.30	6.30	NBR/FABRIC	SUB-2115
E200248301	36.00	24.00	8.00	7.00	NBR/FABRIC	SUB-1681
E200288302	36.00	28.00	6.00	5.00	NBR/FABRIC	SUB-2295
E200288301	36.00	28.00	6.70	5.70	NBR/FABRIC	SUB-1962
E200288401	36.00	28.00	7.50	6.50	NBR/FABRIC	SUB-4193
E200301001	37.50	30.50	5.50	4.50	NBR	SUB-2372
E200180605	38.00	18.00	11.00	10.00	NBR/FABRIC	SUB-2692
E200228501	38.00	22.00	14.50	13.50	FKM/FABRIC	SUB-2748
E200250603	38.00	25.00	7.50	6.50	NBR/FABRIC	SUB-2116
E200250801	38.00	25.40	7.30	6.30	NBR	SUB-1948
E200258304	38.00	25.60	6.50	5.50	NBR/FABRIC	SUB-1517
E200261001	38.00	26.00	7.50	6.50	NBR	SUB-2801
E200300601	38.00	30.00	9.00	8.00	NBR/FABRIC	SUB-2054
E200258306	38.10	25.40	7.35	6.35	NBR/FABRIC	SUB-2320
E200290601	40.00	29.00	9.00	8.00	NBR/FABRIC	SUB-1878
E200300801	40.00	30.00	7.00	6.00	NBR	SUB-1397
E200308401	40.00	30.00	7.00	6.00	NBR/FABRIC	SUB-1385
E200301004	40.00	30.00	7.00	6.00	NBR	SUB-3369
E200308402	40.00	30.00	8.50	7.50	NBR/FABRIC	SUB-3230
E200324301	40.00	32.00	5.50	4.50	VMQ	SUB-1886
E200320601	40.00	32.00	7.30	6.30	NBR/FABRIC	SUB-3598
E200218401	41.27	21.60	12.00	11.00	NBR/FABRIC	SUB-2910
E200288303	41.27	28.60	7.35	6.35	NBR/FABRIC	SUB-2359
E200228305	42.46	22.22	13.70	12.70	NBR/FABRIC	SUB-3544

Bold sizes are readily available in stock.
Other materials are available on request.

E20

Single Acting Symmetrical Seal

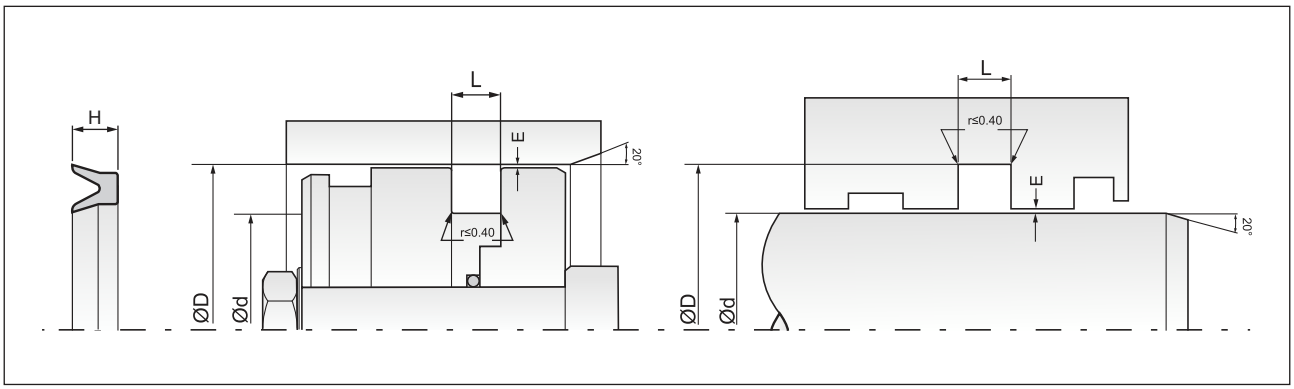

Part No.	D (H10)	d (f8/h9)	L (+0.2)	H	Material	Mould No.
E200368303	44.00	36.00	7.00	6.00	NBR/FABRIC	SUB-1963
E200318303	44.45	31.80	7.35	6.35	NBR/FABRIC	SUB-2106
E20006L501	45.00	6.00	17.00	16.00	PU	PUB-1225
E200300602	45.00	30.00	11.50	10.50	NBR/FABRIC	SUB-2489
E200358502	45.00	35.00	8.30	7.30	FKM/FABRIC	SUB-3413
E200350604	45.00	35.00	9.00	8.00	NBR/FABRIC	SUB-2405
E200360601	46.00	36.00	9.00	8.00	NBR/FABRIC	SUB-111
E200366701	46.00	36.00	11.00	10.00	FKM	SUB-1443
E200358306	46.73	35.71	5.77	4.77	NBR/FABRIC	SUB-2029
E200351001	46.73	35.71	5.77	4.77	NBR	SUB-2285
E200348304	46.99	34.92	7.35	6.35	NBR/FABRIC	SUB-2105
E200350602	47.00	35.00	8.00	7.00	NBR/FABRIC	SUB-2061
E200350607	48.00	35.00	7.00	6.00	NBR/FABRIC	SUB-3845
E200358301	48.00	35.00	7.50	6.50	NBR/FABRIC	SUB-1444
E200350608	48.00	35.00	8.00	7.00	NBR/FABRIC	SUB-3974
E200360601	48.00	36.00	10.50	9.50	NBR/FABRIC	SUB-3061
E200350606	49.00	35.00	8.00	7.00	NBR/FABRIC	SUB-2779
E200308501	50.00	30.00	16.00	15.00	FKM/FABRIC	SUB-1390
E200358307	50.00	35.00	9.00	8.00	NBR/FABRIC	SUB-2375
E20035A603	50.00	35.00	9.50	8.50	NBR/FABRIC	SUB-1432
E200350605	50.00	35.00	11.00	10.00	NBR/FABRIC	SUB-194
E20038AI02	50.00	38.00	9.00	8.00	VMQ	SUB-3528
E200400603	50.00	40.00	7.40	6.40	NBR/FABRIC	SUB-2336
E200408303	50.00	40.00	8.30	7.30	NBR/FABRIC	SUB-1964
E200400605	50.00	40.00	8.50	7.50	NBR/FABRIC	SUB-2882
E200408301	50.00	40.00	11.00	10.00	NBR	SUB-1190
E200421101	50.00	42.00	8.50	7.50	NBR	SUB-2156
E200441001	50.00	44.00	9.00	8.00	NBR	SUB-2301
E200348302	50.80	34.92	9.75	8.75	NBR/FABRIC	SUC-1448
E200350607	50.80	35.71	9.50	8.50	NBR/FABRIC	SUC-2122
E200388307	50.80	38.10	7.35	6.35	NBR/FABRIC	SUC-1710
E200378303	52.00	37.60	9.00	8.00	NBR/FABRIC	SUC-1935
E20038AI01	52.00	38.00	9.00	8.00	VMQ	SUC-2320
E200388306	53.97	38.10	12.25	11.25	NBR/FABRIC	SUC-1701
E200418302	53.97	41.30	7.35	6.35	NBR/FABRIC	SUC-1776
E200301002	54.90	30.75	16.00	15.00	NBR	SUC-2018
E200301003	54.90	30.75	16.00	15.00	NBR	SUC-2120
E200400604	55.00	40.00	6.50	5.50	NBR/FABRIC	SUC-1911
E200406701	55.00	40.00	10.50	9.50	FKM	SUC-2436
E200408302	55.00	40.00	11.00	10.00	NBR/FABRIC	SUC-930
E200456701	55.00	45.00	11.00	10.00	FKM	SUC-1021
E200440601	57.00	44.00	10.50	9.50	NBR/FABRIC	SUC-1988
E20049A601	57.00	49.00	9.50	8.50	NBR/FABRIC	SUC-2758
E200378302	57.15	37.10	10.00	9.00	NBR/FABRIC	SUC-1338
E200478501	57.15	47.62	7.50	6.50	FKM/FABRIC	SUC-1351
E200450604	60.00	45.00	11.50	10.50	NBR/FABRIC	SUC-2106
E20050A601	60.00	50.00	8.00	7.00	NBR/FABRIC	SUC-2614
E200388301	60.32	38.10	19.00	18.00	NBR/FABRIC	SUC-235
E200450602	63.00	45.00	11.00	10.00	NBR/FABRIC	SUC-1616
E200450603	63.00	45.00	13.00	12.00	NBR/FABRIC	SUC-1795
E200468303	63.00	46.00	9.00	8.00	NBR/FABRIC	SUC-1924
E200476501	63.00	47.00	8.80	7.80	FKM	SUC-1851

Part No.	D (H10)	d (f8/h9)	L (+0.2)	H	Material	Mould No.
E200470603	63.00	47.00	12.50	11.50	NBR/FABRIC	SUC-1535
E200448304	63.50	44.50	11.00	10.00	NBR/FABRIC	SUC-330
E20045A604	63.50	45.00	12.00	11.00	NBR/FABRIC	SUC-2609
E200480601	63.50	48.00	14.00	13.00	NBR/FABRIC	SUC-1767
E200508501	63.50	50.00	9.50	8.50	FKM/FABRIC	SUC-298
E200531001	63.50	53.97	5.76	4.76	NBR	SUC-2724
E200458307	65.00	45.00	11.00	10.00	NBR/FABRIC	SUC-1586
E200458310	65.00	45.00	13.00	12.00	NBR/FABRIC	SUC-2666
E200458302	65.00	45.00	19.00	18.00	NBR/FABRIC	SUC-175
E200500603	65.00	50.00	9.00	8.00	NBR/FABRIC	SUC-2047
E200508306	65.00	50.00	9.50	8.50	NBR/FABRIC	SUC-1334
E200566701	66.00	56.00	11.00	10.00	FKM	SUC-965
E200608305	68.00	60.00	14.00	13.00	NBR/FABRIC	SUC-1051
E200521101	69.00	52.00	10.00	9.00	NBR	SUC-2253
E200508309	69.85	50.80	10.52	9.52	NBR/FABRIC	SUC-1769
E200450601	70.00	45.00	13.50	12.50	NBR/FABRIC	SUC-1363
E200508305	70.00	50.00	11.00	10.00	NBR/FABRIC	SUC-1201
E200508308	70.00	50.00	11.00	10.00	NBR/FABRIC	SUC-1655
E200608304	70.00	60.00	11.00	10.00	NBR/FABRIC	SUC-940
E200568303	71.00	56.00	12.50	11.50	NBR/FABRIC	SUC-19126
E200580602	72.00	58.00	9.00	8.00	NBR/FABRIC	SUC-1665
E200458301	75.00	45.00	21.00	20.00	NBR/FABRIC	SUC-1750
E200508311	75.00	50.00	13.00	12.00	NBR/FABRIC	SUC-2342
E200508304	75.00	50.00	16.00	15.00	NBR/FABRIC	SUC-304
E200588305	75.00	58.00	13.00	12.00	NBR/FABRIC	SUC-1723
E200600605	75.00	60.00	13.00	12.00	NBR/FABRIC	SUC-1664
E200631101	76.10	63.50	10.30	9.30	NBR	SUD-1837
E200571001	76.20	57.15	13.19	12.19	NBR/FABRIC	SUD-1353
E200578303	76.20	57.15	15.00	14.00	NBR/FABRIC	SUD-884
E200600607	76.20	60.20	10.70	9.70	NBR/FABRIC	SUD-1495
E200578302	76.50	57.20	15.00	14.00	NBR/FABRIC	SUD-825
E200520601	77.00	52.00	9.00	8.00	NBR/FABRIC	SUD-106
E200571002	77.79	57.94	13.70	12.70	NBR/FABRIC	SUD-1368
E200500602	78.00	50.00	12.50	11.50	NBR/FABRIC	SUD-1109
E200548301	78.00	54.00	13.00	12.00	NBR/FABRIC	SUD-812
E200550603	78.00	55.00	13.00	12.00	NBR/FABRIC	SUD-1609
E200588302	78.00	58.00	11.00	10.00	NBR/FABRIC	SUD-760
E200588301	78.00	58.00	13.00	12.00	NBR/FABRIC	SUD-681
E200580601	78.00	58.00	15.00	14.00	NBR/FABRIC	SUD-999
E200630601	78.00	63.00	26.00	25.00	NBR/FABRIC	SUD-1791
E200550602	78.16	55.16	13.70	12.70	NBR/FABRIC	SUD-1381
E200588401	78.42	58.42	14.50	13.50	NBR/FABRIC	SUD-2059
E200580603	78.50	58.00	14.00	13.00	NBR/FABRIC	SUD-1597
E200598302	79.00	59.00	13.00	12.00	NBR/FABRIC	SUD-827
E200550601	80.00	55.00	15.00	14.00	NBR/FABRIC	SUD-1365
E200608303	80.00	60.00	11.00	10.00	NBR/FABRIC	SUD-801
E200608308	80.00	60.00	11.00	10.00	NBR/FABRIC	SUD-1275
E200608306	80.00	60.00	13.00	12.00	NBR/FABRIC	SUD-834
E200600602	80.00	60.00	14.00	13.00	NBR/FABRIC	SUD-1192
E200600601	80.00	60.00	15.00	14.00	NBR	SUD-988
E200600603	80.00	60.00	16.00	15.00	NBR/FABRIC	SUD-1216
E200608402	80.00	60.00	16.50	15.50	NBR/FABRIC	SUD-1680

Bold sizes are readily available in stock.
Other materials are available on request.

E20

Single Acting Symmetrical Seal

MAX SPARE LIMITED
QUALITY. PRECISION. SPEED.

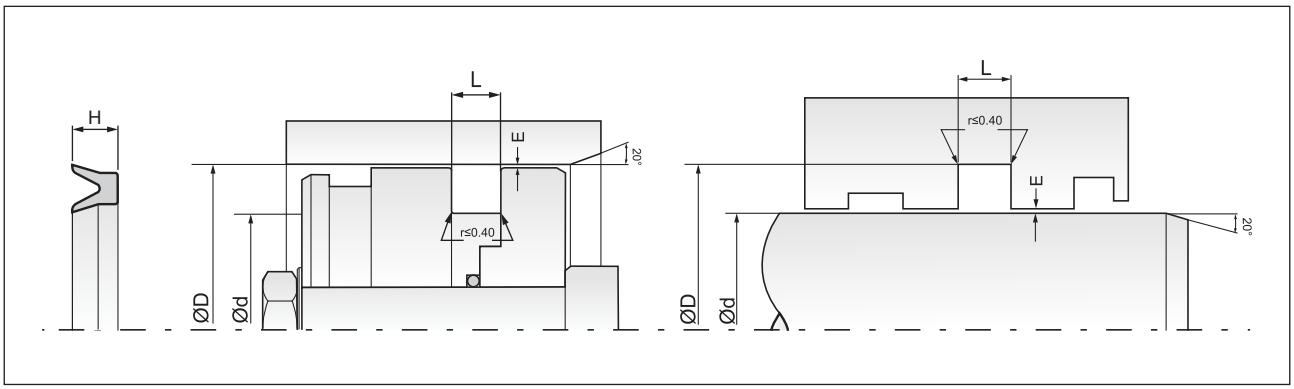

Part No.	D (H10)	d (f8/h9)	L (+0.2)	H	Material	Mould No.
E200608310	80.00	60.00	17.00	16.00	NBR/FABRIC	SUD-1565
E200658304	80.15	65.08	9.00	8.00	NBR/FABRIC	SUD-1021
E200708306	82.00	70.00	10.00	9.00	NBR/FABRIC	SUD-828
E200708501	82.00	70.00	15.30	14.30	FKM/FABRIC	SUD-954
E20063A601	82.55	63.50	13.70	12.70	NBR/FABRIC	SUD-575
E200683401	83.00	68.00	12.50	11.50	EPDM/FABRIC	SUD-859
E200658305	85.00	65.00	13.00	12.00	NBR/FABRIC	SUD-1274
E200700603	85.00	70.00	9.50	8.50	NBR/FABRIC	SUD-1306
E200700604	85.00	70.00	13.00	12.00	NBR/FABRIC	SUD-1431
E200421001	86.00	42.00	26.00	25.00	NBR	SUD-949
E200678302	86.00	67.00	13.00	12.00	NBR/FABRIC	SUD-800
E200781101	86.00	78.00	9.00	8.00	NBR	SUD-824
E200781101	86.00	78.00	9.00	8.00	NBR	SUD-972
E200788302	86.00	78.00	14.00	13.00	NBR/FABRIC	SUD-807
E200780601	86.00	78.00	14.50	13.50	NBR/FABRIC	SUD-1644
E200678303	87.00	67.00	13.00	12.00	NBR/FABRIC	SUD-813
E200788303	88.00	78.00	15.50	14.50	NBR/FABRIC	SUD-897
E200638303	88.90	63.50	14.50	13.50	NBR/FABRIC	SUD-1511
E200698301	88.90	69.90	13.70	12.70	NBR/FABRIC	SUD-854
E200761001	88.90	76.20	8.14	7.14	NBR	SUD-970
E200768501	88.90	76.20	9.50	8.50	FKM/FABRIC	SUD-982
E2007083605	90.00	70.00	9.00	8.00	NBR/FABRIC	SUD-1263
E200701101	90.00	70.00	15.00	14.00	NBR/FABRIC	SUD-989
E200858304	93.00	85.00	13.00	12.00	NBR/FABRIC	SUD-898
E200658303	95.00	65.00	13.00	12.00	NBR/FABRIC	SUD-908
E20080L501	95.00	80.00	15.00	14.00	PU	PUD-1068
E200760601	95.25	76.20	10.52	9.52	NBR/FABRIC	SUD-1133
E200826602	96.00	82.00	9.00	8.00	FKM	SUD-1176
E200878401	98.00	87.00	13.00	12.00	NBR/FABRIC	SUD-2049
E200708401	100.00	70.00	16.00	15.00	NBR/FABRIC	SUD-975
E200758307	100.00	75.00	11.00	10.00	NBR/FABRIC	SUD-1681
E200758306	100.00	75.00	16.00	15.00	NBR/FABRIC	SUD-1085
E200770601	100.00	77.00	13.00	12.00	NBR/FABRIC	SUD-977
E200800602	100.00	80.00	9.50	8.50	NBR/FABRIC	SUD-1593
E200808311	100.00	80.00	13.00	12.00	NBR/FABRIC	SUD-1625
E200808307	100.00	80.00	13.50	12.50	NBR/FABRIC	SUD-909
E200808302	100.00	80.00	14.00	13.00	NBR/FABRIC	SUD-912
E200801002	100.00	80.00	15.00	14.00	NBR/FABRIC	SUD-1288
E200808309	100.00	80.00	15.00	14.00	NBR/FABRIC	SUD-1474
E200800601	100.00	80.00	16.00	15.00	NBR/FABRIC	SUD-254
E200808401	100.00	80.00	16.00	15.00	NBR/FABRIC	SUD-2065
E200808312	100.00	80.00	16.70	15.70	NBR/FABRIC	SUD-1753
E200808310	100.00	80.00	17.00	16.00	NBR/FABRIC	SUD-1540
E200828304	100.00	82.00	14.00	13.00	NBR/FABRIC	SUD-1269
E200900601	100.00	90.00	12.00	11.00	NBR/FABRIC	SUD-1013
E200760801	101.60	76.20	17.50	16.50	NBR	SUE-1129
E200828302	101.60	82.00	11.00	10.00	NBR/FABRIC	SUE-597
E200826601	101.60	82.55	9.00	8.00	FKM	SUE-624
E200820603	101.60	82.55	12.90	11.90	NBR/FABRIC	SUE-853
E200828503	101.60	82.55	13.00	12.00	FKM/FABRIC	SUE-869
E200820605	101.60	82.55	13.70	12.70	NBR/FABRIC	SUE-1231
E200820801	101.60	82.56	14.00	13.00	NBR	SUE-1116

Part No.	D (H10)	d (f8/h9)	L (+0.2)	H	Material	Mould No.
E200838301	101.60	83.00	13.50	12.50	NBR/FABRIC	SUE-570
E200838302	101.60	83.18	14.30	13.30	NBR/FABRIC	SUE-860
E200800801	102.00	80.00	11.00	10.00	NBR	SUE-1055
E200828305	102.00	82.00	10.50	9.50	NBR/FABRIC	SUE-893
E200828303	102.00	82.00	11.00	10.00	NBR/FABRIC	SUE-603
E200900604	102.00	90.00	7.00	6.00	NBR/FABRIC	SUE-101
E200860701	104.00	86.00	11.00	10.00	NBR/FABRIC	SUE-1247
E200908304	104.00	90.00	13.00	12.00	NBR/FABRIC	SUE-525
E200908401	104.00	90.00	13.00	12.00	NBR/FABRIC	SUE-1264
E200850701	105.00	85.00	11.00	10.00	NBR/FABRIC	SUE-1248
E200858306	105.00	85.00	13.00	12.00	NBR/FABRIC	SUE-915
E200908501	105.00	90.00	9.50	8.50	FKM/FABRIC	SUE-1151
E200908307	105.00	90.00	10.10	9.10	NBR/FABRIC	SUE-715
E200900605	105.00	90.00	16.00	15.00	NBR/FABRIC	SUE-1450
E200978302	105.00	97.00	14.00	13.00	NBR/FABRIC	SUE-549
E200970601	105.00	97.00	14.50	13.50	NBR/FABRIC	SUE-1131
E200858302	105.60	85.00	13.00	12.00	NBR/FABRIC	SUE-612
E200868401	106.00	86.00	14.00	13.00	NBR/FABRIC	SUE-1386
E200978303	107.00	97.00	15.50	14.50	NBR/FABRIC	SUE-621
E200820601	107.95	82.55	13.70	12.70	NBR/FABRIC	SUE-711
E200858303	107.95	85.55	13.70	12.70	NBR/FABRIC	SUE-620
E200898301	108.00	89.00	11.00	10.00	NBR/FABRIC	SUE-598
E200800604	110.00	80.00	17.00	16.00	NBR/FABRIC	SUE-1184
E200858305	110.00	85.00	11.00	10.00	NBR/FABRIC	SUE-676
E200908305	110.00	90.00	11.00	10.00	NBR/FABRIC	SUE-594
E200908308	110.00	90.00	14.00	13.00	NBR/FABRIC	SUE-787
E200908309	110.00	90.00	16.00	15.00	NBR/FABRIC	SUE-1357
E200910601	111.12	91.94	13.70	12.70	NBR/FABRIC	SUE-1387
E200950602	112.00	95.00	12.20	11.20	NBR/FABRIC	SUE-1321
E201058305	113.00	105.00	13.00	12.00	NBR/FABRIC	SUE-622
E200888302	114.30	88.90	13.70	12.70	NBR/FABRIC	SUE-595
E200958301	114.30	95.25	16.87	15.87	NBR/FABRIC	SUE-572
E200858307	115.00	85.00	16.00	15.00	NBR/FABRIC	SUE-1282
E200880601	115.00	88.00	20.50	19.50	NBR/FABRIC	SUE-1142
E200900602	115.00	90.00	16.00	15.00	NBR/FABRIC	SUE-743
E200958303	115.00	95.00	13.00	12.00	NBR/FABRIC	SUE-889
E200958302	115.00	95.00	16.00	15.00	NBR/FABRIC	SUE-127
E200980602	115.00	98.00	12.50	11.50	NBR/FABRIC	SUE-1140
E201008311	120.00	100.00	11.00	10.00	NBR/FABRIC	SUE-655
E201000604	120.00	100.00	11.50	10.50	NBR/FABRIC	SUE-708
E201000605	120.00	100.00	13.00	12.00	NBR/FABRIC	SUE-709
E201008315	120.00	100.00	13.50	12.50	NBR/FABRIC	SUE-1360
E201016601	120.65	101.60	13.50	12.50	NBR	SUE-1165
E201000602	122.00	100.00	15.50	14.50	NBR/FABRIC	SUE-679
E201100605	122.00	110.00	15.00	14.00	NBR/FABRIC	SUE-1213
E200980601	125.00	98.00	21.00	20.00	NBR/FABRIC	SUE-1141
E200980701	125.00	98.00	22.00	21.00	NBR/FABRIC	SUE-1246
E200990601	125.00	99.00	15.00	14.00	NBR/FABRIC	SUE-698
E201000610	125.00	100.00	11.00	10.00	NBR/FABRIC	SUE-900
E201000601	125.00	100.00	15.50	14.50	NBR/FABRIC	SUE-675
E201008307	125.00	100.00	16.00	15.00	NBR/FABRIC	SUE-596
E201000609	125.00	100.00	18.70	17.70	NBR/FABRIC	SUE-554

Bold sizes are readily available in stock.
Other materials are available on request.

E20

Single Acting Symmetrical Seal

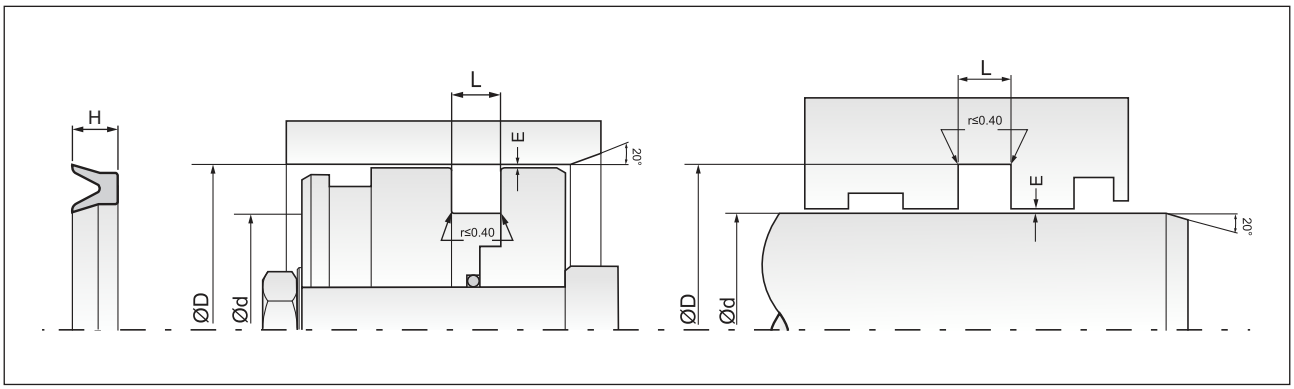

Part No.	D (H10)	d (f8/h9)	L (+0.2)	H	Material	Mould No.
E2001008308	125.00	100.00	19.50	18.50	NBR/FABRIC	SUE-369
E201008306	125.00	100.00	20.00	19.00	NBR/FABRIC	SUE-267
E201008303	125.00	100.00	21.00	20.00	NBR/FABRIC	SUE-650
E201000611	125.00	100.00	22.00	21.00	NBR/FABRIC	SUE-1110
E201028401	125.00	102.00	21.00	20.00	NBR/FABRIC	SUE-1394
E201041001	125.00	104.00	21.00	20.00	NBR/FABRIC	SUE-1113
E201058401	125.00	105.00	14.00	13.00	NBR/FABRIC	SUE-928
E201056401	125.00	105.00	16.00	15.00	FKM	SUE-717
E201078302	125.00	107.00	12.50	11.50	NBR/FABRIC	SUE-1198
E201168301	126.00	116.00	15.50	14.50	NBR/FABRIC	SUF-468
E201188302	126.00	118.00	14.00	13.00	NBR/FABRIC	SUF-424
E201188301	126.00	118.00	15.00	14.00	NBR/FABRIC	SUF-372
E201018302	127.00	101.60	13.70	12.70	NBR/FABRIC	SUF-459
E201010601	127.00	101.60	20.05	19.05	NBR/FABRIC	SUF-821
E201030612	127.00	103.00	13.00	12.00	NBR/FABRIC	SUF-798
E201030602	127.00	103.00	14.00	13.00	NBR/FABRIC	SUF-692
E201078301	127.00	107.95	13.70	12.70	NBR/FABRIC	SUF-463
E201156201	127.70	115.00	7.35	6.35	FKM/FABRIC	SUF-506
E201038302	127.75	103.80	14.00	13.00	NBR/FABRIC	SUF-808
E201100601	128.00	110.00	11.00	10.00	NBR/FABRIC	SUF-534
E201030611	130.00	100.00	13.00	12.00	NBR/FABRIC	SUF-696
E201058304	130.00	105.00	16.00	15.00	NBR/FABRIC	SUF-464
E201058303	130.00	105.00	21.00	20.00	NBR/FABRIC	SUF-461
E201108301	130.00	110.00	16.00	15.00	NBR/FABRIC	SUF-460
E201038301	130.50	103.00	17.00	16.00	NBR/FABRIC	SUF-583
E201000606	132.00	100.00	18.00	17.00	NBR/FABRIC	SUF-535
E201258303	133.00	125.00	13.00	12.00	NBR/FABRIC	SUF-471
E201030603	135.00	103.00	16.00	15.00	NBR/FABRIC	SUF-852
E201100603	135.00	110.00	13.00	12.00	NBR/FABRIC	SUF-572
E201108303	135.00	110.00	22.00	21.00	NBR/FABRIC	SUF-517
E201120601	135.00	112.00	16.00	15.00	NBR/FABRIC	SUF-536
E201150602	135.00	115.00	14.00	13.00	NBR/FABRIC	SUF-916
E201158302	135.00	115.00	17.50	16.50	NBR/FABRIC	SUF-748
E201278304	135.00	127.00	13.00	12.00	NBR/FABRIC	SUF-469
E201100602	137.00	110.00	16.00	15.00	NBR/FABRIC	SUF-537
E201048304	140.00	104.00	21.00	20.00	NBR/FABRIC	SUF-905
E20110A602	140.00	110.00	16.00	15.00	NBR/FABRIC	SUF-1007
E20110A601	140.00	110.00	16.00	15.00	NBR/FABRIC	SUF-942
E201108302	140.00	110.00	19.50	18.50	NBR/FABRIC	SUF-496
E201140601	140.00	114.30	15.50	14.50	NBR/FABRIC	SUF-768
E201150601	140.00	115.00	21.50	20.50	NBR/FABRIC	SUF-714
E201200602	140.00	120.00	13.00	12.00	NBR/FABRIC	SUF-532
E201208304	140.00	120.00	13.00	12.00	NBR/FABRIC	SUF-465
E201200603	140.00	120.00	16.00	15.00	NBR/FABRIC	SUF-773
E201358304	145.00	135.00	15.50	14.50	NBR/FABRIC	SUF-470
E20122A601	146.00	122.80	20.00	19.00	NBR/FABRIC	SUF-936
E20123A601	146.00	123.25	20.00	19.00	NBR/FABRIC	SUF-954
E20127A601	146.05	127.00	13.70	12.70	NBR/FABRIC	SUF-1016
E201270603	147.00	127.00	13.80	12.80	NBR/FABRIC	SUF-835
E201108305	148.00	110.00	20.00	19.00	NBR/FABRIC	SUF-889
E201100604	150.00	110.00	18.00	17.00	NBR/FABRIC	SUF-613
E201208303	150.00	120.00	16.00	15.00	NBR/FABRIC	SUF-462

Part No.	D (H10)	d (f8/h9)	L (+0.2)	H	Material	Mould No.
E201200601	150.00	120.00	27.00	26.00	NBR/FABRIC	SUF-513
E201258305	150.00	125.00	14.00	13.00	NBR/FABRIC	SUF-717
E201308303	150.00	130.00	16.00	15.00	NBR/FABRIC	SUF-656
E201438302	151.00	143.00	14.00	13.00	NBR/FABRIC	SUG-375
E201270602	152.00	127.00	22.00	21.00	NBR/FABRIC	SUG-599
E201148303	152.40	114.30	16.60	15.60	NBR/FABRIC	SUG-435
E201278305	152.40	127.00	13.70	12.70	NBR/FABRIC	SUG-438
E201278308	152.40	127.00	21.00	20.00	NBR/FABRIC	SUG-490
E201336602	152.40	133.35	18.50	17.50	FKM	SUG-672
E201336601	152.40	133.35	20.05	19.05	FKM	SUG-288
E201360401	152.40	136.52	8.93	7.93	NBR	SUG-877
E201386601	152.40	138.40	8.50	7.50	FKM	SUG-659
E201308401	153.00	138.00	13.00	12.00	NBR/FABRIC	SUG-751
E201458303	153.00	145.00	13.00	12.00	NBR/FABRIC	SUG-421
E201308302	154.00	130.00	18.00	17.00	NBR/FABRIC	SUG-576
E201100605	155.00	110.00	21.00	20.00	NBR/FABRIC	SUG-783
E201308304	156.00	130.00	18.00	17.00	NBR/FABRIC	SUG-707
E201308301	160.00	130.00	19.00	18.00	NBR/FABRIC	SUG-408
E201318302	160.00	131.00	16.00	15.00	FKM/FABRIC	SUG-756
E201358501	160.00	135.00	19.00	18.00	FKM/FABRIC	SUG-340
E201358305	160.00	135.00	19.20	18.20	NBR/FABRIC	SUG-452
E201351001	160.00	135.00	19.30	18.30	NBR	SUG-681
E201358502	160.00	135.00	19.50	18.50	FKM/FABRIC	SUG-720
E201350601	160.00	135.00	21.00	20.00	NBR	SUG-618
E201408501	160.00	140.00	14.00	13.00	FKM	SUG-638
E201400604	160.00	140.00	16.30	15.30	NBR/FABRIC	SUG-706
E201400601	160.00	140.00	17.00	16.00	NBR/FABRIC	SUG-468
E201408304	160.00	140.00	18.20	17.20	NBR/FABRIC	SUG-642
E201458303	160.00	145.00	10.20	9.20	NBR/FABRIC	SUG-462
E201528303	160.00	152.00	13.00	12.00	NBR/FABRIC	SUG-419
E201258302	165.00	125.00	21.00	20.00	NBR/FABRIC	SUG-404
E201358301	165.00	135.00	26.00	25.00	NBR/FABRIC	SUG-360
E201558301	165.00	155.00	15.50	14.50	NBR/FABRIC	SUG-420
E201408303	170.00	140.00	19.00	18.00	NBR/FABRIC	SUG-409
E201400605	170.00	140.00	19.70	18.70	NBR/FABRIC	SUG-715
E201400603	170.00	140.00	20.30	19.30	NBR/FABRIC	SUG-697
E201358303	175.00	135.00	21.00	20.00	NBR/FABRIC	SUG-405
E20150A601	175.00	150.00	15.50	14.50	NBR/FABRIC	SUG-849
E201500601	175.00	150.00	21.00	20.00	NBR/FABRIC	SUG-527
E201508305	175.00	150.00	22.00	21.00	NBR/FABRIC	SUG-453
E201568301	177.80	156.43	14.70	13.70	NBR/FABRIC	SUH-402
E201718301	179.00	171.00	15.00	14.00	NBR/FABRIC	SUH-233
E201408401	180.00	140.00	16.00	15.00	NBR/FABRIC	SUH-549
E201508303	180.00	150.00	19.00	18.00	NBR/FABRIC	SUH-289
E20150A602	180.00	150.00	20.50	19.50	NBR/FABRIC	SUH-534
E20150A603	180.00	150.00	23.00	22.00	NBR/FABRIC	SUH-535
E201508304	180.00	150.00	26.00	25.00	NBR/FABRIC	SUH-290
E201558302	180.00	155.00	21.00	20.00	NBR/FABRIC	SUH-307
E201550601	180.00	155.00	25.00	24.00	NBR/FABRIC	SUH-395
E201528302	184.15	152.40	19.50	18.50	NBR/FABRIC	SUH-291
E201600601	185.00	160.00	21.00	20.00	NBR/FABRIC	SUH-329
E201758301	185.00	175.00	15.50	14.50	NBR/FABRIC	SUH-301

Bold sizes are readily available in stock.
Other materials are available on request.

E20

Single Acting Symmetrical Seal

MAX SPARE LIMITED
QUALITY. PRECISION. SPEED.

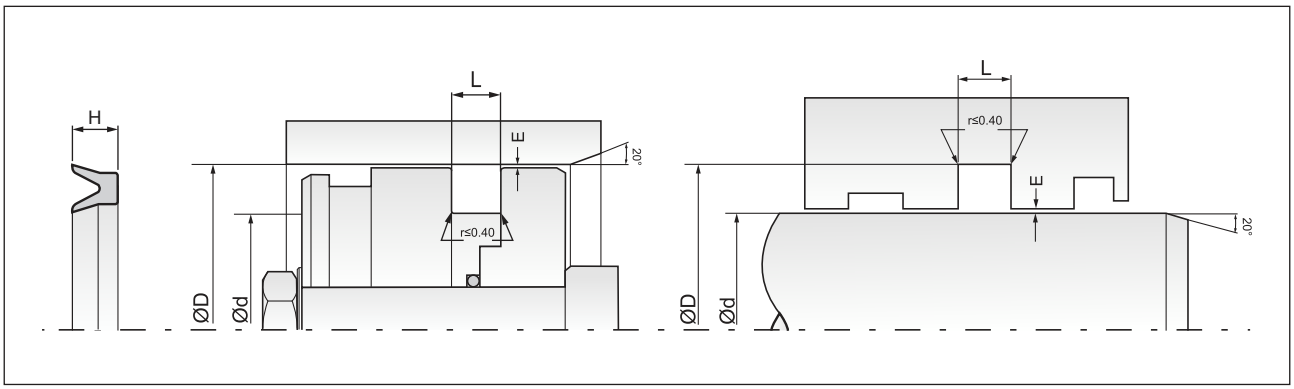

Part No.	D (H10)	d (f8/h9)	L (+0.2)	H	Material	Mould No.
E201808301	188.00	180.00	13.00	12.00	NBR/FABRIC	SUH-302
E20160A601	190.00	160.00	17.00	16.00	NBR/FABRIC	SUH-508
E201608401	190.00	160.00	19.00	18.00	NBR/FABRIC	SUH-453
E201608302	190.00	160.00	19.00	18.00	NBR/FABRIC	SUH-292
E201600603	190.00	160.00	26.00	25.00	NBR/FABRIC	SUH-259
E201708302	190.00	170.00	16.00	15.00	NBR/FABRIC	SUH-299
E201758401	199.00	175.00	16.00	15.00	NBR/FABRIC	SUH-520
E201508302	200.00	150.00	26.00	25.00	NBR/FABRIC	SUH-285
E201608402	200.00	160.00	16.00	15.00	NBR/FABRIC	SUH-456
E201600604	200.00	160.00	26.00	25.00	NBR/FABRIC	SUH-338
E201658502	200.00	165.00	21.00	20.00	FKM/FABRIC	SUH-347
E201658303	200.00	165.00	23.00	22.00	NBR/FABRIC	SUH-261
E201658501	200.00	165.50	18.00	17.00	FKM/FABRIC	SUH-320
E201688401	200.00	168.30	24.50	23.50	NBR/FABRIC	SUH-527
E201706201	200.00	170.00	16.00	15.00	FKM/FABRIC	SUH-324
E201708304	200.00	170.00	17.50	16.50	NBR/FABRIC	SUH-449
E201700602	200.00	170.00	21.00	20.00	NBR/FABRIC	SUH-300
E201708305	200.00	170.00	24.00	23.00	NBR/FABRIC	SUH-463
E201740601	200.00	174.50	18.00	17.00	NBR/FABRIC	SUH-424
E201750601	200.00	175.00	16.00	15.00	NBR/FABRIC	SUH-339
E201660701	201.00	166.00	26.00	25.00	NBR/FABRIC	SUJ-393
E201658302	203.20	165.10	22.00	21.00	NBR/FABRIC	SUJ-225
E201848302	203.20	184.15	13.70	12.70	NBR/FABRIC	SUJ-390
E201968301	206.00	196.00	15.50	14.50	NBR/FABRIC	SUJ-254
E201818301	208.00	181.00	17.30	16.30	NBR/FABRIC	SUJ-266
E201811001	208.00	181.60	17.50	16.50	NBR/FABRIC	SUJ-365
E201400602	210.00	140.00	21.00	20.00	NBR/FABRIC	SUJ-226
E20180A601	210.00	180.00	14.00	13.00	NBR/FABRIC	SUJ-422
E201808302	210.00	180.00	20.00	19.00	NBR/FABRIC	SUJ-264
E201800601	210.00	180.00	20.00	19.00	NBR/FABRIC	SUJ-307
E201681801	211.50	168.30	26.00	25.00	CR/FABRIC	SUJ-377
E202008301	212.00	200.00	14.50	13.50	NBR/FABRIC	SUJ-263
E2018483001	215.00	184.15	19.00	18.00	NBR/FABRIC	SUJ-250
E201808303	220.00	180.00	17.00	16.00	NBR/FABRIC	SUJ-277
E201901101	220.00	190.00	16.00	15.00	NBR	SUJ-379
E201908303	220.00	190.00	19.00	18.00	NBR/FABRIC	SUJ-387
E201908302	220.00	190.00	21.00	20.00	NBR/FABRIC	SUJ-251
E201900601	220.00	190.00	23.00	22.00	NBR/FABRIC	SUJ-375
E201908301	222.25	190.50	16.87	15.87	NBR/FABRIC	SUJ-239
E201908501	222.25	190.50	16.87	15.87	FKM/FABRIC	SUJ-322
E201860601	224.00	186.00	26.00	25.00	NBR/FABRIC	SUJ-417
E201900602	225.00	190.00	27.00	26.00	NBR/FABRIC	SUJ-421
E201958301	225.00	195.00	19.00	18.00	NBR/FABRIC	SUJ-255
E201950601	225.00	195.00	24.00	23.00	NBR/FABRIC	SUJ-282
E201960601	228.60	196.85	16.87	15.87	NBR/FABRIC	SUK-224
E202038301	228.60	203.20	20.00	19.00	NBR/FABRIC	SUK-225
E202098301	228.60	209.60	13.70	12.70	NBR/FABRIC	SUK-303
E202000601	230.00	200.00	12.00	11.00	NBR/FABRIC	SUK-314
E202000602	230.00	200.00	15.00	14.00	NBR/FABRIC	SUK-313
E202208303	230.00	220.00	15.50	14.50	NBR/FABRIC	SUK-213
E202108302	235.00	210.00	21.00	20.00	NBR/FABRIC	SUK-206
E202108304	240.00	210.00	16.00	15.00	NBR/FABRIC	SUK-259

Part No.	D (H10)	d (f8/h9)	L (+0.2)	H	Material	Mould No.
E201970601	240.20	197.00	26.50	25.50	NBR/FABRIC	SUK-292
E202158301	247.65	215.90	17.00	16.00	NBR/FABRIC	SUK-214
E202108303	250.00	210.00	21.00	20.00	NBR/FABRIC	SUK-247
E202188302	250.00	218.00	22.00	21.00	NBR/FABRIC	SUK-208
E202200601	250.00	220.00	13.30	12.30	NBR/FABRIC	SUK-253
E202200603	250.00	220.00	16.00	15.00	NBR/FABRIC	SUK-273
E202208302	250.00	220.00	19.00	18.00	NBR/FABRIC	SUK-210
E202208301	250.00	220.00	23.00	22.00	NBR/FABRIC	SUK-190
E202200602	250.00	220.00	24.00	23.00	NBR/FABRIC	SUK-272
E202250601	250.00	225.00	19.00	18.00	NBR/FABRIC	SUK-237
E202308301	250.00	230.00	11.00	10.00	NBR/FABRIC	SUK-193
E202348501	250.00	234.20	17.50	16.50	FKM/FABRIC	SUK-219
E202208305	252.00	220.00	23.00	22.00	NBR/FABRIC	SUM-492
E02346701	254.00	234.95	10.52	9.52	FKM	SUM-833
E202208308	255.00	220.00	21.00	20.00	NBR/FABRIC	SUM-777
E202208304	255.00	220.00	23.00	22.00	NBR/FABRIC	SUM-490
E202201001	255.00	220.00	24.50	23.50	NBR	SUM-630
E202458302	255.00	245.00	15.50	14.50	NBR/FABRIC	SUM-467
E202238302	258.00	223.00	21.00	20.00	NBR/FABRIC	SUM-615
E202238301	258.00	223.50	20.00	19.00	NBR/FABRIC	SUM-379
E202241001	259.00	224.00	20.50	19.50	NBR/FABRIC	SUM-679
E202608302	260.00	220.00	17.00	16.00	NBR/FABRIC	SUM-636
E202258601	260.00	225.00	19.20	18.20	FKM/FABRIC	SUM-840
E202191102	260.37	219.07	31.00	30.00	NBR/FABRIC	SUM-508
E202230602	269.00	223.00	21.50	20.50	NBR/FABRIC	SUM-544
E202191103	269.87	219.07	39.00	38.00	NBR/FABRIC	SUM-533
E202458301	270.00	245.00	16.00	15.00	NBR/FABRIC	SUM-420
E202471001	270.00	247.00	20.00	19.00	NBR/FABRIC	SUM-657
E202258301	275.00	225.00	41.00	40.00	NBR/FABRIC	SUM-579
E202351001	275.00	235.00	21.00	20.00	NBR	SUM-733
E202600601	279.40	260.35	13.70	12.70	NBR/FABRIC	SUM-796
E202508302	280.00	250.00	11.00	10.00	NBR/FABRIC	SUM-417
E202500601	280.00	250.00	20.00	19.00	NBR/FABRIC	SUM-554
E202508301	280.00	250.00	21.00	20.00	NBR/FABRIC	SUM-138
E202500602	280.00	250.00	23.00	22.00	NBR/FABRIC	SUM-743
E202501001	280.00	250.00	26.00	25.00	NBR	SUM-471
E202508303	280.00	250.00	26.00	25.00	NBR/FABRIC	SUM-449
E202790602	292.10	279.40	15.28	14.28	NBR/FABRIC	SUM-580
E202700601	300.00	270.00	17.00	16.00	NBR/FABRIC	SUM-507
E202700602	300.00	270.00	21.50	20.50	NBR/FABRIC	SUM-568
E202808401	300.03	280.98	13.70	12.70	NBR/FABRIC	SUM-693
E202790601	304.80	279.40	13.70	12.70	NBR/FABRIC	SUM-582
E202850601	304.80	285.75	10.52	9.52	NBR/FABRIC	SUM-581
E202748301	305.00	274.00	26.00	25.00	NBR/FABRIC	SUM-451
E202788301	305.00	278.00	14.00	13.00	NBR/FABRIC	SUM-441
E202700603	310.00	270.00	23.00	22.00	NBR/FABRIC	SUM-745
E202808301	310.00	280.00	16.00	15.00	NBR/FABRIC	SUM-464
E202981101	317.50	298.45	10.52	9.52	NBR	SUM-375
E202708301	320.00	270.00	23.00	22.00	NBR/FABRIC	SUM-450
E202731102	323.85	273.05	39.00	38.00	NBR/FABRIC	SUM-534
E202441101	324.94	244.50	37.00	36.00	NBR/FABRIC	SUM-482
E202990601	329.00	299.00	27.00	26.00	NBR/FABRIC	SUM-577

Bold sizes are readily available in stock.
Other materials are available on request.

E20

Single Acting Symmetrical Seal

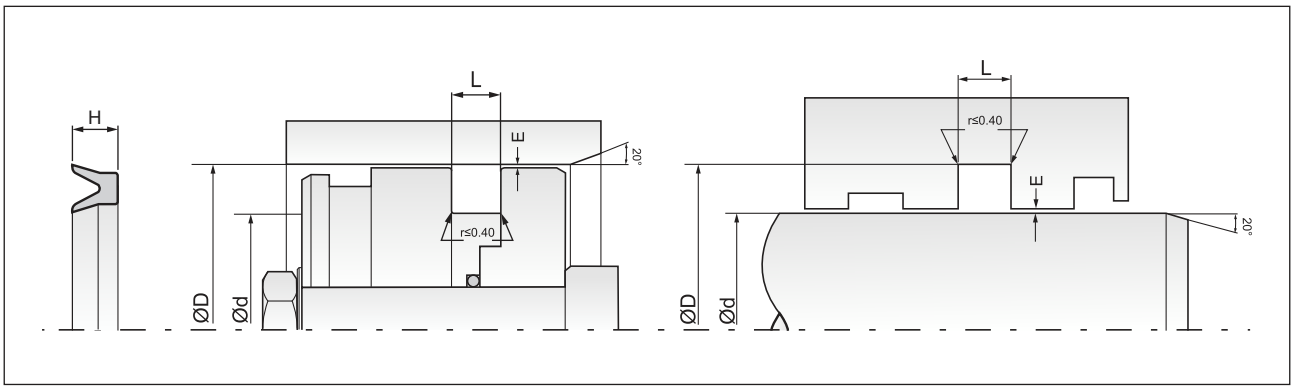

Part No.	D (H10)	d (f8/h9)	L (+0.2)	H	Material	Mould No.
E20300A601	330.00	300.00	16.00	15.00	NBR/FABRIC	SUM-825
E203210801	336.00	321.00	13.80	12.80	NBR	SUM-409
E203208301	350.00	320.00	21.00	20.00	NBR/FABRIC	SUM-453
E203200601	350.00	320.00	26.00	25.00	NBR/FABRIC	SUM-526
E203208302	360.00	320.00	23.50	22.50	NBR/FABRIC	SUM-736
E203300603	360.00	330.00	21.00	20.00	NBR/FABRIC	SUM-578
E203250601	363.00	325.00	21.00	20.00	NBR/FABRIC	SUM-662
E203358401	365.00	335.00	21.00	20.00	NBR/FABRIC	SUM-641
E203300601	370.00	330.00	21.00	20.00	NBR/FABRIC	SUM-531
E203231101	374.65	323.85	36.00	35.00	NBR/FABRIC	SUM-413
E203231103	374.65	323.85	39.00	38.00	NBR/FABRIC	SUM-535
E203508301	380.00	350.00	26.00	25.00	NBR/FABRIC	SUM-452
E203608304	385.00	360.00	16.00	15.00	NBR/FABRIC	SUM-438
E203501001	390.00	350.00	36.00	35.00	NBR	SUM-732
E203508401	400.00	350.00	26.40	25.40	NBR/FABRIC	SUM-838
E203600601	400.00	360.00	22.00	21.00	NBR/FABRIC	SUM-844
E203688301	400.00	368.00	25.00	24.00	NBR/FABRIC	SUM-439
E203700604	400.00	370.00	23.00	22.00	NBR/FABRIC	SUM-527
E203708301	400.00	370.00	26.00	25.00	NBR/FABRIC	SUM-705
E203708302	400.00	370.00	31.00	30.00	NBR/FABRIC	SUM-459
E203551102	406.40	355.60	39.00	38.00	NBR/FABRIC	SUVG-486
E203860601	407.00	386.50	15.50	14.50	NBR/FABRIC	SUVG-309
E203608303	410.00	360.00	31.00	30.00	NBR/FABRIC	SUVG-392
E203608303	410.00	360.00	31.00	30.00	NBR/FABRIC	SUVG-395
E203808301	420.00	380.00	19.00	18.00	NBR/FABRIC	SUVG-475
E203770601	425.45	377.82	20.50	19.50	NBR/FABRIC	SUVG-563
E204000601	430.00	400.00	26.00	25.00	NBR/FABRIC	SUVG-645
E203980601	434.00	398.20	16.00	15.00	NBR/FABRIC	SUVG-552

Part No.	D (H10)	d (f8/h9)	L (+0.2)	H	Material	Mould No.
E204068301	457.20	406.40	37.00	36.00	NBR/FABRIC	SUVG-351
E204061102	457.20	406.40	39.00	38.00	NBR/FABRIC	SUVG-487
E204502202	480.00	450.00	17.00	16.00	CR/FABRIC	SUVG-460
E204502201	486.00	450.00	17.00	16.00	CR/FABRIC	SUVG-459
E204571102	508.00	457.20	39.00	38.00	NBR/FABRIC	SUVG-488
E204801101	510.00	480.00	16.00	15.00	NBR	SUVG-465
E204571101	522.30	457.20	46.00	45.00	NBR/FABRIC	SUVG-439
E204700601	530.00	470.00	31.00	30.00	NBR	SUVG-586
E205000601	540.00	500.00	26.00	25.00	NBR/FABRIC	SUVG-477
E205208301	559.00	520.50	29.00	28.00	NBR/FABRIC	SUVG-104
E205400601	580.00	540.00	21.00	20.00	NBR/FABRIC	SUVG-508
E205600601	600.00	560.00	29.00	28.00	NBR/FABRIC	SUVG-621
E205961001	622.30	596.90	20.00	19.00	NBR/FABRIC	SUVG-582
E206348301	660.00	634.00	21.00	20.00	NBR/FABRIC	SUVG-523
E20669M101	711.20	669.92	21.00	20.00	HNBR/FABRIC	SUVG-646
E206738301	711.20	673.10	26.40	25.40	NBR/FABRIC	SUVG-539
E207101001	750.00	710.00	41.00	40.00	NBR	SUVG-524
E20733A601	761.00	733.00	22.00	21.00	NBR/FABRIC	SUVG-702
E207600601	800.00	760.00	41.00	40.00	NBR/FABRIC	SUVG-559
E207730601	800.00	773.00	22.00	21.00	NBR/FABRIC	SUVG-677
E207748301	800.10	774.70	20.05	19.05	NBR/FABRIC	SUVG-605
E208000601	850.00	800.00	28.00	27.00	NBR/FABRIC	SUVG-558
E208256201	850.90	825.50	23.22	22.22	FKM/FABRIC	SUVG-643
E208388401	863.60	838.20	20.05	19.05	NBR/FABRIC	SUVG-604
E208388402	914.40	889.00	20.05	19.05	NBR/FABRIC	SUVG-606
E209176201	942.97	917.57	23.22	22.22	FKM/FABRIC	SUVG-644
E209990601	1100.00	1074.00	21.00	20.00	NBR/FABRIC	SUVG-585

Bold sizes are readily available in stock.
Other materials are available on request.

E08

Single Acting Symmetrical Seal

DETAILS

E08 seals are square cross-sectional loaded symmetrical U cup for use in either rod or piston applications. It is a conventional lip seal to produce a unique sealing in a vacuum, low and high-pressure applications. At zero or low pressure, the O-ring helps to increase the sealing force preventing any bypass. Under most conditions as the pressure rises, the sealing force increases and the O-ring ensures complete lip actuation. The symmetry of this seal is suited for single-acting rod and piston applications, whereas it can also be fitted back to back in separate glands for the use in double-acting applications. To protect against pressure trapping, it is recommended that the O-ring should be removed from the seal facing the lower pressure side of the application.

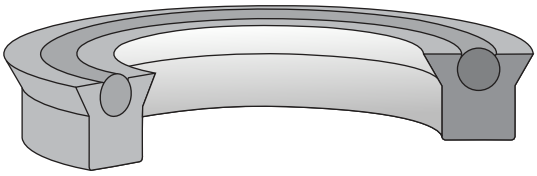

COMPATIBILITY

Mineral oils, bio oils, water soluble & water glycol fluids.

MATERIAL

U seal : Polyurethane 92 Shore A
O-Ring : Nitrile Rubber 70/75 Shore A

APPLICATION

- Medium duty hydraulic cylinders, holding platforms.
- Suitable for double acting cylinders.
- Can also be used as a Rod Seal in conjunction with S15 style Rod Seal for heavy applications.
- Can also be used in equivalent to S19 Rod Seal.

OPERATING CONDITIONS

Temperature Range : -30°C to + 100°C
Pressure : 350 Bar
Speed : 0.5 m/s

FEATURES

- Excellent sealability during low & high pressure.
- Long service life.
- Easily retrofits other seals.
- Precision trimmed sealing lips.
- Easy to install.

SURFACE ROUGHNESS

Static : 1.6 µmRa
Dynamic : 0.4 µmRa

INSTALLATION & ASSEMBLY

Careful fitting is the prerequisite for the correct functioning of the seal. Recommended to use Maxspare Seal Twistor for easy installation. The seal must be properly lubricated before installation.

PERMISSIBLE EXTRUSION GAP	E max (mm)
150 Bar	0.60
250 Bar	0.50
350 Bar	0.40

E08

Single Acting Symmetrical Seal

MAX SPARE LIMITED
QUALITY. PRECISION. SPEED.

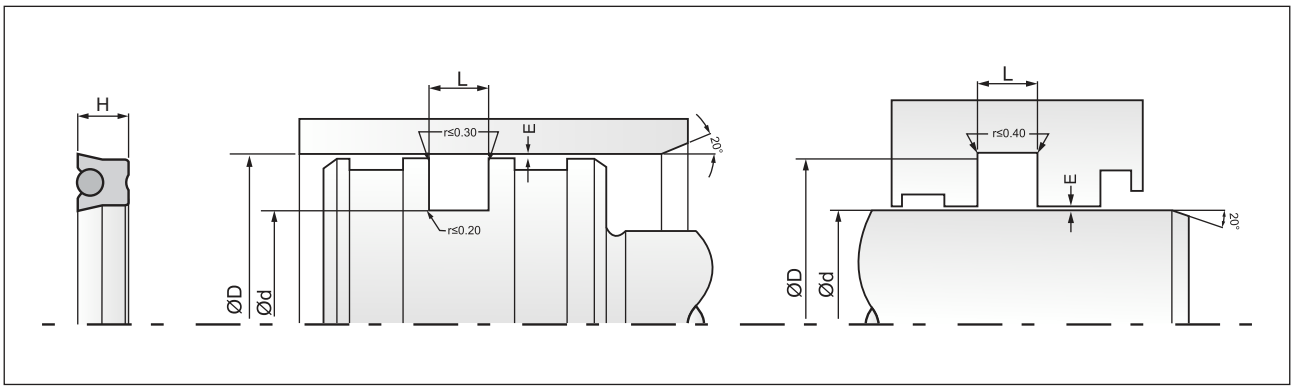

Part No.	D (H10)	d (f8/h9)	L (+0.2)	H	Material	Mould No.
E080066702	12.70	6.35	3.50	3.17	FKM	SUA-1938
E080063501	12.70	6.35	3.50	3.17	EPDM	SUA-1580
E08006K301	12.70	6.35	3.50	3.17	HYT	PUA-662
E08006L503	12.70	6.35	3.50	3.17	PU	PUA-663
E08006L502	12.70	6.40	4.25	3.25	PU	PUA-495
E08006L502	12.70	6.40	4.25	3.25	PU	PUA-251
E080076701	14.27	7.92	3.50	3.17	FKM	SUA-1857
E080096701	15.87	9.52	3.50	3.17	FKM	SUA-1798
E08009K301	15.87	9.52	3.50	3.17	HYT	PUA-688
E080093501	15.87	9.52	3.50	3.17	EPDM	SUA-2430
E08009L501	15.87	9.52	3.50	3.17	PU	PUA-755
E08011K301	17.34	11.00	4.30	3.30	HYT	PUA-604
E080113501	17.44	11.09	3.50	3.17	EPDM	SUA-2429
E080066701	19.05	6.35	3.50	3.17	FKM	SUA-1479
E080126701	19.05	12.70	3.33	3.00	FKM	SUA-1036
E08012S401	19.05	12.70	3.50	3.17	HNBR	SUA-1825
E080126702	19.05	12.70	3.50	3.17	FKM	SUA-2191
E080123501	19.05	12.70	3.50	3.17	EPDM	SUA-2131
E08012L502	19.05	12.70	4.30	3.30	PU	PUA-678
E08012K301	19.05	12.70	4.30	3.30	HYT	PUA-605
E080081101	20.50	8.00	7.30	6.60	NBR	SUA-2096
E080156701	22.22	15.87	3.50	3.17	FKM	SUA-103
E080156701	22.22	15.87	3.50	3.17	FKM	SUA-2436
E080176701	23.80	17.46	3.50	3.17	FKM	SUA-1499
E08017L505	23.81	17.46	6.98	6.35	PU	PUA-824
E08017L501	24.20	17.86	4.30	3.30	PU	PUA-653
E08019L503	25.39	19.05	4.40	3.40	PU	PUB-1711
E08012L501	25.40	12.70	6.98	6.35	PU	PUB-1035
E080186601	25.40	18.25	4.50	3.50	FKM	SUB-3917
E08019K301	25.40	19.05	3.50	3.17	HYT	PUB-1477
E080196701	25.40	19.05	3.50	3.17	FKM	SUB-3195
E08019L501	25.40	19.05	3.50	3.17	PU	PUB-662
E080193501	25.40	19.05	3.50	3.17	EPDM	SUB-3543
E080196701.	25.40	19.05	3.50	3.17	FKM	SUB-3862
E08020L501	26.00	20.00	4.25	3.25	PU	PUB-956
E080205901	27.00	20.64	4.20	3.20	PU	PUB-1106
E08019L502	28.57	19.05	5.25	4.76	PU	PUB-161
E080226701	28.57	22.22	3.50	3.17	FKM	SUB-3631
E080235701	29.36	23.02	3.50	3.17	PU	SUB-686
E080230801	29.75	23.41	4.30	3.30	PU	PUB-1869
E08022L502	31.75	22.22	5.25	4.76	PU	PUB-162
E080256801	31.75	25.40	3.50	3.17	FKM	SUB-2509
E080256703	31.75	25.40	3.50	3.17	FKM	SUB-2593
E08025K301	31.75	25.40	3.50	3.17	HYT	PUB-1475
E08026L502	33.30	26.98	3.50	3.17	PU	PUB-166
E08025S403	33.32	25.40	4.96	3.96	HNBR	SUB-3778
E08023S401	33.33	23.81	5.58	5.08	HNBR	SUB-2631
E080256705	33.33	25.40	4.96	3.96	FKM	SUB-3381
E08028L501	34.92	28.57	3.50	3.17	PU	PUB-486
E080306601	36.00	30.00	4.40	3.40	FKM	SUB-2068
E080308501	36.00	30.00	4.40	3.40	FKM/FABRIC	SRV-1581
E08029K301	36.32	29.97	3.37	3.04	HYT	PUB-1476

Part No.	D (H10)	d (f8/h9)	L (+0.2)	H	Material	Mould No.
E080296701	36.32	29.97	3.37	3.04	FKM	SUB-3194
E080306703	36.49	30.14	3.50	3.17	FKM	SUB-2956
E080306701	36.49	30.14	4.30	3.30	FKM	SUB-2493
E080306704	36.49	30.14	4.40	3.40	FKM	SUB-2985
E08030L501	36.52	30.16	3.50	3.17	PU	PUB-1755
E08025C401	38.10	25.40	10.50	9.52	XNBR	SUB-3060
E080286702	38.10	28.57	5.25	4.76	FKM	SUB-3487
E08032L502	38.48	32.14	4.30	3.30	PU	PUB-1712
E08030S401	39.68	30.16	5.25	4.76	HNBR	SUB-2165
E08032L501	40.00	32.00	5.50	5.00	PU	PUB-1036
E080257801	41.23	25.40	8.73	7.94	PU	PUB-1412
E080283501	41.27	28.57	6.98	6.35	EPDM	SUB-3542
E080311101	41.27	31.75	5.25	4.76	NBR	SUB-2922
E080316702	41.27	31.75	5.25	4.76	FKM	SUB-2920
E080346701	41.27	34.92	3.50	3.17	FKM	SUB-4217
E080366702	42.86	36.51	3.50	3.17	FKM	SUB-2711
E08036L501	42.86	36.51	3.50	3.17	PU	PUB-1094
E080366701	42.86	36.51	3.50	3.17	FKM	SUB-2444
E08025S401	44.45	25.40	10.50	9.52	HNBR	SUB-2609
E080256702	44.45	25.40	10.50	9.52	FKM	SUB-2512
E08028L502	44.45	28.57	8.73	7.94	PU	PUB-873
E080286701	44.45	28.57	8.73	7.94	FKM	SUB-2477
E080287901	44.45	28.57	8.73	7.94	HYT	PUB-1413
E08031K303	44.45	31.75	6.98	6.35	HYT	PUB-1908
E080313501	44.45	31.75	6.98	6.35	EPDM	SUB-3863
E08038D701	44.45	38.10	3.50	3.17	HNBR	SUB-2982
E08038S405	44.45	38.10	3.50	3.17	HNBR	SUB-3777
E080356701	45.00	35.00	7.20	6.50	FKM	SUB-1398
E08039D701	46.03	39.68	3.50	3.17	HNBR	SUB-3222
E080386703	47.62	38.10	5.25	4.76	FKM	SUB-3263
E08038S401	47.62	38.10	5.25	4.76	HNBR	SUB-2167
E080381101	47.62	38.10	5.25	4.76	NBR	SUB-2923
E080386702	47.62	38.10	5.25	4.76	FKM	SUB-2921
E08041S401	47.62	41.27	3.50	3.17	HNBR	SUB-3681
E080316703	50.80	31.75	10.50	9.52	FKM	SUC-2350
E08031L503	50.80	31.75	10.50	9.52	PU	PUC-1340
E08031S401	50.80	31.75	10.50	9.52	HNBR	SUC-1789
E08031S402	50.80	31.75	17.47	15.87	HNBR	SUC-2184
E08034K301	50.80	34.92	8.73	7.92	HYT	PUC-1344
E08034S401	50.80	34.92	8.73	7.93	HNBR	SUC-1815
E08038L501	50.80	38.10	6.98	6.35	PU	PUC-131
E080416702	50.80	41.27	10.50	9.53	FKM	SUC-2417
E080446703	50.80	44.45	5.25	4.76	FKM	SUC-2728
E080376701	51.81	37.08	6.98	6.35	FKM	SUC-1808
E080416701	53.97	41.27	6.98	6.35	FKM	SUC-1799
E080416701	53.97	41.27	6.98	6.35	FKM	SUC-1738
E080446702	53.97	44.45	5.23	4.74	FKM	SUC-2723
E080446704	53.97	44.45	5.25	4.76	FKM	SUC-2828
E080400801	55.00	40.00	12.77	11.50	NBR	SUC-1712
E080400901	56.00	40.00	12.57	11.30	NBR	SUC-1697
E080471101	57.00	47.00	5.50	5.00	NBR	SUC-1833
E080316701	57.15	31.75	13.97	12.70	FKM	SUC-1791

Bold sizes are readily available in stock.
Other materials are available on request.

E08

Single Acting Symmetrical Seal

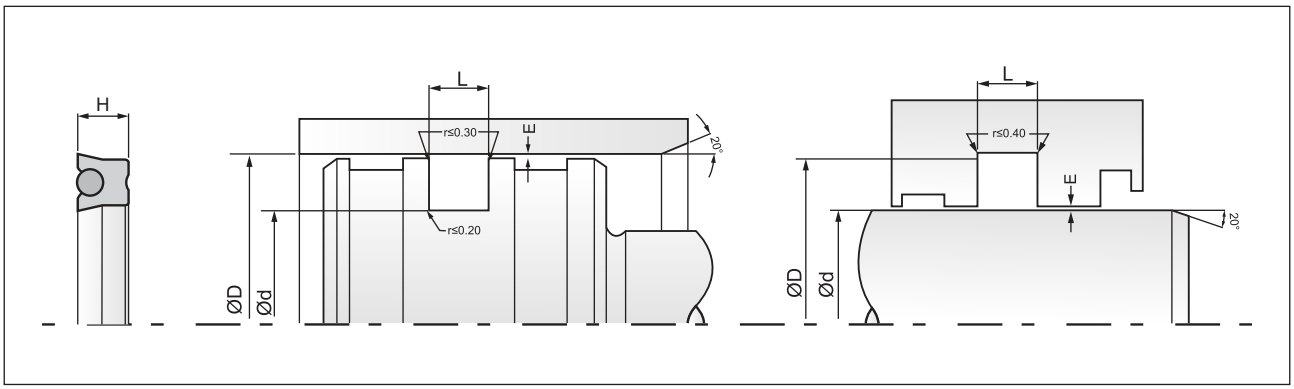

Part No.	D (H10)	d (f8/h9)	L (+0.2)	H	Material	Mould No.
E08038L503	57.15	38.10	10.50	9.52	PU	PUC-1543
E080386701	57.15	38.10	10.50	9.52	FKM	SUC-1798
E08038S402	57.15	38.10	10.50	9.52	HNBR	SUC-1790
E080386701	57.15	38.10	10.50	9.52	FKM	SUC-1887
E080446701	57.15	44.45	5.23	4.74	FKM	SUC-2691
E080476801	57.15	47.62	5.23	4.74	FKM	SUC-1752
E080476701	57.15	47.62	5.23	4.74	FKM	SUC-1517
E080496601	58.73	49.21	5.25	4.76	FKM	SUC-1406
E080505901	60.00	50.00	6.50	6.00	PU	PUC-1360
E08038S404	60.32	38.10	12.00	11.09	HNBR	SUC-2218
E08041L501	60.32	41.27	10.50	9.52	PU	PUC-1270
E080506702	60.32	50.80	5.25	4.76	FKM	SUC-2008
E080501101	60.32	50.80	5.25	4.76	NBR	SUC-2010
E080506703	60.32	50.80	5.25	4.76	FKM	SUC-2829
E08050S401	60.32	50.80	5.25	4.76	HNBR	SUC-1505
E08050L502	62.00	50.00	6.50	6.00	PU	PUC-760
E08044L501	63.50	44.45	10.50	9.52	PU	PUC-1339
E08044K301	63.50	44.45	10.50	9.52	HYT	PUC-1547
E080446701	63.50	44.45	10.50	9.52	FKM	SUC-1742
E08047S402	63.50	47.62	8.73	7.93	HNBR	SUC-587
E080506601	63.50	50.80	6.98	6.35	FKM	SUC-2366
E08050L501	63.50	50.80	10.50	9.52	PU	PUC-761
E080531101	63.50	53.90	5.25	4.76	NBR	SUC-1300
E080536701	63.50	53.97	5.23	4.74	FKM	SUC-2364
E080536701	63.50	53.97	5.25	4.76	FKM	SUC-2195
E080536601	63.50	53.97	5.25	4.76	FKM	SUC-1391
E08055S401	64.77	55.24	10.50	9.52	HNBR	SUC-2181
E08055L501	65.00	55.00	8.80	8.00	PU	PUC-683
E080500801	66.67	50.80	8.73	7.92	NBR	SUC-1898
E08053S401	66.67	53.97	6.98	6.35	HNBR	SUC-1813
E08038S403	69.85	38.10	17.47	15.87	HNBR	SUC-2219
E08038L502	69.85	38.10	17.47	15.87	PU	PUC-1369
E080506701	69.85	50.80	10.50	9.52	FKM	SUC-1787
E08050L503	69.85	50.80	10.50	9.52	PU	PUC-1372
E08053C301	69.85	53.97	8.73	7.93	XNBR	SUC-2346
E08057K301	69.85	57.15	6.98	6.35	HYT	PUC-1349
E08057C402	69.85	57.15	6.98	6.35	XNBR	SUC-1834
E08057C401	73.02	57.15	8.73	7.92	XNBR	SUC-1818
E080636703	73.02	63.50	5.25	4.76	FKM	SUC-2009
E080631101	73.02	63.50	5.25	4.76	NBR	SUC-2011
E08060S401	76.00	60.00	8.80	8.00	HNBR	SUD-1691
E080636702	76.20	63.50	6.98	6.35	FKM	SUD-624
E08063L501	76.20	63.50	10.50	9.52	PU	PUD-918
E08066S402	76.20	66.67	5.25	4.76	HNBR	SUD-1154
E080666701	76.20	66.67	5.25	4.76	FKM	SUD-2149
E08064L502	79.00	64.00	9.00	8.20	PU	PUD-419
E08066S401	79.37	66.67	10.50	9.52	HNBR	SUD-1129
E080696701	82.55	69.85	6.98	6.35	FKM	SUD-2130
E080697901	82.55	69.85	10.50	9.52	HYT	PUD-1054
E08071L501	82.55	71.43	6.00	5.55	PU	PUD-662
E080736701	85.72	73.02	10.50	9.52	FKM	SUD-1311
E08073C401	85.72	73.02	10.50	9.52	XNBR	SUD-1335

Part No.	D (H10)	d (f8/h9)	L (+0.2)	H	Material	Mould No.
E08069K301	88.90	69.85	10.50	9.52	HYT	PUD-931
E08069L501	88.90	69.85	10.50	9.52	PU	PUD-894
E08073L401	88.90	73.02	8.73	7.93	PU	PUD-856
E080756601	88.90	75.00	11.00	10.00	FKM	SUD-1285
E080761101	88.90	76.20	6.98	6.35	NBR	SUD-1849
E080796702	88.90	79.37	5.25	4.76	FKM	SUD-1556
E080791101	88.90	79.37	5.25	4.76	NBR	SUD-1532
E080796701	88.90	79.37	5.25	4.76	FKM	SUD-1531
E080736501	92.07	73.02	10.50	9.52	FKM	SUD-1538
E08076C401	92.07	76.20	8.73	7.92	XNBR	SUD-1376
E080766801	95.25	76.20	10.50	9.52	FKM	SUD-1780
E08082S401	95.25	82.55	10.50	9.52	HNBR	SUD-1128
E080876601	97.75	87.95	10.50	9.52	FKM	SUD-1014
E08088S403	98.42	88.90	10.50	9.52	HNBR	SUD-1131
E08088S401	101.60	88.90	6.98	6.35	HNBR	SUE-801
E08088L501	101.60	88.90	6.98	6.35	PU	PUE-444
E080886801	101.60	88.90	6.98	6.35	FKM	SUE-1127
E08088L501	101.60	88.90	6.98	6.35	PU	PUE-504
E080886802	101.60	88.90	10.50	9.52	FKM	SUE-1431
E08090S401	102.40	90.00	6.70	6.20	HNBR	SUE-1326
E080881101	104.77	88.90	8.73	7.93	NBR	SUE-1103
E08088S402	107.95	88.90	10.50	9.52	HNBR	SUE-802
E080885902	107.95	88.90	10.50	9.52	PU	PUE-592
E08098K301	107.95	98.42	5.25	4.76	HYT	PUE-516
E08092C401	111.12	92.07	10.50	9.52	XNBR	SUE-1351
E0892S401	111.12	92.07	17.47	15.87	HNBR	SUE-804
E08098D601	111.12	98.42	6.98	6.35	HNBR	SUE-635
E08098C401	111.12	98.42	6.98	6.35	XNBR	SUE-1350
E08095S401	114.30	95.25	10.50	9.52	HNBR	SUE-803
E08101R301	114.30	101.60	6.98	6.35	PU	PUG-246
E081018701	114.30	101.60	7.20	6.50	PU	PUE-594
E081116601	123.82	111.12	6.98	6.35	FKM	SUE-1244
E081146601	125.00	114.00	16.00	14.50	FKM	SUE-901
E08110D701	126.00	110.00	8.80	8.00	HNBR	SUF-907
E081076702	127.00	107.95	10.50	9.52	FKM	SUF-972
E08114R301	127.00	114.30	6.98	6.35	PU	PUG-247
E08114L501	127.00	114.30	6.98	6.35	PU	PUF-261
E081146801	127.00	114.30	10.50	9.52	FKM	SUF-988
E08112S401	131.76	112.71	17.47	15.87	HNBR	SUF-564
E08123C402	136.52	123.82	6.98	6.35	XNBR	SUF-1015
E08123S401	136.52	123.82	15.72	14.27	HNBR	SUF-569
E08120S402	139.70	120.65	10.50	9.52	HNBR	SUF-566
E08120S401	139.70	120.65	10.50	9.52	HNBR	SUF-567
E08120S403	139.70	120.65	17.47	15.87	HNBR	SUF-570
E08127R301	139.70	127.00	6.98	6.35	PU	PUG-248
E08127D601	139.70	127.00	6.98	6.35	HNBR	SUF-482
E08123C401	142.87	123.82	10.50	9.52	XNBR	SUF-957
E08129D701	143.63	129.66	15.72	14.28	HNBR	SUF-859
E08127S401	146.05	127.00	17.47	15.87	HNBR	SUF-571
E081396401	152.20	139.70	6.98	6.35	FKM	SUG-624
E08139D701	152.40	139.70	6.70	6.20	HNBR	SUG-429
E08139R301	152.40	139.70	6.98	6.35	PU	PUG-249

Bold sizes are readily available in stock.
Other materials are available on request.

E08

Single Acting Symmetrical Seal

MAX SPARE LIMITED
QUALITY. PRECISION. SPEED.

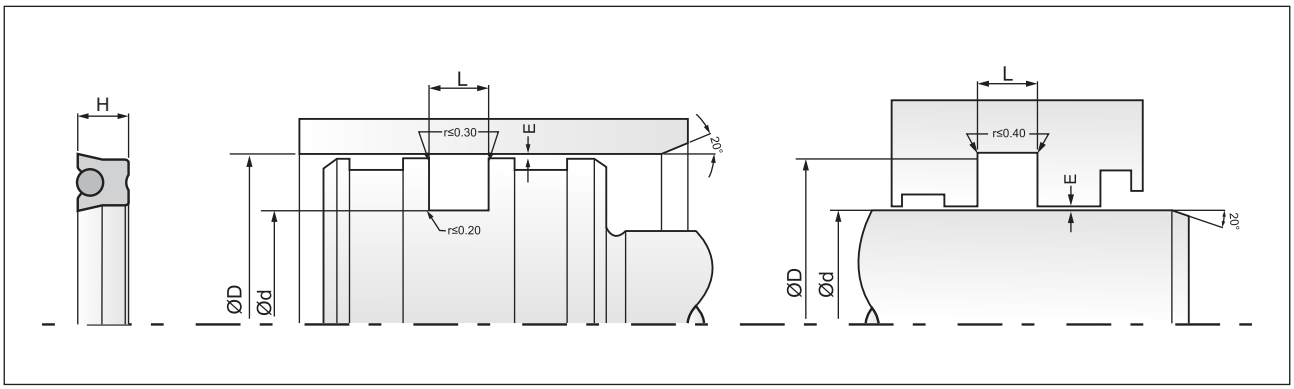

Part No.	D (H10)	d (f8/h9)	L (+0.2)	H	Material	Mould No.
E08139K301	152.40	139.70	6.98	6.35	HYT	PUG-319
E08146C402	158.75	146.05	6.98	6.35	XNBR	SUG-570
E081501101	160.00	150.00	11.00	10.00	NBR	SUG-768
E08149L501	161.92	149.22	6.98	6.35	PU	PUG-336
E08152R301	165.10	152.40	6.98	6.35	PU	PUG-244
E08152S402	168.08	152.40	17.47	15.87	HNBR	SUG-499
E081586702	168.27	158.75	5.25	4.76	FKM	SUG-662
E08152S401	171.45	152.40	10.50	9.52	HNBR	SUG-498
E08152L501	171.45	152.40	10.50	9.52	PU	PUG-460
E081586701	171.45	158.75	6.98	6.35	FKM	SUG-343
E08158D601	171.45	158.75	6.98	6.35	HNBR	SUG-427
E08158S401	177.80	158.75	17.47	15.87	HNBR	SUH-336
E08165L501	177.80	165.10	6.98	6.35	PU	PUH-317
E08165L502	177.80	165.10	10.50	9.52	PU	PUH-316
E081583501	184.15	158.75	13.97	12.70	EPDM	SUH-388
E08168L501	184.15	168.27	8.80	8.00	NBR	PUH-297
E08177D701	190.50	177.80	6.98	6.35	HNBR	SUH-392
E08177D601	190.50	177.80	6.98	6.35	HNBR	SUH-514
E08177K301	190.50	177.80	6.98	6.35	HYT	PUH-299
E081776701	190.50	177.80	6.98	6.35	FKM	SUH-485
E081846701	196.85	184.15	6.98	6.35	FKM	SUH-484
E081876601	203.20	187.35	8.80	8.00	FKM	SUJ-311
E081907901	203.20	190.50	6.98	6.35	HYT	PUJ-231
E08196L501	209.55	196.85	6.98	6.35	PU	PUJ-265
E081908701	210.00	190.00	10.50	9.50	PU	PUJ-209
E082036701	215.90	203.20	6.98	6.35	FKM	SUJ-359
E08203D701	215.90	203.20	6.98	6.35	HNBR	SUJ-473
E08203D701	215.90	203.20	6.98	6.35	HNBR	SUJ-341
E08203L401	222.25	203.20	10.50	9.52	PU	PUJ-218
E082036601	222.25	203.20	17.47	15.80	FKM	SUJ-284
E08215K301	234.95	215.90	10.50	9.52	HYT	PPA-2124
E08222D601	234.95	222.25	6.98	6.35	HNBR	SUK-326

Part No.	D (H10)	d (f8/h9)	L (+0.2)	H	Material	Mould No.
E08214L501	240.00	214.00	21.50	19.55	PU	PUK-131
E08228C401	241.30	228.60	6.98	6.35	XNBR	SUK-281
E08228L501	247.65	228.60	13.97	12.70	PU	PUK-133
E082401101	252.47	240.03	6.98	6.35	NBR	SUM-518
E082386701	254.00	238.12	8.73	7.92	FKM	SUM-649
E08250CG01	266.70	250.82	8.73	7.93	PU	PUM-326
E08260L502	273.05	260.35	6.98	6.35	PU	PUM-298
E082541001	279.40	254.00	21.00	19.10	NBR	SUM-392
E08260L501	279.40	260.35	10.50	9.52	PU	PUM-287
E08266L501	279.40	266.70	6.98	6.35	PU	PUM-259
E082308401	280.00	230.00	27.00	25.00	NBR	SUM-832
E08279L501	304.80	279.40	24.00	22.22	PU	PUM-405
E08286L501	305.00	286.00	11.50	10.50	PU	PUM-178
E083151101	328.47	315.69	6.98	6.35	NBR	SUM-517
E08304L501	330.00	304.00	21.00	20.00	PU	PUM-170
E08355L501	374.65	355.60	10.50	9.52	PU	PUM-223
E083806501	410.00	380.00	16.00	15.10	FKM	SUVG-455
E08457L502	457.53	432.13	15,5	14.09	PU	PUM-329
E08440L501	466.90	440.96	15.72	14.28	PU	PUM-217
E084611101	480.39	461.69	11.00	9.90	NBR	SUVG-470
E08457L501	482.60	457.20	13.97	12.70	PU	PUM-222
E084691101	482.60	469.90	6.98	6.35	NBR	SUVG-472
E084828701	508.00	482.60	13.97	12.70	PU	PUM-382
E08533CG01	558.80	533.40	13.97	12.70	PU	PUM-322
E085406501	580.00	540.00	21.50	19.50	FKM	SUVG-454
E08558L401	584.20	558.80	13.97	12.70	PU	PUM-270
E086061101	619.04	606.29	6.98	6.35	NBR	SUVG-469
E08609L401	641.35	609.60	17.47	15.87	PU	PUM-292
E08666CF01	685.80	666.75	10.50	9.52	PU	PUM-324
E089201101	939.67	920.54	11.00	9.90	NBR	SUVG-471
E08914CG01	939.80	914.40	13.97	12.70	PU	PUM-403

Bold sizes are readily available in stock.
Other materials are available on request.

E09

Single Acting Symmetrical Seal

DETAILS

E09 seals are rectangular cross-sectional loaded U cups for use in either rod or piston applications. The added length improves the stability in high stroke, high-pressure applications. It is a conventional lip seal to produce a unique sealing in a vacuum, low and high-pressure applications. At zero or low pressure, the O-ring helps to increase the sealing force preventing any bypass. Under most conditions as the pressure rises, the sealing force increases and the O-ring ensures complete lip actuation. The symmetry of this seal is suited for single-acting rod and piston applications. E09 should not be installed back to back in bi-directional piston applications, as a pressure trap between the seals may occur.

COMPATIBILITY

Mineral oils, bio oils, water soluble & water glycol fluids

MATERIAL

U seal : Polyurethane 92 Shore A
O Ring : Nitrile Rubber 70/75 Shore A

APPLICATION

- Medium duty hydraulic cylinders, holding platforms.
- Suitable for double acting cylinders.
- Can also be used as a Rod Seal in conjunction with S15 style Rod Seal for heavy applications.
- Can also be used in equivalent to S19 Rod Seal.

OPERATING CONDITIONS

Temperature Range : -30°C to + 100°C
Pressure : 350 Bar
Speed : 0.5 m/s

FEATURES

- Excellent sealability during low & high pressure.
- Long service life.
- Easily retrofits other seals.
- Precision trimmed sealing lips.
- Easy to install.

SURFACE ROUGHNESS

Static : 1.6 µmRa
Dynamic : 0.4 µmRa

INSTALLATION & ASSEMBLY

Careful fitting is the prerequisite for the correct functioning of the seal. Recommended to use Maxspare Seal Twistor for easy installation. The seal must be properly lubricated before installation.

PERMISSIBLE EXTRUSION GAP	E max (mm)
150 Bar	0.60
250 Bar	0.50
350 Bar	0.40

E09

Single Acting Symmetrical Seal

MAX SPARE LIMITED
QUALITY. PRECISION. SPEED.

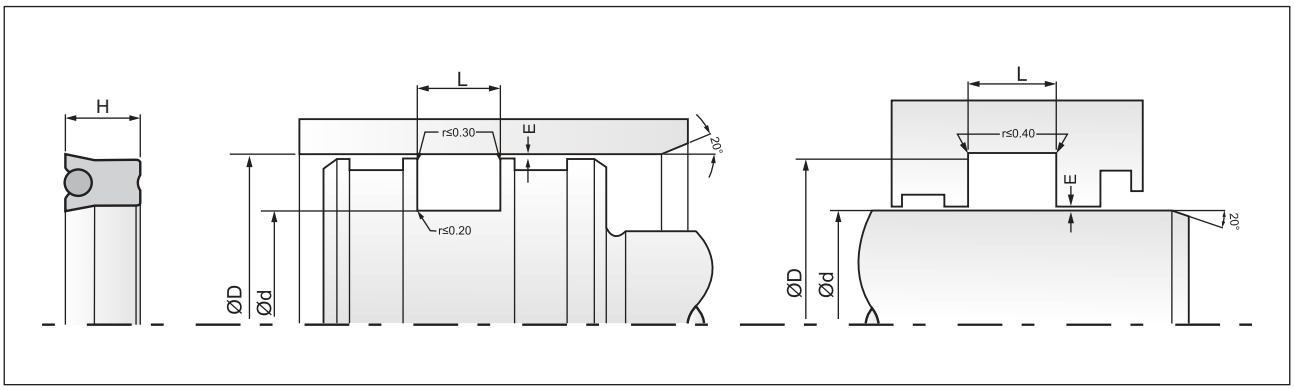

Part No.	D (H10)	d (f8/h9)	L (+0.2)	H	Material	Mould No.
E090066601	12.70	6.35	3.50	3.17	FKM	SUA-1097
E090061001	12.70	6.35	6.98	6.35	NBR	SUA-1427
E09006L501	13.00	6.00	7.00	6.60	PU	PUA-266
E090076701	14.28	7.93	3.50	3.17	FKM	SUA-1150
E090091101	15.87	9.52	3.50	3.17	NBR	SUA-2092
E090116701	17.45	11.10	3.50	3.17	FKM	SUA-2094
E09011L501	17.46	11.11	6.98	6.35	PU	PUA-706
E090111102	17.50	11.00	4.50	3.50	NBR	SUA-2097
E09012L501	18.00	12.50	4.65	3.65	PU	PUA-931
E09012L502	19.05	12.70	3.50	3.17	PU	PUA-942
E09011L501	20.62	11.10	5.25	4.75	PU	PUA-846
E090126601	22.22	12.70	5.73	5.23	FKM	SUA-2281
E09015O501	25.40	15.87	5.73	5.23	HYTREL	PUB-1773
E090196701	25.40	19.05	3.50	3.17	FKM	SUB-3514
E090196801	25.40	19.05	6.98	6.35	FKM	SUB-3728
E090111101	26.40	11.90	8.68	7.95	NBR	SUB-2133
E09019O501	28.57	19.05	5.73	5.23	HYTREL	PUB-1774
E090226601	28.57	22.22	3.50	3.17	FKM	SUB-1975
E090226601	28.57	22.22	3.50	3.17	FKM	SUB-2258
E09022L501	31.75	22.22	5.73	5.23	PU	PUB-1718
E09022O501	31.75	22.22	5.73	5.23	HYTREL	PUB-1760
E09025O501	34.92	25.40	5.73	5.23	HYTREL	PUB-1775
E090256701	34.92	25.40	8.68	7.92	FKM	SUB-3955
E09028L501	34.93	28.57	6.98	6.35	PU	PUB-611
E090306801	36.50	30.16	4,.3	3.30	FKM	SUB-3906
E09017D701	36.57	17.47	19.30	17.60	HNBR	SUB-3461
E09028O501	38.10	28.57	5.73	5.23	HYTREL	PUB-1779
E09028K301	41.27	28.57	10.52	9.52	HYTREL	PUB-2122
E09031O501	41.27	31.75	5.73	5.23	HYTREL	PUB-1776
E090316701	41.27	31.75	8.68	7.92	FKM	SUB-4150
E09031L501	41.27	31.75	8.68	7.94	PU	PUB-1946
E090346701	41.27	34.92	6.98	6.35	FKM	SUB-4211
E090321101	42.00	32.00	8.50	8.00	NBR	SUB-3793
E09031D702	42.06	31.75	10.50	9.50	HNBR	SUB-1662
E09034O501	44.45	34.92	5.73	5.23	HYTREL	PUB-1778
E09031D701	47.49	31.75	10.52	9.52	HNBR	SUB-1629
E09038D702	47.49	38.10	10.00	9.10	HNBR	SUB-1663
E09038D701	47.49	38.10	10.52	9.52	HNBR	SUB-1628
E09038O501	47.62	38.10	5.73	5.23	HYTREL	PUB-1777
E090381101	48.00	38.00	7.00	6.50	NBR	SUB-1690
E090401101	50.00	40.00	8.30	7.30	NBR	SUB-1968
E090401102	50.00	40.00	11.00	10.00	NBR	SUB-3738
E090381102	50.80	38.10	6.98	6.35	NBR	SUC-1292
E09038C401	50.80	38.10	6.98	6.35	XNBR	SUC-2818
E09041C401	50.80	41.27	5.25	4.76	XNBR	SUC-2817
E090416601	50.80	41.27	5.73	5.23	FKM	SUC-2531
E090411001	50.80	41.28	10.52	9.52	NBR	SUC-2591
E09044O501	53.97	44.45	5.73	5.23	HYTREL	PUC-1249
E090447601	53.97	44.45	10.52	9.52	AFLAS	SUC-2649
E090501101	60.30	50.80	5.25	4.75	NBR	SUC-2465
E09050O501	60.32	50.80	5.73	5.23	HYTREL	PUC-1330
E09053K301	60.32	53.97	6.98	6.35	HYTREL	PUC-1315

Part No.	D (H10)	d (f8/h9)	L (+0.2)	H	Material	Mould No.
E090501001	62.00	50.00	12.00	11.00	NBR	SUC-1394
E09050L501	63.50	50.80	10.52	9.52	PU	PUC-427
E090501102	64.00	50.00	10.50	9.50	NBR	SUC-2621
E090511101	64.00	51.00	6.80	6.30	NBR	SUC-2620
E09054L501	64.00	54.00	5.50	5.00	PU	PUC-927
E090506701	66.67	50.80	8.68	7.92	FKM	SUC-2445
E09057O501	66.67	57.15	5.73	5.23	HYTREL	PUC-1333
E09050L502	66.68	50.80	8.50	8.00	PU	PUC-559
E090505901	69.85	50.80	17.47	15.87	PU	PUC-1047
E090507901	69.85	50.80	17.47	15.87	HYTREL	PUC-1048
E090505902	70.00	50.00	11.00	10.00	PU	PUC-1285
E090606702	70.00	60.00	9.10	8.10	FKM	SUC-1608
E090606702	70.00	60.00	9.10	8.10	FKM	SUC-1388
E090573501	76.20	57.15	17.47	15.87	EPDM	SUD-1327
E09068L501	78.00	68.00	6.80	6.30	PU	PUD-489
E09066C401	79.37	66.67	10.52	9.52	XNBR	SUD-2012
E090697601	82.55	69.85	10.52	9.52	AFLAS	SUD-2038
E090663501	85.72	66.67	17.47	15.87	EPDM	SUD-1328
E090768701	85.72	76.20	7.00	6.50	PU	PUD-1155
E09082C401	95.25	82.55	10.52	9.52	XNBR	SUD-1961
E09082K301	98.39	82.55	8.68	7.92	HYTREL	PUD-1091
E090886703	101.60	88.90	10.52	9.52	FKM	SUE-1433
E09088D701	101.60	88.90	10.52	9.52	HNBR	SUE-1323
E090881001	101.60	88.90	11.00	10.00	NBR	SUE-1332
E09092L501	101.60	92.07	10.52	9.52	PU	PUE-684
E09092C401	104.77	92.07	10.52	9.52	XNBR	SUE-1349
E090956702	107.95	95.25	10.52	9.52	FKM	SUE-1429
E090956701	111.12	95.25	10.52	9.52	FKM	SUE-1365
E09098S401	114.30	98.42	8.45	7.69	HNBR	SUE-1417
E091060901	120.00	106.00	9.50	8.50	NBR	SUE-1379
E09101AG01	120.65	101.60	15.27	14.27	FKM	SUE-1056
E091141001	127.00	114.30	6.98	6.35	NBR	SUF-518
E09114C401	127.00	114.30	6.98	6.35	XNBR	SUF-552
E09114C402	127.00	114.30	10.52	9.52	XNBR	SUF-553
E09127D601	139.70	127.00	10.52	9.52	HNBR	SUF-652
E09127K301	139.70	127.00	15.27	14.27	HYTREL	PUF-561
E09123S401	142.87	123.82	10.52	9.52	HNBR	SUF-998
E091391001	152.40	139.70	10.52	9.52	NBR	SUG-815
E09139D701	152.40	139.70	15.27	14.27	HNBR	SUG-806
E09149D601	158.72	149.22	10.52	9.52	HNBR	SUG-780
E091461001	158.75	146.05	6.98	6.35	NBR	SUG-463
E09146L501	158.75	146.05	10.52	9.52	PU	PUG-459
E09146C401	158.75	146.05	15.27	14.27	XNBR	SUG-488
E091461002	158.75	146.05	15.30	14.30	NBR	SUG-464
E091496701	161.92	149.22	15.28	14.28	FKM	SUG-868
E09152C301	177.80	152.40	20.95	19.05	XNBR	SUH-533
E091583501	177.80	158.75	13.70	12.70	EPDM	SUH-381
E09165D601	177.80	165.10	13.70	12.70	HNBR	SUH-482
E091651001	177.80	165.10	15.00	14.00	NBR	SUH-504
E091583502	184.15	158.75	13.70	12.70	EPDM	SUH-397
E09171L502	184.15	171.45	10.52	9.52	PU	PUH-259
E091776701	203.20	177.80	13.70	12.70	FKM	SUJ-442

Bold sizes are readily available in stock.
Other materials are available on request.

E09

Single Acting Symmetrical Seal

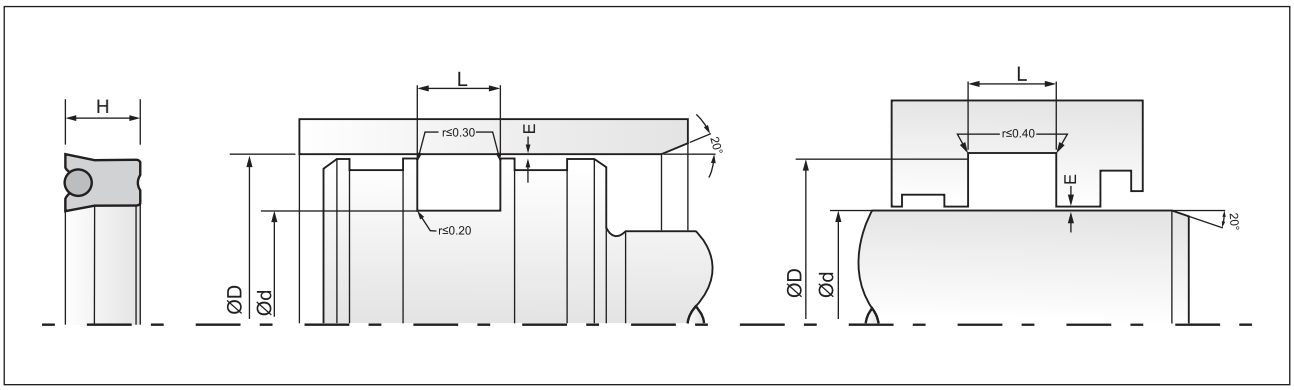

Part No.	D (H10)	d (f8/h9)	L (+0.2)	H	Material	Mould No.
E091841001	203.20	184.15	17.47	15.87	NBR	SUJ-274
E09184C401	203.20	184.15	17.47	15.87	XNBR	SUJ-283
E09203L501	215.90	203.20	10.00	9.00	PU	PUJ-166
E09203L502	215.90	203.20	16.30	15.30	PU	PUJ-167
E092253401	250.00	225.00	15.50	14.50	EPDM	SUK-158
E092281101	254.00	228.60	13.70	12.70	NBR	SUM-418
E092286701	254.00	228.60	13.70	12.70	FKM	SUM-669
E09228L501	254.00	228.60	20.95	19.05	PU	PUM-317
E092361101	254.00	236.53	10.52	9.52	NBR	SUM-353
E09238L501	254.00	238.12	8.68	7.92	PU	PUM-346
E092386701	254.00	238.12	8.68	7.92	FKM	SUM-778
E092411001	254.00	241.30	10.00	9.00	NBR	SUM-812

Part No.	D (H10)	d (f8/h9)	L (+0.2)	H	Material	Mould No.
E09254L501	266.70	254.00	10.00	9.00	PU	PUM-189
E09254L502	266.70	254.00	16.30	15.30	PU	PUM-190
E09260L502	273.05	260.35	6.98	6.35	PU	PUM-272
E09260L501	279.40	260.35	17.47	15.87	PU	PUM-374
E09279C401	304.80	279.40	20.95	19.05	XNBR	SUM-842
E092856701	304.80	285.75	17.47	15.87	FKM	SUM-799
E092851001	304.80	285.76	15.00	14.00	NBR	SUM-811
E09304L501	317.50	304.80	10.00	9.00	PU	PUM-191
E09304L502	323.85	304.80	16.30	15.30	PU	PUM-192
E093176701	355.60	317.50	22.00	21.00	FKM	SUM-434
E09520L501	561.97	520.70	20.95	19.05	PU	PUM-262
E09590R301	609.60	590.55	17.47	15.87	PU	PUM-255

Bold sizes are readily available in stock.
Other materials are available on request.

E10

Single Acting Symmetrical Seal

DETAILS

E10 seals add a back-bevel lip to the E09 and are used in both rod or piston applications. The rectangular shape of its cross-section ensures stability in the gland and the added length improves the stability in high stroke, high-pressure applications. It is a conventional lip seal to produce a unique sealing in a vacuum, low and high-pressure applications. At zero or low pressure, the O-ring helps to increase the sealing force preventing any bypass. Under most conditions as the pressure rises, the sealing force increases and the O-ring ensures complete lip actuation. The symmetry of this seal is suited for single-acting rod and piston applications. E10 should not be installed back to back in bi-directional piston applications as a pressure trap between the seals may occur.

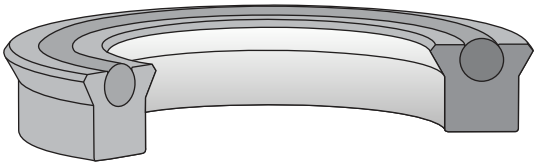

COMPATIBILITY

Mineral oils, bio oils, water soluble & water glycol fluids.

MATERIAL

U seal : Polyurethane 92 Shore A
O-Ring : Nitrile Rubber 70/75 Shore A

APPLICATION

- Medium duty hydraulic cylinders, holding platforms.
- Suitable for double acting cylinders.
- Can also be used as a Rod Seal in conjunction with S15 style Rod Seal for heavy applications.
- Can also be used in equivalent to S19 Rod Seal.

OPERATING CONDITIONS

Temperature Range : -30°C to + 100°C
Pressure : 350 Bar
Speed : 0.5 m/s

FEATURES

- Excellent sealability during low & high pressure.
- Long service life.
- Easily retrofits other seals.

SURFACE ROUGHNESS

Static : 1.6 µmRa
Dynamic : 0.4 µmRa

INSTALLATION & ASSEMBLY

E10 U seals are easily assembled into closed groove. Carefull fitting is a prerequisite for the correct functioning of the seal. Recommended to use Maxspare Seal Twistor for easy installation. The seal must be properly lubricated before installation.

PERMISSIBLE EXTRUSION GAP	E max (mm)
50 Bar	0.60
100 Bar	0.50
200 Bar	0.40

E10

Single Acting Symmetrical Seal

MAX SPARE LIMITED
QUALITY. PRECISION. SPEED.

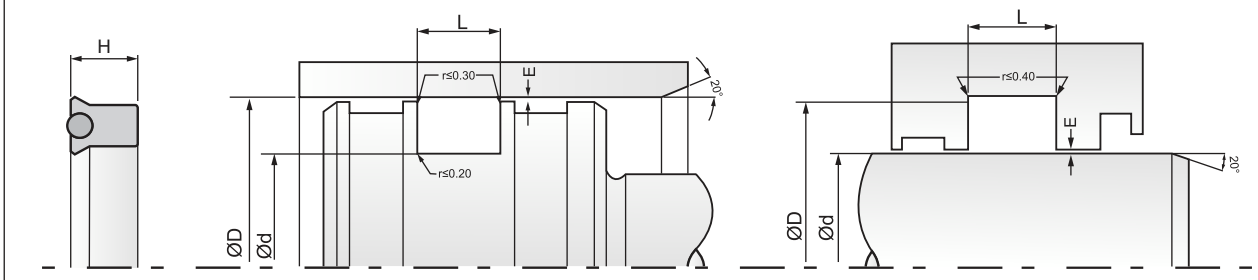

Part No.	D (H10)	d (f8/h9)	L (+0.2)	H	Material	Mould No.
E100031101	8.50	3.00	4.50	4.00	NBR	SUA-1948
E10003L501	10.00	3.80	5.50	5.00	PU	PUA-597
E10005L501	10.00	5.50	7.62	7.00	PU	PUA-469
E10005L501	10.00	5.50	7.62	7.00	PU	PUA-496
E10004L501	11.10	4.76	7.30	6.60	PU	PUA-900
E100061104	11.11	6.35	3.50	3.17	NBR	SUA-1023
E100054501	12.00	5.00	5.50	5.00	VMQ	SUA-2286
E10008L501	12.50	8.00	3.30	3.00	PU	PUA-626
E100086603	12.50	8.00	3.63	3.50	NBR	PUA-627
E100061103	12.60	6.20	7.20	6.50	NBR	SUA-846
E10006D701	12.70	6.35	2.71	2.41	HNBR	SUA-2181
E100061105	12.70	6.35	3.50	3.17	NBR	SUA-1024
E100066701	12.70	6.35	3.50	3.17	FKM	SUA-1590
E100066601	12.70	6.35	3.63	3.50	FKM	SUA-629
E10006L503	12.70	6.35	7.20	6.50	PU	PUA-580
E100071101	12.70	7.93	3.50	3.17	NBR	SUA-2187
E100066501	13.00	6.00	3.63	3.30	FKM	SUA-1599
E10007L503	13.00	7.00	5.50	5.00	PU	PUA-747
E10007L502	13.00	7.00	6.50	6.00	PU	PUA-746
E100086601	14.00	8.00	3.30	3.00	FKM	SUA-816
E10008L401	14.00	8.00	4.50	4.00	PU	PUA-962
E100086602	14.00	8.00	7.30	6.70	FKM	SUA-1687
E10007L501	14.27	7.92	3.50	3.17	PU	PUA-718
E100108701	15.00	10.00	3.30	3.00	PU	PUA-622
E10006L501	15.87	6.35	5.25	4.76	PU	PUA-271
E10009L507	15.87	9.25	2.68	2.38	PU	PUA-912
E10009L504	15.87	9.52	3.50	3.17	PU	PUA-685
E10009L501	15.87	9.52	3.50	3.17	PU	PUA-382
E10009L505	15.87	9.52	3.63	3.30	PU	PUA-753
E10009L502	16.00	9.00	3.30	3.00	PU	PUA-581
E100090801	16.00	9.00	3.63	3.50	NBR	SUA-2428
E10011L501	17.00	11.00	7.20	6.50	PU	PUA-636
E100111102	17.46	11.11	2.68	2.38	NBR	SUA-1025
E10011L502	17.46	11.11	2.68	2.38	PU	PUA-837
E100111101	17.46	11.11	3.50	3.17	NBR	SUA-448
E100096501	17.85	9.92	3.27	2.94	FKM	SUA-2399
E100101001	18.00	10.00	4.50	4.00	NBR	SUA-2222
E10012L503	18.00	12.00	6.50	6.00	PU	PUA-830
E10004L502	18.91	4.81	10.00	9.00	PU	PUA-927
E10009AI01	19.00	9.00	5.50	5.00	VMQ	SUA-1742
E100091102	19.00	9.00	6.50	6.00	NBR	SUA-1100
E10009L503	19.00	9.00	8.00	7.50	PU	PUA-583
E10010L503	19.00	10.00	7.20	6.50	PU	PUA-892
E100096801	19.05	9.52	8.73	7.93	FKM	SUA-1710
E10009L506	19.05	9.53	5.25	4.78	PU	PUA-797
E10012S401	19.05	12.70	3.50	3.17	HNBR	SUA-198
E10012L504	19.05	12.70	3.50	3.17	PU	PUA-941
E100126701	19.05	12.70	6.98	6.35	FKM	SUA-1069
E100126702	19.05	12.70	7.62	6.98	FKM	SUA-1510
E100085901	20.00	8.00	9.00	8.00	PU	PUA-889
E100128401	20.00	12.00	6.00	5.50	NBR/FABRIC	SUA-2427
E100121001	20.00	12.00	6.30	5.70	NBR	SUA-2401

Part No.	D (H10)	d (f8/h9)	L (+0.2)	H	Material	Mould No.
E10012L502	20.00	12.60	6.30	5.80	PU	PUA-696
E10014L501	20.00	14.00	4.10	3.78	PU	PUA-307
E10014L504	20.00	14.00	4.50	4.00	PU	PUA-582
E10014L506	20.64	14.29	3.50	3.18	PU	PUA-798
E10014L503	21.00	14.00	4.00	3.80	PU	PUA-375
E100140801	21.43	14.28	3.50	3.17	NBR	PUA-645
E10013L501	22.00	13.00	7.20	6.50	PU	PUA-893
E10014L507	22.00	14.00	6.50	6.00	PU	PUA-829
E10015L401	22.00	15.00	6.50	6.00	PU	PUA-690
E10016L501	22.00	16.00	7.20	6.50	PU	PUA-376
E100126401	22.22	12.70	10.50	9.50	FKM	SUA-2418
E100151103	22.22	15.87	3.50	3.17	NBR	SUA-1140
E100156701	22.23	15.88	3.50	3.17	FKM	SUA-2318
E10015L505	22.23	15.88	5.25	4.76	PU	PUA-799
E10015L402	22.23	15.88	5.25	4.76	PU	PUA-727
E100111001	23.00	11.00	3.30	3.00	NBR	SUA-983
E10017L501	23.81	17.46	3.50	3.17	PU	PUA-634
E10016L502	24.00	16.00	6.30	5.70	PU	PUA-403
E10015L502	25.00	15.00	7.62	7.00	PU	PUA-468
E10015L503	25.40	15.00	7.62	7.00	PU	PUB-1055
E10015L506	25.40	15.88	5.25	4.76	PU	PUB-1663
E10015L507	25.40	15.88	6.98	6.35	PU	PUB-1664
E10019L506	25.40	19.05	5.25	4.76	PU	PUB-1665
E10019L503	25.40	19.05	6.98	6.35	PU	PUB-1108
E10018D601	25.91	18.53	6.98	6.35	HNBR	SUB-2071
E100141105	26.00	14.00	5.50	5.00	NBR	SUB-4047
E100145904	26.00	14.00	12.00	11.00	PU	PUB-1800
E100166701	26.00	15.00	7.62	7.10	FKM	SUB-3204
E100166601	26.00	16.00	6.50	6.00	FKM	SUB-2047
E10018L401	26.00	18.00	5.50	5.00	PU	PUB-933
E10018L502	26.00	18.00	6.30	5.70	PU	PUB-1153
E100206701	26.00	20.00	3.30	3.00	FKM	SUB-3193
E10020L402	26.00	20.00	6.50	6.00	PU	PUB-1478
E10020L505	26.99	20.64	3.50	3.18	PU	PUB-1668
E10022L404	27.50	22.00	6.50	6.00	PU	PUB-1585
E10016L503	28.00	16.00	6.50	6.00	PU	PUB-1361
E10016L504	28.00	16.00	11.00	10.00	PU	PUB-1362
E100186701	28.00	18.20	6.50	6.10	FKM	SUB-3205
E10020850	28.00	20.00	5.29	4.80	FKM/FABRIC	SUB-2843
E10020L502	28.00	20.00	6.30	5.70	PU	PUB-813
E100201001	28.00	20.00	6.30	5.70	NBR	SUB-4016
E100200601	28.00	20.00	6.50	6.00	NBR	SUB-3280
E100224301	28.00	22.00	6.30	5.80	UHMPWE	PUB-1975
E10022L403	28.00	22.00	6.50	6.00	PU	PUB-1281
E10019L502	28.57	19.05	5.25	4.75	PU	PUB-1090
E100196701	28.57	19.05	7.62	6.98	FKM	SUB-2501
E100226703	28.57	22.22	3.50	3.17	FKM	SUB-2902
E10022L502	28.57	22.22	3.50	3.17	PU	PUB-965
E10022L508	28.57	22.22	6.98	6.35	PU	PUB-1980
E100150801	28.97	15.87	8.73	7.93	PU	PUB-1360
E100221102	28.97	22.22	4.46	3.96	NBR	SUB-1882
E100183502	30.00	18.00	9.00	8.00	EPDM	SUB-1558

Bold sizes are readily available in stock.
Other materials are available on request.

E10

Single Acting Symmetrical Seal

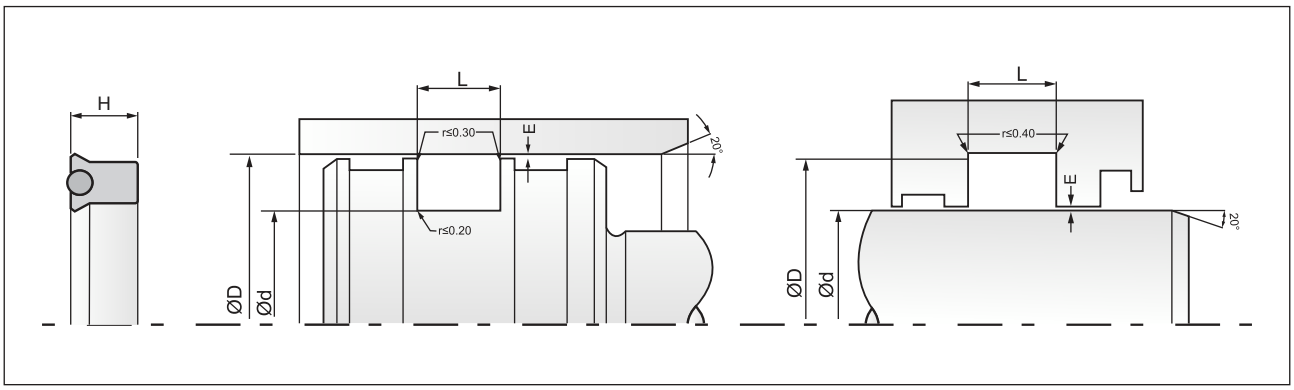

Part No.	D (H10)	d (f8/h9)	L (+0.2)	H	Material	Mould No.
E10019AI01	30.00	19.00	7.20	6.50	VMQ	SUB-2875
E10020L504	30.00	20.00	6.50	6.00	PU	PUB-1339
E10020L507	30.00	20.00	6.50	6.00	PU	PUB-2018
E10020L501	30.00	20.00	7.62	7.00	PU	PUB-276
E10020L503	30.00	20.00	8.00	7.30	PU	PUB-1155
E10020L508	30.00	20.00	9.00	8.00	PU	PUB-2019
E10022L504	30.00	22.00	5.50	5.00	PU	PUB-1349
E100226802	30.00	22.00	5.50	5.00	FKM	SUB-1664
E10022L505	30.00	22.00	5.50	5.00	PU	PUB-2020
E10022L501	30.00	22.00	6.30	5.70	PU	PUB-587
E10022L506	30.00	22.00	6.50	6.00	PU	PUB-2022
E10022L507	30.00	22.00	9.00	8.00	PU	PUB-2005
E10024L401	30.00	24.00	6.50	6.00	PU	PUB-1473
E100236701	30.14	23.79	7.62	6.98	FKM	SUB-3515
E10023S401	30.16	23.81	6.98	6.35	HNBR	SUB-3074
E10019L507	31.75	19.05	6.98	6.35	PU	PUB-1666
E10019L501	31.75	19.05	10.50	9.52	PU	PUB-966
E10019L508	31.75	19.05	10.50	9.53	PU	PUB-1667
E10025L510	31.75	25.40	3.50	3.17	PU	PUB-1579
E100256704	31.75	25.40	3.50	3.17	FKM	SUB-4186
E10025L506	31.75	25.40	5.25	4.76	PU	PUB-1120
E10025L506	31.75	25.40	5.25	4.76	PU	PUB-1069
E10025D701	31.75	25.40	6.98	6.35	HNBR	SUB-611
E10024C401	31.75	25.40	6.98	6.35	XNBR	SUB-3786
E10025L511	31.75	25.40	6.98	6.35	PU	PUB-1670
E100183501	32.00	18.00	11.00	10.00	EPDM	SUB-1502
E100221103	32.00	22.00	7.20	6.50	NBR	SUB-3377
E100226601	32.00	22.00	8.00	7.30	FKM	SUB-2830
E100246601	32.00	24.00	5.50	5.00	FKM	SUB-3745
E100268701	32.00	26.00	5.00	4.60	PU	PUB-201
E10025L516	33.00	25.00	5.50	5.00	PU	PUB-2006
E10025L503	33.00	25.00	6.30	5.70	PU	PUB-812
E10025L515	33.00	25.00	6.50	6.00	NBR	PUB-1922
E100256603	33.00	25.00	6.98	6.30	FKM	SUB-4167
E10025L523	33.00	25.00	7.62	7.00	PU	PUB-2108
E10025L517	33.00	25.00	8.00	7.30	PU	PUB-1990
E10026D701	33.32	26.97	3.50	3.17	HNBR	SUB-3618
E100266801	33.32	26.97	3.50	3.17	FKM	SUB-3655
E10025L512	33.34	25.40	6.50	5.94	PU	PUB-1671
E10025L513	33.34	25.40	6.98	6.35	PU	PUB-1672
E10022L401	34.00	22.00	10.00	9.00	PU	PUB-559
E100224501	34.92	22.22	7.62	6.98	VMQ	SUB-2282
E10022L503	34.92	22.22	10.50	9.52	PU	PUB-968
E100251103	34.92	25.40	4.70	4.36	NBR	SUB-3108
E100256704	34.92	25.40	5.24	4.74	FKM	SUB-3346
E100250801	34.92	25.40	7.70	7.20	PU	PUB-1081
E10028S403	34.92	28.57	3.50	3.17	HNBR	SUB-4213
E10028L501	34.92	28.57	3.50	3.17	PU	PUB-967
E10025L514	34.93	25.40	8.73	7.94	PU	PUB-1673
E10020L401	35.00	20.00	12.00	11.00	PU	PUB-560
E10025L518	35.00	25.00	6.50	6.00	PU	PUB-1991
E10025L402	35.00	25.00	6.50	6.00	PU	PUB-1235

Part No.	D (H10)	d (f8/h9)	L (+0.2)	H	Material	Mould No.
E10025L502	35.00	25.00	7.62	7.00	PU	PUB-1077
E10025L504	35.00	25.00	7.62	7.00	PU	PUB-1143
E10025L508	35.00	25.00	8.00	7.30	PU	PUB-1151
E10025L519	35.00	25.00	8.00	7.30	PU	PUB-1992
E100251001	35.00	25.00	8.40	7.80	NBR	SUB-4175
E10025L520	35.00	25.00	9.00	8.00	PU	PUB-1993
E100256602	35.00	25.40	5.00	4.50	FKM	SUB-1460
E100266601	35.00	26.00	9.00	8.00	FKM	SUB-2551
E10028S801	35.00	28.00	6.50	6.00	PU	PUB-1318
E100286601	35.50	28.00	5.50	5.00	FKM	SUB-1391
E100286801	35.50	28.00	7.20	6.50	FKM	SUB-3652
E100286801	35.50	28.00	7.20	6.50	FKM	SUB-3652
E10025L501	36.00	25.00	4.69	4.20	PU	PUB-583
E100286702	36.00	28.00	5.50	5.00	FKM	SUB-3866
E10028L506	36.00	28.00	6.00	5.40	PU	PUB-1544
E10028L401	36.00	28.00	6.30	5.70	PU	PUB-260
E10028L505	36.00	28.00	6.30	5.70	PU	PUB-1152
E10026L502	36.51	26.99	8.73	7.94	PU	PUB-2017
E100306702	36.51	30.16	6.98	6.35	FKM/FABRIC	SUB-3555
E10025L509	38.00	25.20	11.00	10.00	PU	PUB-1521
E100281102	38.00	28.00	7.20	6.50	NBR	SUB-3378
E10028L510	38.00	28.00	8.00	7.30	PU	PUB-1994
E100306703	38.00	30.00	6.50	6.00	FKM	SUB-3747
E10030L506	38.00	30.00	6.50	6.00	PU	PUB-1995
E100301001	38.00	30.00	6.98	6.30	NBR	SUB-1711
E10030L507	38.00	30.00	9.00	8.00	PU	PUB-1996
E10031L505	38.00	31.80	5.00	4.50	PU	PUB-1566
E10022S401	38.10	22.23	10.50	9.53	HNBR	SUB-2975
E100254501	38.10	25.40	7.62	6.98	VMQ	SUB-2283
E100256703	38.10	25.40	7.62	6.98	FKM	SUB-2502
E100256705	38.10	25.40	7.62	6.99	FKM	SUB-3502
E10025C401	38.10	25.40	10.50	9.52	XNBR	SUB-3059
E10025L507	38.10	25.40	10.50	9.52	PU	PUB-1076
E10028C401	38.10	28.57	8.73	7.93	XNBR	SUB-3785
E100281102.	38.10	28.58	8.73	7.92	NBR	SUB-3859
E10028L508	38.10	28.58	8.73	7.94	PU	PUB-1677
E100311101	38.10	31.75	3.50	3.17	NBR	SUB-3624
E10031L503	38.10	31.75	3.50	3.17	PU	PUB-1031
E10031S402	38.10	31.75	3.50	3.17	HNBR	SUB-2607
E10031L507	38.10	31.75	6.98	6.35	PU	PUB-1676
E10031S403	38.10	31.75	6.98	6.35	HNBR	SUB-3073
E10031S403	38.10	31.75	7.30	6.70	HNBR	SUB-4006
E100261103	39.00	26.00	7.62	7.00	NBR	SUB-2420
E10020L506	39.69	20.64	10.50	9.53	PU	PUB-1669
E10030L511	39.69	30.16	5.25	4.76	PU	PUB-2007
E10030L513	39.69	30.16	6.98	6.35	PU	PUB-2021
E10030L512	39.69	30.16	8.73	7.94	PU	PUB-1989
E10033L501	39.69	33.34	3.50	3.18	PU	PUB-1683
E10033L502	39.69	33.34	4.47	3.97	PU	PUB-1682
E100255906	40.00	25.00	11.00	10.00	PU	PUB-857
E10025L401	40.00	25.00	12.00	11.00	PU	PUB-558
E10028L509	40.00	28.00	9.00	8.00	PU	PUB-1967

Bold sizes are readily available in stock.
Other materials are available on request.

E10

Single Acting Symmetrical Seal

MAX SPARE LIMITED
QUALITY. PRECISION. SPEED.

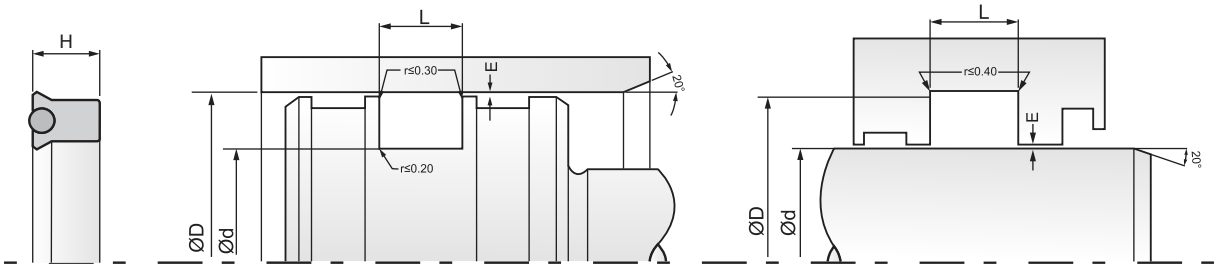

Part No.	D (H10)	d (f8/h9)	L (+0.2)	H	Material	Mould No.
E100291001	40.00	29.00	11.00	10.00	NBR	SUB-1359
E10030L508	40.00	30.00	6.50	6.00	PU	PUB-1997
E10030L502	40.00	30.00	7.62	7.00	PU	PUB-1078
E10030L502	40.00	30.00	7.62	7.00	PU	PUB-367
E10030L509	40.00	30.00	8.00	7.30	PU	PUB-1998
E10030L510	40.00	30.00	9.00	8.00	PU	PUB-1981
E100306704	40.00	30.00	9.00	8.00	FKM	SUB-4192
E10030L505	40.00	30.00	11.00	10.00	PU	PUB-1959
E010301008	40.00	30.00	11.00	10.00	NBR	SUB-3879
E100321101	40.00	32.00	4.50	4.00	NBR/FABRIC	SUB-3006
E10032L503	40.00	32.00	6.50	6.00	PU	PUB-1982
E10032L504	40.00	32.00	7.62	7.00	PU	PUB-1983
E10032L505	40.00	32.00	9.00	8.00	PU	PUB-1984
E10030L501	40.50	30.00	8.40	7.70	PU	PUB-488
E100354501	41.00	35.00	4.50	4.00	VMQ	SUB-1985
E100351101	41.00	35.00	6.50	6.00	NBR	SUB-942
E10025K301	41.27	25.40	8.73	7.93	HYTREL	PUB-1370
E10028K301	41.27	28.57	10.50	9.52	HYTREL	PUB-1966
E10031S401	41.27	31.75	5.25	4.76	HNBR	SUB-2562
E100346803	41.27	34.92	3.50	3.17	FKM	SUB-2625
E10034L501	41.27	34.92	3.50	3.17	PU	PUB-969
E100346802	41.27	34.92	6.98	6.35	FKM	SUB-3173
E10031L508	41.28	31.75	8.73	7.94	PU	PUB-1675
E10034L505	41.28	34.93	6.98	6.35	PU	PUB-1680
E10031L401	41.50	31.50	6.50	6.00	PU	PUB-934
E10031L504	42.00	31.00	7.20	6.50	PU	PUB-1443
E100326601	42.00	32.00	8.00	7.30	FKM	SUB-1501
E10032L502	42.00	32.00	8.40	7.80	PU	PUB-1372
E10032L506	42.00	32.00	9.00	8.00	PU	PUB-1985
E10034L502	42.00	34.00	6.50	6.00	PU	PUB-1338
E10036S402	42.50	36.50	6.98	6.35	HNBR	SUB-4184
E100366704	42.85	36.50	7.62	6.99	FKM	SUB-3503
E100304501	42.86	30.16	8.73	7.94	VMQ	SUB-2395
E10033L503	42.86	33.34	8.73	7.94	PU	PUB-1681
E10036D701	42.86	36.51	6.98	6.35	HNBR	SUB-2649
E100366702	42.86	36.51	7.62	6.98	FKM	SUB-2503
E10032L501	43.00	32.00	4.69	4.20	PU	PUB-582
E100301103	44.00	30.00	7.62	7.00	NBR	SUB-2316
E10036L502	44.00	36.00	9.00	8.00	PU	PUB-2013
E10028S402	44.45	28.57	8.40	7.87	HNBR	SUB-4169
E10028R301	44.45	28.57	17.47	15.87	PU	PUB-827
E10031K302	44.45	31.75	6.98	6.35	HYTREL	PUB-2023
E100342201	44.45	34.92	8.73	7.94	CR	SUB-2526
E100341003	44.45	34.92	9.00	8.00	NBR	SUB-3867
E100341101	44.45	34.92	10.50	9.52	NBR	SUB-4015
E10034L503	44.45	34.92	10.50	9.52	PU	PUB-1529
E10034L506	44.45	34.93	6.98	6.35	PU	PUB-1679
E100341002	44.45	34.93	8.00	7.50	NBR	SUB-3868
E100386711	44.45	38.10	3.50	3.17	FKM	SUB-3331
E10038L501	44.45	38.10	3.50	3.17	PU	PUB-970
E10038S401	44.45	38.10	3.50	3.17	HNBR	SUB-3043
E10038C401	44.45	38.10	6.98	6.35	XNBR	SUB-3784

Part No.	D (H10)	d (f8/h9)	L (+0.2)	H	Material	Mould No.
E10038S404	44.45	38.10	6.98	6.35	HNBR	SUB-4166
E100386602	44.45	38.10	7.20	6.50	FKM	SUB-2442
E100381103	44.50	38.10	6.50	6.10	NBR	SUB-2877
E100381201	44.50	38.10	6.50	6.10	NBR	SUB-3113
E10030L504	45.00	30.00	11.00	10.00	PU	PUB-1661
E100326602	45.00	32.00	11.00	10.00	FKM	SUB-3275
E10035L503	45.00	35.00	6.50	6.00	PU	PUB-1987
E10035L401	45.00	35.00	6.50	6.00	PU	PUB-986
E10035L501	45.00	35.00	7.62	7.00	PU	PUB-1079
E10035L501	45.00	35.00	7.62	7.00	PU	PUB-451
E100358701	45.00	35.00	9.00	8.00	PU	PUB-824
E10035L504	45.00	35.00	9.00	8.00	PU	PUB-1988
E10035L505	45.00	35.00	11.00	10.00	PU	PUB-2016
E10038L402	45.00	38.00	6.50	6.00	PU	PUB-1331
E100361002	46.00	36.00	6.98	6.30	NBR	SUB-3232
E100366703	46.00	36.00	8.00	7.30	FKM	SUB-2826
E10036L503	46.00	36.00	9.00	8.00	PU	PUB-2012
E10030O501	46.05	36.52	8.73	7.95	HYTREL	PUB-2029
E10036S401	46.35	36.83	10.50	9.52	HNBR	SUB-4148
E10032L507	47.00	32.00	11.00	10.00	PU	PUB-1986
E100316702	47.62	31.75	8.73	7.93	FKM	SUB-2463
E100344501	47.62	34.92	9.38	8.38	VMQ	SUB-4189
E10038L504	47.62	38.10	4.70	4.30	PU	PUB-1606
E100380802	47.62	38.10	7.62	7.00	NBR	PUB-947
E100380804	47.62	38.10	7.70	7.20	PU	PUB-1082
E10038L502	47.62	38.10	10.00	9.00	PU	PUB-1447
E100386710	47.62	38.10	11.00	10.00	FKM	SUB-3186
E10031L509	47.63	31.75	8.73	7.94	PU	PUB-1674
E10038L507	47.63	38.10	6.98	6.35	PU	PUB-2010
E10041L502	47.63	41.28	5.25	4.76	PU	PUB-1678
E10041L504	47.63	41.28	10.50	9.53	PU	PUB-2002
E10031D601	47.66	31.71	10.50	9.52	HNBR	SUB-3741
E10038L401	48.00	38.00	6.50	6.00	PU	PUB-987
E100406702	48.00	40.00	5.50	5.00	FKM	SUB-3017
E10040L506	48.00	40.00	6.50	6.00	PU	PUB-1602
E10040L511	48.00	40.00	6.50	6.00	PU	PUB-2011
E10040L512	48.00	40.00	9.00	8.00	PU	PUB-2009
E10040L513	48.00	40.00	11.00	10.00	PU	PUB-2008
E10039D701	49.02	39.62	10.50	9.52	HNBR	SUB-3337
E100306701	50.00	30.00	11.50	10.50	FKM	SUB-1548
E10030L503	50.00	30.00	13.00	12.00	PU	PUB-1150
E10035L506	50.00	35.00	9.00	8.00	PU	PUB-2015
E10035L507	50.00	35.00	11.00	10.00	PU	PUB-2014
E10035L502	50.00	35.00	11.50	10.50	PU	PUB-565
E100361001	50.00	36.00	9.00	8.00	NBR	SUB-2238
E10036L501	50.00	36.00	11.00	10.00	PU	PUB-1093
E10038L503	50.00	38.00	8.00	7.50	PU	PUB-1545
E100386703	50.00	38.00	10.00	9.00	FKM	SUB-1532
E10040L507	50.00	40.00	5.50	5.00	PU	PUB-1717
E10040L514	50.00	40.00	6.50	6.00	PU	PUB-1999
E10040L402	50.00	40.00	6.50	6.00	PU	PUB-913
E10040L508	50.00	40.00	7.62	7.00	PU	PUB-1770

Bold sizes are readily available in stock.
Other materials are available on request.

E10

Single Acting Symmetrical Seal

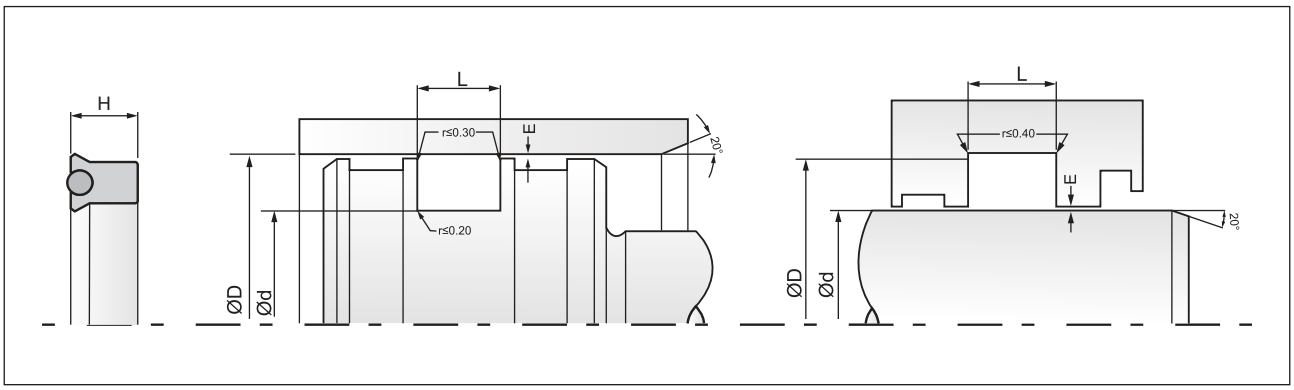

Part No.	D (H10)	d (f8/h9)	L (+0.2)	H	Material	Mould No.
E10040L515	50.00	40.00	8.00	7.30	PU	PUB-2000
E100406702	50.00	40.00	8.00	7.30	FKM	SUB-3969
E10040L501	50.00	40.00	8.00	7.50	PU	PUB-814
E10040L501	50.00	40.00	8.00	7.50	PU	PUB-1142
E10040L510	50.00	40.00	8.00	7.50	PU	PUB-1965
E10040L516	50.00	40.00	9.00	8.00	PU	PUB-2001
E10040L517	50.00	40.00	11.00	10.00	PU	PUB-2003
E10040L502	50.00	40.00	11.00	10.00	PU	PUB-1742
E10040L401	50.00	40.00	14.30	13.00	PU	PUB-557
E10042L501	50.00	42.00	7.20	6.50	PU	PUB-1154
E100428701	50.00	42.00	7.20	6.50	PU	PUB-1060
E10042L502	50.00	42.00	9.00	8.00	PU	PUB-2004
E100391002	50.20	39.90	7.40	6.80	NBR	SUC-1563
E10025L521	50.80	25.40	13.97	12.70	PU	PUC-1411
E10031L511	50.80	31.75	6.98	6.35	PU	PUC-1433
E10031K301	50.80	31.75	10.50	9.52	HYT	PUC-1385
E100316701	50.80	31.75	10.50	9.52	FKM	SUC-1708
E10031L510	50.80	31.75	10.50	9.53	PU	PUC-1180
E10031L502	50.80	31.75	13.97	12.70	PU	PUC-583
E10031C401	50.80	31.75	13.97	12.70	XNBR	SUC-2056
E100311102	50.80	31.75	17.47	15.87	NBR	SUC-2500
E10031C501	50.80	31.76	13.50	12.50	XNBR	SUC-2307
E10034K301	50.80	34.92	8.73	7.92	HYT	PUC-1440
E10034K301	50.80	34.92	13.97	12.70	HYT	PUC-1044
E10034L507	50.80	34.93	8.73	7.93	PU	PUC-1279
E100386712	50.80	38.10	6.98	6.35	FKM	SUC-2575
E10038L505	50.80	38.10	6.98	6.35	PU	PUC-1179
E10038L508	50.80	38.10	8.73	7.94	PU	PUC-1416
E10038C402	50.80	38.10	10.50	9.52	XNBR	SUC-2526
E100381101	50.80	38.10	10.50	9.52	NBR	SUC-848
E10038S403	50.80	38.86	10.50	9.52	HNBR	SUC-2722
E100416704	50.80	41.27	5.25	4.76	FKM	SUC-2224
E100416703	50.80	41.27	5.50	5.00	FKM/BFT	SUC-2310
E10041L501	50.80	41.27	8.73	7.93	PU	PUC-844
E10041S402	50.80	41.27	10.50	9.52	HNBR	SUC-2793
E10041L505	50.80	41.28	6.98	6.35	PU	PUC-1409
E10041L503	50.80	41.28	10.50	9.53	PU	PUC-1178
E10044S402	50.80	44.45	6.98	6.35	HNBR	SUC-2362
E10044S402	50.80	44.45	7.62	6.98	HNBR	SUC-2159
E100446703	50.80	44.45	10.50	9.52	FKM	SUC-1533
E10041D701	51.35	41.93	10.50	9.52	HNBR	SUC-2244
E10040L403	52.00	40.00	9.00	8.00	PU	PUC-998
E10031C402	52.38	31.75	13.50	12.52	XNBR	SUC-2796
E10042CG01	52.38	42.86	10.50	9.52	PU	PUC-1211
E10035L402	53.00	35.00	5.50	5.00	PU	PUC-997
E100381106	53.97	38.10	8.73	7.93	NBR	SUC-1744
E10041S401	53.97	41.27	6.98	6.35	HNBR	SUC-2240
E10041K302	53.97	41.27	10.50	9.52	HYTREL	PUC-1439
E10044K301	53.97	44.45	5.24	4.74	HYTREL	PUC-1524
E10044C401	53.97	44.45	5.25	4.76	XNBR	SUC-2665
E100441103	53.97	44.45	10.50	9.52	NBR	SUC-2698
E10044S404	53.97	44.45	10.50	9.52	HNBR	SUC-2286

Part No.	D (H10)	d (f8/h9)	L (+0.2)	H	Material	Mould No.
E10044D701	53.97	44.45	10.50	9.52	HNBR	SUC-1365
E100446805	53.97	44.45	10.50	9.52	FKM	SUC-1754
E10044S403	53.97	44.45	19.50	17.50	HNBR	SUC-2206
E10044S403	53.97	44.45	19.50	17.50	PEEK	PPA-2357
E10038L509	53.98	38.10	10.50	9.53	PU	PUC-1417
E10044L505	53.98	44.45	10.50	9.53	PU	PUC-1177
E100456709	54.00	45.00	9.00	8.00	FKM	SUC-2492
E10040L518	55.00	40.00	11.00	10.00	PU	PUC-1418
E10040L519	55.00	40.00	12.50	11.40	PU	PUC-1419
E10040L509	55.00	40.00	12.50	11.50	PU	PUC-1289
E10045L511	55.00	45.00	6.50	6.00	PU	PUC-1410
E10045L512	55.00	45.00	7.20	6.50	PU	PUC-1449
E10045L506	55.00	45.00	8.00	7.30	PU	PUC-1408
E10045L502	55.00	45.00	8.00	7.30	PU	PUC-796
E100456706	55.00	45.00	8.00	7.30	FKM	SUC-2067
E100456702	55.00	45.00	8.00	7.30	FKM	SUC-1948
E10045A601	55.00	45.00	8.00	7.40	NBR/FABRIC	SUC-2825
E10045L507	55.00	45.00	9.00	8.00	PU	PUC-1436
E10045L503	55.00	45.00	9.00	8.00	PU	PUC-931
E10045L504	55.00	45.00	10.70	9.60	PU	PUC-946
E10045L505	55.00	45.00	11.00	10.00	PU	PUC-612
E10045L508	55.00	45.00	11.00	10.00	PU	PUC-1435
E100386709	56.00	38.00	11.60	10.60	FKM	SUC-2133
E10045L402	56.00	45.00	7.62	7.00	PU	PUC-699
E100456704	56.00	45.00	10.00	9.00	FKM	SUC-1561
E100456705	57.00	45.00	10.00	9.00	FKM	SUC-1957
E100491101	57.00	49.00	5.74	5.25	NBR	SUC-1604
E100380801	57.15	38.10	10.50	9.52	NBR	SUC-1507
E100384501	57.15	38.10	11.00	9.90	VMQ	SUC-2802
E10041L506	57.15	41.28	10.50	9.53	PU	PUC-1424
E10044L506	57.15	44.45	6.98	6.35	PU	PUC-1176
E10044S401	57.15	44.45	6.98	6.35	HNBR	SUC-1982
E10044L507	57.15	44.45	8.73	7.94	PU	PUC-1160
E100441002	57.15	44.45	10.50	9.40	NBR	SUC-2592
E100448701	57.15	44.45	10.50	9.52	PU	PUC-1264
E10044L502	57.15	44.45	10.50	9.52	PU	PUC-402
E10047L504	57.15	47.62	6.98	6.35	PU	PUC-720
E10047D701	57.15	47.62	10.50	9.52	HNBR	SUC-454
E10047L506	57.15	47.63	8.73	7.94	PU	PUC-1165
E10050S401	57.15	50.80	3.50	3.17	HNBR	SUC-2095
E10050S402	57.15	50.80	7.62	6.98	HNBR	SUC-2160
E100503402	58.00	50.00	5.50	5.00	EPDM	SUC-2270
E10050L508	58.00	50.00	11.00	10.00	PU	PUC-922
E10049D701	58.72	49.30	10.50	9.52	HNBR	SUC-2245
E100451103	60.00	45.00	11.00	10.00	NBR	SUC-1545
E100455903	60.00	45.00	11.00	10.00	PU	PUC-675
E100456708	60.00	45.00	11.00	10.00	FKM	SUC-2335
E10045L509	60.00	45.00	11.00	10.00	PU	PUC-1434
E10045L510	60.00	45.00	12.50	11.40	PU	PUC-1422
E10047L505	60.00	47.00	7.20	6.50	PU	PUC-994
E10048L401	60.00	48.00	9.00	8.00	PU	PUC-999
E100506604	60.00	50.00	6.30	5.70	FKM	SUC-2189

Bold sizes are readily available in stock.
Other materials are available on request.

E10

Single Acting Symmetrical Seal

MAX SPARE LIMITED
QUALITY. PRECISION. SPEED.

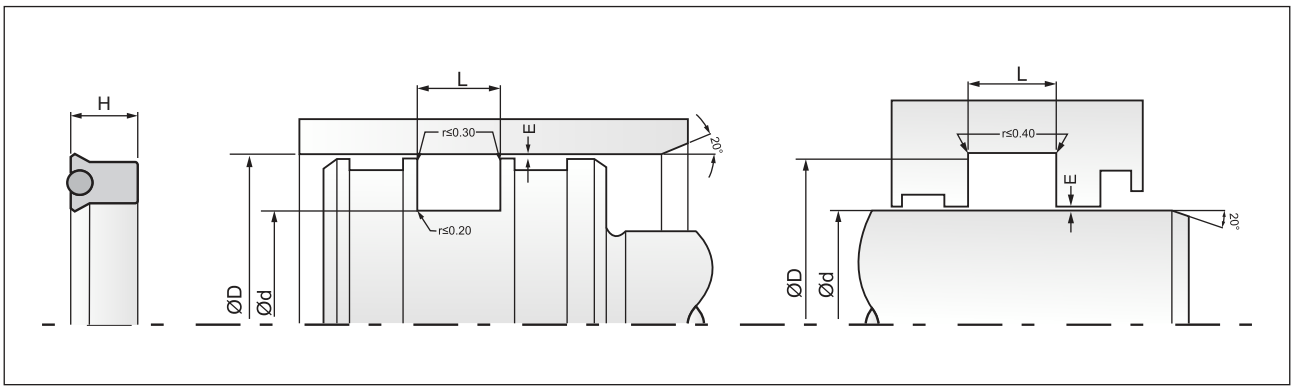

Part No.	D (H10)	d (f8/h9)	L (+0.2)	H	Material	Mould No.
E10050L517	60.00	50.00	6.50	6.00	PU	PUC-1407
E10050L506	60.00	50.00	7.62	7.00	PU	PUC-609
E10050L518	60.00	50.00	8.00	7.30	PU	PUC-1406
E10050L519	60.00	50.00	9.00	8.00	PU	PUC-1405
E10050L402	60.00	50.00	9.00	8.00	PU	PUC-724
E100506805	60.00	50.00	9.00	8.00	FKM	SUC-2162
E100506706	60.00	50.00	9.60	8.60	FKM	SUC-2134
E100506713	60.00	50.00	11.00	10.00	FKM	SUC-2519
E10050L520	60.00	50.00	11.00	10.00	PU	PUC-1404
E10050L401	60.00	50.00	15.20	14.00	PU	PUC-448
E100500803	60.30	50.80	6.98	6.35	NBR	SUC-2069
E10038L503	60.32	38.10	12.00	11.09	PU	PUC-1153
E10041K301	60.32	41.27	10.50	9.52	HYT	PUC-1387
E10047L503	60.32	47.62	10.50	9.52	PU	PUC-712
E10047S401	60.32	47.62	10.50	9.52	HNBR	SUC-1473
E100506714	60.32	50.80	6.98	6.35	FKM	SUC-2529
E100506603	60.32	50.80	8.73	7.93	FKM	SUC-2072
E100506803	60.32	50.80	10.50	9.52	FKM	SUC-1730
E10050D701	60.32	50.80	10.50	9.52	HNBR	SUC-1276
E10050D701	60.32	50.80	10.50	9.52	HNBR	SUC-1361
E10050R301	60.32	50.80	10.50	9.52	PU	PUC-140
E10044L508	60.33	44.45	10.50	9.53	PU	PUC-1161
E10050L510	60.33	50.80	6.98	6.35	PU	PUC-1163
E10050L511	60.33	50.80	8.73	7.94	PU	PUC-1166
E10050D601	60.33	50.80	10.50	9.52	HNBR	SUC-1208
E10050L512	60.33	50.80	10.50	9.53	PU	PUC-1164
E100501002	60.40	50.00	7.30	6.70	NBR	SUC-2681
E10052D701	61.91	52.38	10.50	9.52	HNBR	SUC-1360
E10052D701	61.91	52.38	10.50	9.52	HNBR	SUC-1277
E10052D601	61.91	52.38	10.50	9.52	HNBR	SUC-1209
E100526801	61.91	52.38	10.50	9.52	FKM	SUC-1731
E1005206701	61.91	52.38	10.50	9.52	FKM	SUC-1864
E10054S402	62.45	54.53	6.98	6.35	HNBR	SUC-2333
E10054S401	62.45	54.53	16.50	15.24	HNBR	SUC-2186
E10054S401	62.45	54.53	16.50	15.24	PEEK	PPA-2327
E100450802	63.00	45.00	11.00	10.20	NBR	SUC-1660
E10053L507	63.00	53.00	13.00	12.00	PU	PUC-1400
E10038D701	63.50	38.10	13.97	12.70	HNBR	SUC-2251
E10044L509	63.50	44.45	10.50	9.52	PU	PUC-1336
E100447901	63.50	44.45	10.50	9.52	HYTREL	PUC-677
E10044L503	63.50	44.45	10.50	9.52	PU	PUC-697
E10044L510	63.50	44.45	17.47	15.88	PU	PUC-1425
E10047L507	63.50	47.63	10.50	9.53	PU	PUC-1162
E10050L513	63.50	50.80	6.98	6.35	PU	PUC-1167
E10050L514	63.50	50.80	8.73	7.94	PU	PUC-1168
E10050L509	63.50	50.80	10.00	9.00	PU	PUC-964
E10050L301	63.50	50.80	10.50	9.52	NBR	SUC-2035
E10050L507	63.50	50.80	10.50	9.52	PU	PUC-711
E10050L503	63.50	50.80	10.50	9.52	PU	PUC-351
E100500804	63.50	50.80	10.50	9.52	NBR	SUC-2567
E100506708	63.50	50.80	10.50	9.52	FKM	SUC-2345
E100506715	63.50	50.80	10.50	9.52	FKM	SUC-2812

Part No.	D (H10)	d (f8/h9)	L (+0.2)	H	Material	Mould No.
E10050L515	63.50	50.80	10.50	9.53	PU	PUC-1169
E100506707	63.50	50.80	11.00	10.00	FKM	SUC-2158
E100531201	63.50	53.97	10.00	9.00	NBR	SUC-448
E100536801	63.50	53.97	10.50	9.52	FKM	SUC-1755
E10053D701	63.50	53.97	10.50	9.52	HNBR	SUC-1366
E10053L501	63.50	53.98	5.25	4.75	PU	PUC-460
E10053L503	63.50	53.98	5.25	4.76	PU	PUC-1170
E10053L504	63.50	53.98	6.98	6.35	PU	PUC-1171
E10053L505	63.50	53.98	8.73	7.95	PU	PUC-1172
E10053L506	63.50	53.98	10.50	9.53	PU	PUC-1173
E100540801	63.50	54.00	6.98	6.35	NBR	SUC-2070
E100548701	63.50	54.00	10.50	9.50	PU	PUC-613
E10057L508	63.50	57.15	6.98	6.35	PU	PUC-1398
E10057L509	63.50	57.15	10.50	9.53	PU	PUC-1397
E10055D701	64.77	55.24	10.50	9.52	HNBR	SUC-2424
E10040L503	65.00	40.00	13.97	12.70	PU	PUC-780
E10045L401	65.00	45.00	15.20	14.00	PU	PUC-449
E100506705	65.00	50.00	7.62	7.00	FKM	SUC-2132
E100506703	65.00	50.00	10.50	9.50	FKM	SUC-1958
E10050L521	65.00	50.00	11.00	10.00	PU	PUC-1403
E100506710	65.00	50.00	11.00	10.00	FKM	SUC-2407
E10050L516	65.00	50.00	12.50	11.40	PU	PUC-1273
E10050L522	65.00	50.00	12.50	11.40	PU	PUC-1402
E100506804	65.00	50.00	13.00	12.00	FKM	SUC-2161
E100506709	65.00	50.90	11.00	10.00	FKM	SUC-2408
E10054L501	65.00	54.00	5.50	5.00	PU	PUC-875
E10055L501	65.00	55.00	7.70	7.20	PU	PUC-932
E10055L502	65.00	55.00	8.00	7.30	PU	PUC-1432
E100506704	65.80	50.80	11.00	10.00	FKM	SUC-2183
E100507902	66.00	50.00	9.90	8.89	HYTREL	PUC-1135
E100506711	66.00	50.00	11.00	10.00	FKM	SUC-2416
E10056L502	66.00	56.00	7.62	7.00	PU	PUC-1428
E100566705	66.00	56.00	9.00	8.00	FKM	SUC-2068
E100476702	66.67	47.62	10.50	9.52	FKM	SUC-1709
E10047R301	66.67	47.62	17.47	15.87	PU	PUC-621
E10053C401	66.67	53.97	10.50	9.52	XNBR	SUC-2062
E10053L502	66.67	53.97	10.50	9.52	PU	PUC-713
E100576701	66.67	57.15	8.73	7.93	FKM	SUC-2268
E10057D701	66.67	57.15	10.50	9.52	HNBR	SUC-1367
E100576801	66.67	57.15	10.50	9.52	FKM	SUC-1732
E100606602	66.67	60.32	3.50	3.17	FKM	SUC-1111
E10060S402	66.67	60.32	6.98	6.35	HNBR	SUC-2269
E10050L524	66.68	50.80	10.50	9.53	PU	PUC-1426
E10050L525	66.68	50.80	13.97	12.70	PU	PUC-1399
E10053L508	66.68	53.98	6.98	6.35	PU	PUC-1393
E10053L509	66.68	53.98	10.50	9.53	PU	PUC-1394
E10057L503	66.68	57.15	5.25	4.76	PU	PUC-1174
E10057L504	66.68	57.15	6.98	6.35	PU	PUC-1175
E10057L505	66.68	57.15	8.73	7.94	PU	PUC-1184
E10057L510	66.68	57.15	10.50	9.53	PU	PUC-1396
E100506602	67.00	50.80	11.00	10.20	FKM	SUC-1700
E10058D701	67.94	58.42	10.50	9.52	HNBR	SUC-2322

Bold sizes are readily available in stock.
Other materials are available on request.

E10

Single Acting Symmetrical Seal

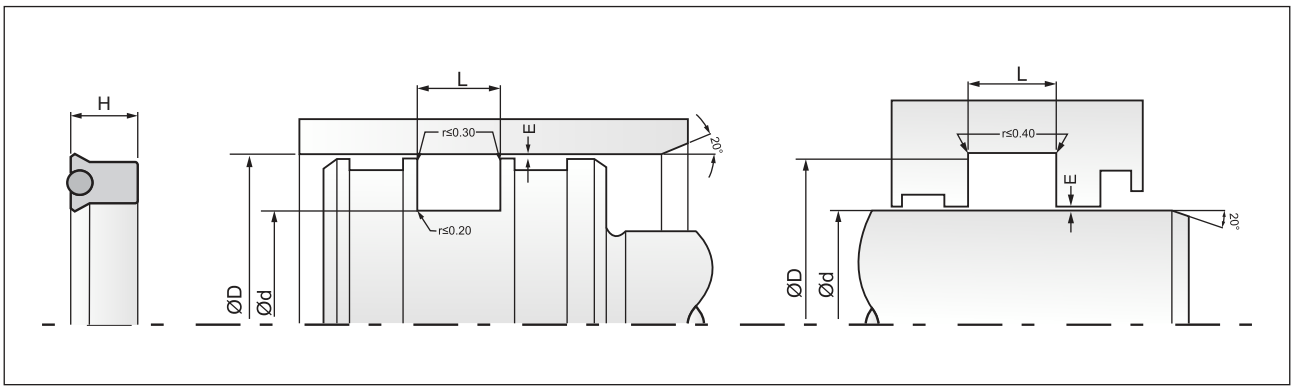

Part No.	D (H10)	d (f8/h9)	L (+0.2)	H	Material	Mould No.
E10060L401	68.00	60.00	10.00	9.00	PU	PUC-1000
E10038L504	69.85	38.10	17.47	15.87	PU	PUC-1155
E10050K302.	69.85	50.80	10.50	9.52	HYT	PUC-1386
E100500801	69.85	50.80	10.50	9.52	NBR	SUC-1508
E10050K302	69.85	50.80	17.47	15.74	HYT	PUC-1024
E10050S403	69.85	50.80	17.47	15.87	HNBR	SUC-2576
E10050C401	69.85	50.80	17.47	15.87	XNBR	SUC-2655
E10057L512	69.85	57.15	10.50	9.52	PU	SUC-2801
E10057K302	69.85	57.15	10.50	9.52	HYTREL	PUC-1445
E100570801	69.85	57.15	10.50	9.52	PU	PUC-770
E10057S401	69.85	57.15	10.50	9.52	HNBR	SUC-1617
E10057L506	69.85	57.15	10.50	9.53	PU	PUC-1183
E10060L505	69.85	60.32	5.25	4.76	PU	PUC-1299
E100601107	69.85	60.32	10.50	9.52	NBR	SUC-2697
E10060L515	69.85	60.33	6.98	6.35	PU	PUC-1395
E10050L523	70.00	50.00	11.00	10.00	PU	PUC-1401
E10055L503	70.00	55.00	10.00	9.00	PU	PUC-1431
E10055L504	70.00	55.00	11.00	10.00	PU	PUC-1430
E100556601	70.00	55.00	12.00	11.00	FKM	SUC-2823
E10055L505	70.00	55.00	12.50	11.40	PU	PUC-1429
E100566602	70.00	56.00	10.00	9.20	FKM/PTFE	SUC-2808
E100561105	70.00	56.00	11.00	10.20	NBR	SUC-1661
E10060L507	70.00	60.00	6.50	6.00	PU	PUC-1413
E10060L508	70.00	60.00	7.62	7.00	PU	PUC-1414
E100601104	70.00	60.00	8.00	7.30	NBR	SUC-1781
E10060L509	70.00	60.00	9.00	8.00	PU	PUC-1415
E10060L510	70.00	60.00	11.00	10.00	PU	PUC-1423
E100606702	70.00	60.00	11.00	10.00	FKM	SUC-2457
E10060L511	70.00	60.00	13.00	12.00	PU	PUC-1420
E10060D701	70.28	60.40	10.50	9.52	HNBR	SUC-2420
E010571002	70.51	57.65	8.73	7.95	NBR	SUC-2534
E10056L503	71.00	56.00	11.00	10.00	PU	PUC-1427
E10056L504	71.00	56.00	12.50	11.40	PU	PUC-1412
E100566704	71.00	56.00	12.50	11.40	FKM	SUC-1613
E10056L501	71.00	56.00	12.50	11.40	PU	PUC-1150
E100566601	71.00	56.00	12.50	11.50	FKM	SUC-2710
E100606703	71.00	60.00	15.20	14.00	FKM	SUC-2584
E10063L503	71.00	63.00	13.00	12.00	PU	PUC-435
E100616801	71.43	61.91	10.50	9.52	FKM	SUC-1733
E10061D601	71.43	61.91	10.50	9.52	HNBR	SUC-1210
E10061D701	71.43	61.91	10.50	9.52	HNBR	SUC-1278
E10061D701	71.43	61.91	10.50	9.52	HNBR	SUC-1362
E10063S402	71.57	63.65	6.98	6.35	HNBR	SUC-2332
E10063S401	71.57	63.65	16.50	15.24	PEEK	PPA-2326
E10063S401	71.57	63.65	16.50	15.24	HNBR	SUC-2185
E10060001	71.67	60.32	5.74	5.25	NBR	SUC-2071
E10066S402	72.02	66.67	6.98	6.35	HNBR	SUC-2363
E10063L401	73.00	63.50	8.00	7.40	PU	PUC-1001
E10057O501	73.02	57.15	13.97	12.70	HYTREL	PUC-1324
E10057C401	73.02	57.15	13.97	12.70	XNBR	SUC-1817
E10060L502	73.02	60.32	10.50	9.52	PU	PUC-714
E10063L522	73.02	63.50	8.73	7.92	PU	PUC-1546

Part No.	D (H10)	d (f8/h9)	L (+0.2)	H	Material	Mould No.
E10063D701	73.02	63.50	10.50	9.52	HNBR	SUC-1368
E10060L503	73.03	60.33	10.50	9.53	PU	PUC-1182
E10063L516	73.03	63.50	6.98	6.35	PU	PUC-1181
E10063D702	73.83	63.70	10.50	9.52	HNBR	SUC-2323
E10067L401	74.00	67.00	6.50	6.00	PU	PUC-905
E100508301	75.00	50.00	16.50	15.60	NBR/FABRIC	SUC-1168
E10055L401	75.00	55.00	15.20	14.00	PU	PUC-447
E10060L512	75.00	60.00	11.00	10.00	PU	PUC-1421
E100606401	75.00	60.00	12.00	11.00	FKM	SUC-1405
E10060L506	75.00	60.00	12.50	11.40	PU	PUC-1323
E10060L513	75.00	60.00	12.50	11.40	PU	PUC-1437
E100605903	75.00	60.00	13.50	12.50	PU	PUC-244
E100606801	75.00	60.00	14.30	13.00	FKM	SUC-2163
E100636602	75.00	63.00	10.50	9.50	FKM	SUC-2397
E10065L502	75.00	65.00	6.50	6.00	PU	PUC-1390
E10065L503	75.00	65.00	8.00	7.30	PU	PUC-1392
E10065L504	75.00	65.00	9.00	8.00	PU	PUC-1391
E10065L401	75.00	65.00	14.30	13.00	PU	PUC-451
E100631002	75.50	63.50	5.74	5.25	NBR	SUD-1592
E10057L501	76.20	57.15	10.50	9.52	PU	PUD-145
E10057L507	76.20	57.15	10.50	9.53	PU	PUD-967
E10057L502	76.20	57.15	17.47	15.87	PU	PUD-864
E100601106	76.20	60.32	8.73	7.93	NBR	SUD-1693
E10060L504	76.20	60.33	13.97	12.70	PU	PUD-966
E10061L501	76.20	61.91	12.00	11.11	PU	PUD-831
E100636706	76.20	63.50	5.24	4.74	FKM	SUD-2145
E10063L508	76.20	63.50	7.20	6.50	PU	PUD-781
E10063L504	76.20	63.50	8.73	7.93	PU	PUD-533
E10063L519	76.20	63.50	8.73	7.94	PU	PUD-1100
E10063L507	76.20	63.50	10.50	9.50	PU	PUD-687
E10063L506	76.20	63.50	10.50	9.52	PU	PUD-618
E10063L502	76.20	63.50	10.50	9.52	PU	PUD-373
E100636703	76.20	63.50	10.50	9.52	FKM	SUD-1271
E100631001	76.20	63.50	10.50	9.52	NBR	SUD-1970
E100636801	76.20	63.50	10.50	9.52	FKM	SUD-2147
E10063L509	76.20	63.50	10.50	9.53	PU	PUD-960
E100667901	76.20	66.67	10.50	9.52	HYT-1+NT4/B	PUD-479
E10066D701	76.20	66.67	10.50	9.52	HNBR	SUD-1001
E100666801	76.20	66.67	10.50	9.52	FKM	SUD-1318
E10066L503	76.20	66.67	10.50	9.52	PU	PUD-620
E10066L504	76.20	66.68	6.98	6.35	PU	PUD-958
E10066L505	76.20	66.68	10.50	9.53	PU	PUD-965
E100706602	77.25	70.00	6.70	6.20	FKM	SUD-1207
E100636704	77.78	63.50	10.50	9.52	FKM	SUD-994
E100636601	78.00	63.00	10.50	9.50	FKM	SUD-1626
E10063L517	78.00	63.00	11.00	10.00	PU	PUD-1126
E10063L518	78.00	63.00	12.50	11.40	PU	PUD-1102
E100650901	78.00	65.00	10.70	9.80	NBR	SUD-1979
E10060C401	79.37	60.32	17.47	15.87	XNBR	SUD-2013
E10063K303	79.37	63.50	13.97	12.70	HYTREL	PUD-1069
E10063K302	79.37	63.50	15.50	14.28	HYTREL	PUD-735
E10063K301	79.37	63.50	24.50	22.40	HYTREL	PPA-1728

Bold sizes are readily available in stock.
Other materials are available on request.

E10

Single Acting Symmetrical Seal

MAX SPARE LIMITED
QUALITY. PRECISION. SPEED.

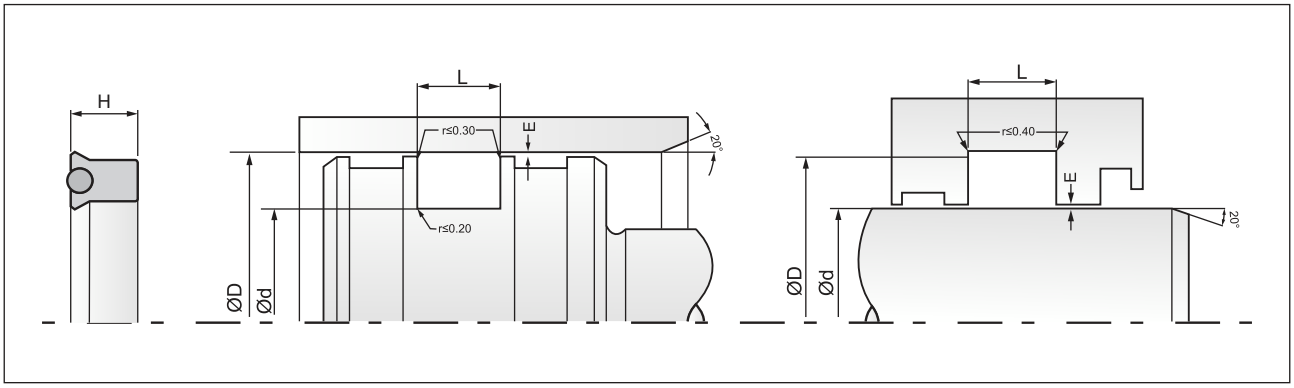

Part No.	D (H10)	d (f8/h9)	L (+0.2)	H	Material	Mould No.
E10066L502	79.37	66.27	10.50	9.52	PU	PUD-433
E100668301	79.37	66.67	10.50	9.52	NBR/FABRIC	SUD-1016
E10069D703	79.37	69.85	10.50	9.52	HNBR	SUD-1643
E10069L504	79.37	69.85	10.50	9.52	PU	PUD-621
E10069D701	79.37	69.85	10.50	9.52	HNBR	SUD-1002
E100696801	79.37	69.85	10.50	9.52	FKM	SUD-1319
E10073S404	79.37	73.02	7.62	6.98	HNBR	SUD-1662
E10063L510	79.38	63.50	8.73	7.94	PU	PUD-961
E10063L511	79.38	63.50	10.50	9.53	PU	PUD-962
E10063L512	79.38	63.50	13.97	12.70	PU	PUD-963
E10066L508	79.38	66.68	6.98	6.35	PU	PUD-1114
E10066L506	79.38	66.68	10.50	9.53	PU	PUD-973
E10069L507	79.38	69.85	10.50	9.53	PU	PUD-974
E10060L514	80.00	60.00	11.00	10.00	PU	PUD-1127
E10060L501	80.00	60.00	13.50	12.50	PU	PUD-210
E100606603	80.00	60.00	15.20	14.00	FKM	SUD-1071
E10065L505	80.00	65.00	12.50	11.40	PU	PUD-1101
E10065S401	80.00	65.00	14.30	13.00	HNBR	SUD-1991
E10068L501	80.00	68.00	7.62	7.00	PU	PUD-954
E10068L502	80.00	68.00	11.00	10.00	PU	PUD-1123
E10068L503	80.00	68.00	13.00	12.00	PU	PUD-1122
E10070L506	80.00	70.00	6.50	6.00	PU	PUD-1121
E100706710	80.00	70.00	7.20	6.50	FKM	SUD-1635
E100706703	80.00	70.00	7.62	7.00	FKM	SUD-752
E10070L507	80.00	70.00	7.62	7.00	PU	PUD-1119
E10070L508	80.00	70.00	9.00	8.00	PU	PUD-1120
E100706704	80.00	70.00	11.00	10.00	FKM	SUD-643
E10070L509	80.00	70.00	11.00	10.00	PU	PUD-1107
E100708702	80.00	70.00	12.50	11.40	PU	PUD-344
E100701107	80.00	70.00	12.50	11.40	NBR	SUD-1594
E100701003	80.20	70.00	7.30	6.70	NBR	SUD-2031
E100700801	80.54	70.24	10.50	9.52	PU	PUD-797
E100601105	81.00	60.00	11.00	10.00	NBR	SUD-1668
E10070L502	82.00	70.00	10.00	9.00	PU	PUD-253
E100736706	82.00	73.00	10.00	9.30	FKM	SUD-1322
E100726701	82.40	72.88	12.50	11.70	FKM	SUD-1557
E10069L503	82.50	69.85	5.25	4.76	PU	PUD-465
E10069L501	82.50	69.85	10.50	9.52	PU	PUD-388
E100738701	82.50	73.00	7.62	7.00	PU	PUD-425
E100630801	82.55	63.50	10.50	9.52	NBR	SUD-1156
E10063L521	82.55	63.50	10.50	9.53	PU	PUD-1115
E10063L513	82.55	63.50	13.97	12.70	PU	PUD-964
E10063L514	82.55	63.50	17.47	15.88	PU	PUD-959
E10066L509	82.55	66.68	8.73	7.94	PU	PUD-1118
E10066L507	82.55	66.68	13.97	12.70	PU	PUD-969
E10069L509	82.55	69.85	6.98	6.35	PU	PUD-1113
E10069Q201	82.55	69.85	6.98	6.35	PU	PUD-1084
E100696701	82.55	69.85	6.98	6.35	FKM	SUD-1419
E100695902	82.55	69.85	6.98	6.35	PU	PUD-865
E10069D702	82.55	69.85	10.50	9.52	HNBR	SUD-1456
E100696601	82.55	69.85	10.50	9.52	FKM	SUD-1033
E100691002	82.55	69.85	10.50	9.52	NBR	SUD-1126

Part No.	D (H10)	d (f8/h9)	L (+0.2)	H	Material	Mould No.
E10069L502	82.55	69.85	10.50	9.52	PU	PUD-184
E10069L505	82.55	69.85	10.50	9.52	PU	PUD-665
E100696702	82.55	69.85	10.50	9.52	FKM	SUD-1590
E10069K301	82.55	69.85	10.50	9.52	HYTREL	PUD-1079
E10069L510	82.55	69.85	10.50	9.53	PU	PUD-1112
E10069L511	82.55	69.85	13.97	12.70	PU	PUD-1111
E100736703	82.55	73.02	5.25	4.76	FKM	SUD-1055
E10073L512	82.55	73.02	6.98	6.35	PU	PUD-970
E10073L505	82.55	73.02	8.73	7.94	PU	PUD-971
E10073D701	82.55	73.02	10.50	9.52	HNBR	SUD-1801
E100736702	82.55	73.02	10.50	9.52	FKM	SUD-1043
E10073K301	82.55	73.02	10.50	9.52	HYT	PUD-799
E10073L506	82.55	73.02	10.50	9.53	PU	PUD-972
E100736707	82.55	73.03	10.50	9.49	FKM	SUD-1821
E10073L403	82.55	73.22	13.50	12.50	PU	PUD-607
E100686701	83.00	68.00	14.30	13.00	FKM	SUD-1868
E100766601	83.00	76.20	6.70	6.20	FKM	SUD-1208
E10075D701	84.50	75.08	10.50	9.52	HNBR	SUD-1805
E100641001	85.00	64.00	13.00	12.00	NBR	SUD-1283
E10070L510	85.00	70.00	10.00	9.00	PU	PUD-1106
E10070L511	85.00	70.00	11.00	10.00	PU	PUD-1125
E10070L505	85.00	70.00	12.00	11.00	PU	PUD-1077
E10070L512	85.00	70.00	12.50	11.40	PU	PUD-1124
E100706708	85.00	70.00	12.50	11.50	FKM	SUD-1485
E100706705	85.00	70.00	13.00	12.00	FKM	SUD-830
E10075L501	85.00	75.00	6.50	6.00	PU	PUD-1098
E10075L502	85.00	75.00	7.62	7.00	PU	PUD-1105
E10075L503	85.00	75.00	9.00	8.00	PU	PUD-1104
E10075L504	85.00	75.00	11.00	10.00	PU	PUD-1103
E100756701	85.00	75.00	12.50	11.50	FKM	SUD-1246
E100661102	85.72	66.67	10.50	9.52	NBR	SUD-953
E10073S402	85.72	73.02	9.50	8.50	HNBR	SUD-1089
E10073D601	85.72	73.02	10.50	9.45	HNBR	SUD-1993
E100738601	85.72	73.02	13.50	12.53	FKM/FABRIC	SUD-1082
E10073L402	85.72	73.02	17.47	15.70	PU	PUD-502
E10073S401	85.72	73.02	17.47	15.70	HNBR	SUD-1088
E100736701	85.72	73.02	18.20	16.66	FKM	SUD-985
E100736701	85.72	73.02	18.20	16.66	FKM	SUD-844
E10073L401	85.72	73.02	18.20	16.66	PU	PUD-393
E10073L502	85.72	73.08	10.50	9.52	PU	PUD-619
E100767901	85.72	76.20	10.50	9.52	HYTREL	PUD-480
E100766801	85.72	76.20	10.50	9.52	FKM	SUD-1320
E10076D701	85.72	76.20	10.50	9.52	HNBR	SUD-998
E10063L515	85.73	63.50	12.00	11.13	PU	PUD-957
E10066L510	85.73	66.68	10.50	9.53	PU	PUD-1117
E10066L511	85.73	66.68	17.47	15.80	PU	PUD-1116
E10069L512	85.73	69.85	13.97	12.70	PU	PUD-1099
E10073L507	85.73	73.02	6.98	6.35	PU	PUD-990
E10073L508	85.73	73.02	10.50	9.53	PU	PUD-991
E10076L503	85.73	76.20	5.25	4.76	PU	PUD-988
E10080L502	87.30	80.00	6.00	5.50	PU	PUD-1036
E10075S401	87.50	75.00	6.98	6.30	HNBR	SUD-1972

Bold sizes are readily available in stock.
Other materials are available on request.

E10

Single Acting Symmetrical Seal

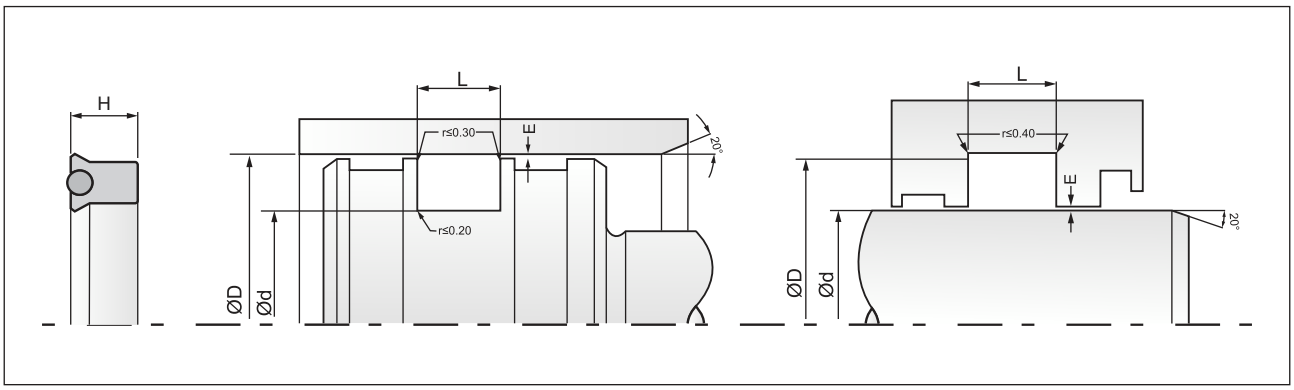

Part No.	D (H10)	d (f8/h9)	L (+0.2)	H	Material	Mould No.
E100706802	88.00	70.00	12.50	11.50	FKM	SUD-1664
E100706801	88.00	70.00	15.20	14.00	FKM	SUD-1665
E100696802	88.90	69.85	13.97	12.70	FKM	SUD-1661
E100696703	88.90	69.85	13.97	12.70	FKM	SUD-1675
E10069L506	88.90	69.85	13.97	12.70	PU	PUD-992
E10069L513	88.90	69.85	15.50	14.30	PU	PUD-1139
E10073L509	88.90	73.02	8.73	7.94	PU	PUD-987
E10073L510	88.90	73.02	13.97	12.70	PU	PUD-982
E10073L503	88.90	73.02	13.97	12.80	PU	PUD-681
E10073L504	88.90	73.03	8.73	7.93	PU	PUD-916
E10076L502	88.90	76.20	6.98	6.35	PU	PUD-534
E100760102	88.90	76.20	7.64	7.14	NBR	SUD-620
E100761002	88.90	76.20	10.00	9.20	NBR	SUD-1969
E100766704	88.90	76.20	10.50	9.52	FKM	SUD-1824
E100762301	88.90	76.20	10.50	9.52	CR	SUD-831
E10076L501	88.90	76.20	10.50	9.52	PU	PUD-529
E10076L504	88.90	76.20	10.50	9.53	PU	PUD-989
E100761003	88.90	76.20	11.00	10.00	NBR	SUD-1971
E100766802	88.90	76.20	11.00	10.10	FKM	SUD-1321
E10076D702	88.90	76.20	11.00	10.10	HNBR	SUD-1003
E100796801	88.90	79.37	10.50	9.52	FKM	SUD-1329
E10079D701	88.90	79.37	10.50	9.52	HNBR	SUD-1000
E10079L501	88.90	79.38	5.25	4.76	PU	PUD-985
E10079L502	88.90	79.38	6.98	6.35	PU	PUD-986
E100796703	88.90	79.38	10.50	9.49	FKM	SUD-1823
E10079L503	88.90	79.38	10.50	9.53	PU	PUD-978
E100826705	88.90	82.55	3.50	3.17	FKM	SUD-826
E10082L502	88.90	82.55	5.25	4.76	PU	PUD-466
E100708703	89.00	70.00	13.00	12.00	PU	PUD-438
E100701002	90.00	70.00	10.50	9.50	NBR	SUD-1309
E100700801.	90.00	70.00	15.20	14.00	NBR/FABRIC	SUD-2009
E100721001	90.00	72.00	10.50	9.40	NBR	SUD-1773
E10075L505	90.00	75.00	10.00	9.00	PU	PUD-1108
E100751001	90.00	75.00	11.00	10.00	NBR	SUD-1390
E10075L506	90.00	75.00	11.00	10.00	PU	PUD-1109
E100751003	90.00	75.00	11.00	10.20	NBR	SUD-2103
E100750901	90.00	75.00	11.00	10.20	NBR	SUD-1062
E10080L503	90.00	80.00	6.50	6.00	PU	PUD-1110
E10080L504	90.00	80.00	7.62	7.00	PU	PUD-1153
E100806704	90.00	80.00	7.62	7.00	FKM	SUD-1589
E10080L505	90.00	80.00	9.00	8.00	PU	PUD-1154
E10080L506	90.00	80.00	11.00	10.00	PU	PUD-1152
E100808701	92.00	80.00	10.00	9.00	PU	PUD-446
E100806601	92.00	80.00	10.00	9.00	FKM	SUD-1765
E10076S402	92.07	76.20	8.73	7.92	HNBR	SUD-1696
E10076L401	92.07	76.20	8.73	7.93	PU	PUD-879
E10076C401	92.07	76.20	13.97	12.70	XNBR	SUD-1375
E100796701	92.07	79.37	7.40	6.80	FKM	SUD-1326
E10079C401	92.07	79.37	10.50	9.52	XNBR	SUD-2014
E100796702	92.07	79.37	13.00	12.00	FKM	SUD-1433
E100826707	92.07	82.55	5.25	4.76	FKM	SUD-866
E100826706	92.07	82.55	10.50	9.52	FKM	SUD-860

Part No.	D (H10)	d (f8/h9)	L (+0.2)	H	Material	Mould No.
E100825401	92.07	82.55	10.50	9.52	HNBR	SUD-1066
E100826802	92.07	82.55	10.50	9.52	FKM	SUD-1330
E10082L401	92.07	82.55	13.50	12.50	PU	PUD-604
E10076L510	92.08	76.20	10.50	9.53	NBR	PUD-1140
E10076L505	92.08	76.20	13.97	12.70	PU	PUD-981
E10079L504	92.08	79.38	10.50	9.53	PU	PUD-977
E100826708	92.08	82.55	10.50	9.49	FKM	SUD-1822
E100806705	93.00	80.00	12.00	11.00	FKM	SUD-2050
E10085L515	93.00	85.00	9.00	8.00	PU	PUD-1145
E10085L516	93.00	85.00	12.50	11.50	PU	PUD-1151
E10080L509	95.00	80.00	10.00	9.00	PU	PUD-1148
E10080L507	95.00	80.00	11.00	10.00	PU	PUD-1150
E10080L508	95.00	80.00	12.50	11.40	PU	PUD-1149
E100836701	95.00	83.00	10.00	9.20	FKM	SUD-1323
E10085L508	95.00	85.00	6.50	6.00	PU	PUD-1129
E10085L404	95.00	85.00	8.00	7.50	PU	PUD-839
E10085L509	95.00	85.00	9.00	8.00	PU	PUD-1130
E10085L510	95.00	85.00	11.00	10.00	PU	PUD-1131
E100851001	95.00	85.00	11.00	10.00	NBR	SUD-1004
E100856706	95.09	85.58	13.00	12.00	FKM	SUD-1413
E100761105	95.25	76.20	6.98	6.35	NBR	SUD-1615
E10076L506	95.25	76.20	13.97	12.70	PU	PUD-983
E10076K302	95.25	76.20	17.47	15.87	HYT	PUD-791
E10076L507	95.25	76.20	17.47	15.88	PU	PUD-984
E100766703	95.25	76.20	17.60	16.00	FKM	SUD-1439
E10076K301	95.25	76.20	26.50	24.13	HYTREL	PPA-1729
E10082L509	95.25	82.55	13.97	12.70	PU	PUD-1141
E10085L507	95.25	85.72	6.98	6.35	PU	PUD-1042
E100856802	95.25	85.72	10.50	9.52	FKM	SUD-1331
E10085D601	95.25	85.72	10.50	9.52	HNBR	SUD-1142
E10085L503	95.25	85.73	5.25	4.76	PU	PUD-870
E100856707	95.25	85.73	10.50	9.49	FKM	SUD-1825
E10087L501	95.80	87.90	6.00	5.50	PU	PUD-830
E100866701	96.01	86.49	18.00	16.50	FKM	SUD-1558
E10084S402	96.15	84.15	9.50	8.50	HNBR	SUD-1091
E10084S401	96.15	84.15	17.47	15.70	HNBR	SUD-1090
E10084S403	96.83	84.13	10.50	9.52	HNBR	SUD-1135
E10084L401	96.85	84.15	17.47	15.70	PU	PUD-503
E10085S402	98.42	85.72	9.50	8.50	HNBR	SUD-1302
E100858601	98.42	85.72	13.50	12.53	FKM/FABRIC	SUD-1084
E100856703	98.42	85.72	18.20	16.66	FKM	SUD-847
E100856703	98.42	85.72	18.20	16.66	FKM	SUD-987
E10085L402	98.42	85.72	18.20	16.66	PU	PUD-395
E10088C402	98.42	88.90	10.50	9.52	XNBR	SUD-1918
E10088D702	98.42	88.90	10.50	9.52	HNBR	SUD-1457
E10088D601	98.42	88.90	10.50	9.52	HNBR	SUD-926
E10088D701	98.42	88.90	10.50	9.52	HNBR	SUD-997
E10088K303	98.42	88.90	10.50	9.52	HYTREL	PUD-1033
E100886601	98.42	88.90	11.80	10.80	FKM	SUD-1634
E10079L505	98.43	79.38	10.50	9.53	PU	PUD-976
E10082L505	98.43	82.55	13.97	12.70	PU	PUD-975
E10085L517	98.43	85.73	10.50	9.53	PU	PUD-1142

Bold sizes are readily available in stock.
Other materials are available on request.

E10

Single Acting Symmetrical Seal

MAX SPARE LIMITED
QUALITY. PRECISION. SPEED.

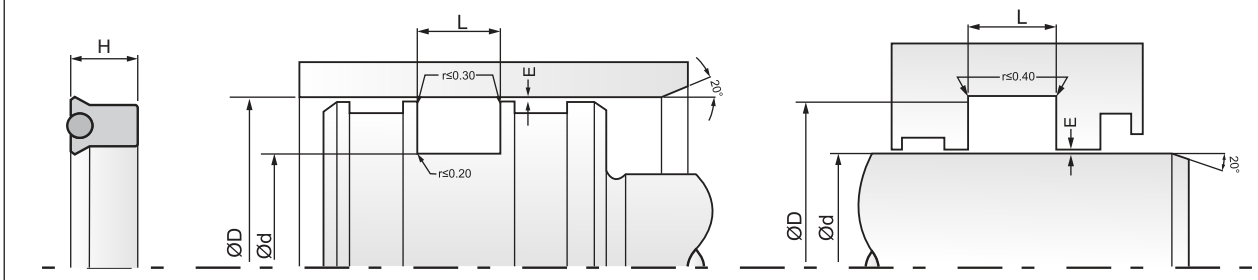

Part No.	D (H10)	d (f8/h9)	L (+0.2)	H	Material	Mould No.
E10088L504	98.43	88.90	5.25	4.78	PU	PUD-979
E10088L505	98.43	88.90	10.50	9.53	PU	PUD-980
E100896701	98.60	89.07	12.50	11.70	FKM	SUD-1555
E100876601	98.75	87.70	9.70	8.70	FKM	SUD-1209
E10080L510	100.00	80.00	11.00	10.00	PU	PUD-1147
E100806703	100.00	80.00	12.00	11.00	FKM	SUD-1356
E10080L511	100.00	80.00	13.00	12.00	PU	PUD-1146
E100806702	100.00	80.00	13.00	12.00	FKM	SUD-2148
E100851003	100.00	85.00	8.00	7.50	NBR	SUD-1883
E10085L511	100.00	85.00	10.00	9.00	PU	PUD-1132
E10085L512	100.00	85.00	11.00	10.00	PU	PUD-1133
E10085L513	100.00	85.00	12.50	11.40	PU	PUD-1134
E100866601	100.00	86.00	7.30	6.70	FKM	SUD-107
E10090L505	100.00	90.00	6.50	6.00	PU	PUD-1137
E100906702	100.00	90.00	6.50	6.00	FKM	SUD-753
E10090L506	100.00	90.00	7.62	7.00	PU	PUD-1135
E10090L507	100.00	90.00	9.00	8.00	PU	PUD-1138
E100906604	100.00	90.00	10.00	9.00	FKM	SUD-2135
E10090L508	100.00	90.00	11.00	10.00	PU	PUD-1128
E10076L508	101.60	76.20	13.97	12.70	PU	PUE-600
E10076L509	101.60	76.20	17.47	15.88	PU	PUE-599
E10076L511	101.60	76.20	20.95	19.05	PU	PUE-739
E10082L503	101.60	82.55	10.50	9.52	PU	PUE-395
E10082L506	101.60	82.55	10.50	9.53	PU	PUE-613
E100826803	101.60	82.55	11.00	10.00	FKM	SUE-996
E10082L501	101.60	82.55	15.20	14.00	PU	PUE-300
E10082S402	101.60	82.55	18.00	16.48	HNBR	SUE-1233
E100831001	101.60	83.36	7.62	7.10	NBR	SUE-1148
E10085L502	101.60	85.72	10.50	9.52	PU	PUE-362
E10085D703	101.60	85.72	12.50	11.68	HNBR	SUE-1442
E100856603	101.60	85.72	12.50	11.70	FKM	SUE-684
E10085D701	101.60	85.72	12.50	11.70	HNBR	SUE-699
E10085L403	101.60	85.72	12.50	11.70	PU	PUE-345
E10085L401	101.60	85.72	12.50	11.70	PU	PUE-290
E100856702	101.60	85.72	13.00	11.80	FKM	SUE-577
E10085S403	101.60	85.72	13.50	12.30	HNBR	SUE-972
E10085L506	101.60	85.73	8.73	7.94	PU	PUE-602
E10085L504	101.60	85.73	13.97	12.70	PU	PUE-603
E10085L505	101.60	85.73	17.47	15.88	PU	PUE-604
E100886704	101.60	88.90	8.73	7.93	FKM	SUE-1090
E10088L503	101.60	88.90	10.50	9.52	PU	PUE-441
E100885901	101.60	88.90	10.50	9.52	PU	PUE-158
E100886702	101.60	88.90	10.50	9.52	FKM	SUE-484
E100882301	101.60	88.90	10.50	9.52	CR	SUE-669
E10088S401	101.60	88.90	10.50	9.52	HNBR	SUE-799
E10088L506	101.60	88.90	10.50	9.53	PU	PUE-611
E10088L507	101.60	88.90	13.97	12.70	PU	PUE-605
E100896702	101.60	89.00	7.20	6.50	FKM	SUE-1147
E10092D701	101.60	92.07	10.50	9.50	HNBR	SUE-697
E100926801	101.60	92.07	10.50	9.52	FKM	SUE-921
E10085L514	102.00	85.00	10.00	9.00	PU	PUE-706
E10090S402	103.20	90.50	9.50	8.50	HNBR	SUE-761

Part No.	D (H10)	d (f8/h9)	L (+0.2)	H	Material	Mould No.
E100956803	104.77	95.25	10.50	9.52	FKM	SUE-926
E10095D602	104.77	95.25	10.50	9.52	HNBR	SUE-819
E10085L518	104.78	85.73	17.47	15.88	PU	PUE-737
E10088L515	104.78	88.90	8.73	7.94	PU	PUE-738
E10088L508	104.78	88.90	10.50	9.53	PU	PUE-609
E10088L509	104.78	88.90	13.97	12.70	PU	PUE-610
E10092L501	104.78	92.08	6.98	6.35	PU	PUE-620
E10092L502	104.78	92.08	10.50	9.53	PU	PUE-619
E100956704	104.78	95.25	10.50	9.49	FKM	SUE-1234
E100856704	105.00	85.00	14.30	13.00	FKM	SUE-663
E10090L502	105.00	90.00	6.50	6.00	PU	PUE-648
E10090L503	105.00	90.00	10.00	9.00	PU	PUE-671
E100906707	105.00	90.00	10.00	9.00	FKM	SUE-951
E100906708	105.00	90.00	10.00	9.00	FKM	SUE-1089
E10090L509	105.00	90.00	10.00	9.00	PU	PUE-714
E100906705	105.00	90.00	10.00	9.20	FKM	SUE-1139
E100901103	105.00	90.00	10.50	9.50	NBR	SUE-746
E10090L510	105.00	90.00	11.00	10.00	PU	PUE-721
E100906704	105.00	90.00	12.50	11.40	FKM	SUE-465
E10090L511	105.00	90.00	12.50	11.40	PU	PUE-708
E100906602	105.00	90.00	14.70	13.50	FKM	SUE-1013
E100906601	105.00	90.00	16.50	15.50	FKM	SUE-984
E100906703	106.00	90.00	12.50	11.50	FKM	SUE-864
E100966801	106.35	96.82	10.50	9.52	FKM	SUE-927
E10096D601	106.35	96.82	10.50	9.52	HNBR	SUE-820
E10090S401	106.37	90.50	18.00	16.50	HNBR	SUE-760
E10082L507	107.95	82.55	13.97	12.70	PU	PUE-606
E10088L510	107.95	88.90	13.97	12.70	PU	PUE-608
E10088L502	107.95	88.90	17.47	15.75	PU	PUE-306
E10088K302	107.95	88.90	17.47	15.87	HYTREL	PUE-487
E10088S402	107.95	88.90	17.47	15.87	HNBR	SUE-1324
E10088L511	107.95	88.90	17.47	15.88	PU	PUE-622
E10088K301	107.95	88.90	26.50	24.13	HYTREL	PPA-1730
E10092C401	107.95	92.07	13.97	12.70	XNBR	SUE-964
E10092L505	107.95	92.08	8.73	7.94	PU	PUE-740
E10092L506	107.95	92.08	13.97	12.70	PU	PUE-732
E10095C401	107.95	95.25	10.50	9.52	XNBR	SUE-1376
E100957901	107.95	95.25	10.50	9.52	HYTREL	PUE-577
E10095D601	107.95	95.25	10.50	9.52	HNBR	SUE-739
E100956802	107.95	95.25	10.50	9.52	FKM	SUE-922
E10095L502	107.95	95.25	13.97	12.70	PU	PUE-616
E10095L508	107.95	95.25	15.50	14.30	PU	PUE-733
E100986801	107.95	98.42	10.50	9.52	FKM	SUE-923
E10098D701	107.95	98.42	10.50	9.52	HNBR	SUE-696
E10098L501	107.95	98.43	5.25	4.76	PU	PUE-730
E100986704	107.95	98.43	10.50	9.49	FKM	SUE-1235
E10098L502	107.95	98.43	10.50	9.53	PU	PUE-729
E10100L503	108.00	100.00	7.20	6.50	PU	PUE-686
E100881101	109.50	88.90	13.97	12.70	NBR	SUE-153
E10096L401	109.55	96.85	14.70	13.40	PU	PUE-344
E10096S401	109.55	96.85	14.70	13.50	HNBR	SUE-756
E10095L505	110.00	95.00	10.00	9.00	PU	PUE-707

Bold sizes are readily available in stock.
Other materials are available on request.

E10

Single Acting Symmetrical Seal

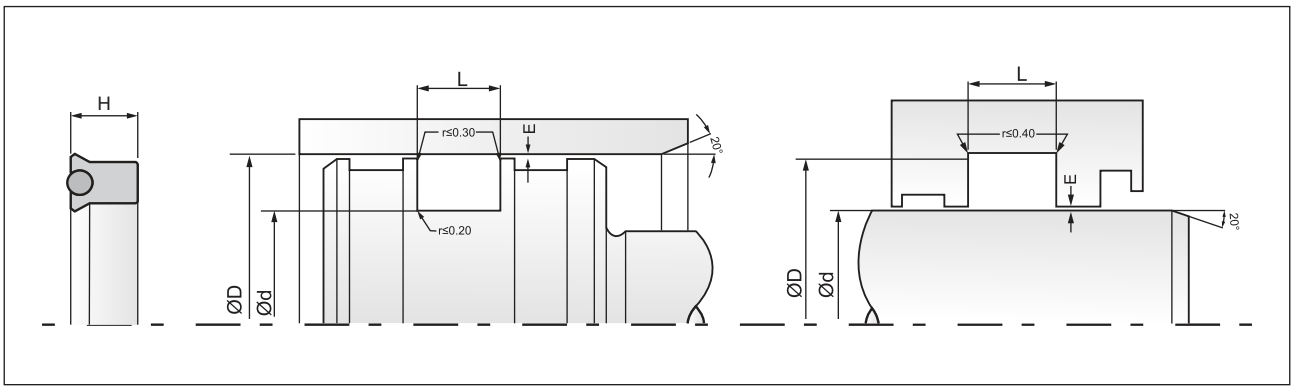

Part No.	D (H10)	d (f8/h9)	L (+0.2)	H	Material	Mould No.
E10095L506	110.00	95.00	11.00	10.00	PU	PUE-713
E10095L507	110.00	95.00	13.00	12.00	PU	PUE-712
E100970901	110.00	97.00	10.70	9.80	NBR	SUE-1336
E10092D702	111.12	92.07	17.47	15.87	HNBR	SUE-1009
E100988601	111.12	98.42	11.23	10.23	FKM/FABRIC	SUE-753
E100986702	111.12	98.42	15.50	14.30	FKM	SUE-693
E10098L403	111.12	98.42	15.50	14.30	PU	PUE-295
E100986702	111.12	98.42	15.50	14.30	FKM	SUE-580
E101017901	111.12	101.60	10.50	9.52	HYTREL	PUE-315
E10101S402	111.12	101.60	10.50	9.52	HNBR	SUE-866
E10101S404	111.12	101.60	10.50	9.52	HNBR	SUE-1422
E10092L503	111.13	92.08	10.50	9.53	PU	PUE-618
E10092L504	111.13	92.08	17.47	15.88	PU	PUE-617
E10095L509	111.13	95.25	10.50	9.53	PU	PUE-734
E10095L510	111.13	95.25	13.97	12.70	PU	PUE-735
E100986703	111.19	98.30	15.50	14.30	FKM	SUE-1071
E10103S402	112.71	103.18	10.50	9.52	HNBR	SUE-816
E101046702	114.19	104.67	12.50	11.70	FKM	SUE-1021
E10082L508	114.30	82.55	17.47	15.88	PU	PUE-601
E10088L512	114.30	88.90	13.97	12.70	PU	PUE-607
E10088L518	114.30	88.90	17.47	15.88	PU	PUE-743
E10088L513	114.30	88.90	20.95	19.05	PU	PUE-621
E10095L503	114.30	95.25	13.97	12.70	PU	PUE-615
E10095S401	114.30	95.25	17.47	15.87	HNBR	SUE-1355
E10095L504	114.30	95.25	17.47	15.88	PU	PUE-614
E100981103	114.30	98.40	9.20	8.20	NBR	SUE-891
E100981102	114.30	98.42	9.20	8.20	NBR	SUE-871
E10098L503	114.30	98.43	13.97	12.70	PU	PUE-728
E10101L508	114.30	101.60	6.98	6.35	PU	PUE-702
E10101L502	114.30	101.60	10.50	9.52	PU	PUE-461
E10101S401	114.30	101.60	10.50	9.52	HNBR	SUE-800
E10101509	114.30	101.60	10.50	9.53	PU	PUE-725
E10101L506	114.30	101.60	13.97	12.70	PU	PUE-628
E101011001	114.30	101.60	15.20	14.00	NBR	SUE-1331
E10101S403	114.30	101.60	15.50	14.28	HNBR	SUE-1375
E10101L510	114.30	101.60	15.50	14.30	PU	PUE-724
E10101L501	114.30	101.60	17.47	15.87	PU	PUE-442
E101046703	114.30	104.78	10.50	9.49	FKM	SUE-1236
E10104L504	114.30	104.78	10.50	9.53	PU	PUE-742
E100956703	115.00	95.00	11.00	10.00	FKM	SUE-1138
E10100L504	115.00	100.00	10.00	9.00	PU	PUE-704
E101006706	115.00	100.00	11.00	10.00	FKM	SUE-1087
E10100L505	115.00	100.00	11.00	10.00	PU	PUE-703
E10100L506	115.00	100.00	13.00	12.00	PU	PUE-705
E101006707	115.00	100.00	13.00	12.00	FKM	SUE-1088
E10103S401	115.87	103.17	10.50	9.52	HNBR	SUE-783
E101016702	116.28	101.60	17.60	16.00	FKM	SUE-912
E10106705	117.47	101.60	15.50	14.27	FKM	SUE-1278
E101016703	117.47	101.60	15.70	14.40	FKM	SUE-913
E10104K301	117.47	104.77	15.50	14.28	HYT-2	PUE-317
E101076705	117.47	107.95	5.25	4.76	FKM	SUE-732
E101076704	117.47	107.95	10.50	9.52	FKM	SUE-728

Part No.	D (H10)	d (f8/h9)	L (+0.2)	H	Material	Mould No.
E10098L504	117.48	98.43	10.50	9.53	PU	PUE-727
E10101L511	117.48	101.60	8.73	7.94	PU	PUE-726
E10101L507	117.48	101.60	15.50	14.30	PU	PUE-623
E10104L503	117.48	104.78	10.50	9.53	PU	PUE-626
E10090L504	120.00	90.00	14.30	13.00	PU	PUE-689
E10100L507	120.00	100.00	11.00	10.00	PU	PUE-720
E101006702	120.00	100.00	11.00	10.00	FKM	SUE-628
E101006603	120.00	100.00	13.00	12.00	FKM	SUE-1002
E10100L502	120.00	100.00	13.00	12.00	PU	PUE-595
E10100L508	120.00	100.00	13.00	12.00	PU	PUE-719
E101001002	120.00	100.00	13.00	12.00	NBR	SUE-1420
E101006602	120.00	100.00	15.20	14.00	FKM	SUE-664
E10100L509	120.00	100.00	16.00	15.00	PU	PUE-718
E10105L502	120.00	105.00	10.00	9.00	PU	PUE-717
E101051001	120.00	105.00	10.00	9.00	NBR	SUE-1201
E10105L503	120.00	105.00	13.00	12.00	PU	PUE-716
E10110505	120.00	110.00	13.00	12.00	PU	PUE-715
E10088L517	120.65	88.90	17.47	15.88	PU	PUE-736
E10101L503	120.65	101.60	10.50	9.53	PU	PUE-624
E10101L512	120.65	101.60	13.97	12.70	PU	PUE-723
E10101L504	120.65	101.60	15.50	14.30	PU	PUE-625
E10101D701	120.65	101.60	17.47	15.87	HNBR	SUE-1130
E10104L501	120.65	104.77	13.97	12.70	PU	PUE-563
E10107S401	120.65	107.95	9.50	8.50	HNBR	SUE-758
E10107S402	120.65	107.95	10.50	9.52	HNBR	SUE-1440
E10107L504	120.65	107.95	15.50	14.27	PU	PUE-539
E101116703	120.65	111.12	5.25	4.76	FKM	SUE-733
E10111S401	120.65	111.12	9.50	8.50	HNBR	SUE-792
E101116702	120.65	111.12	10.50	9.52	FKM	SUE-729
E10114D402	120.65	114.30	5.25	4.76	HNBR	SUE-1012
E101116704	121.41	111.80	18.00	16.50	FKM	SUE-986
E10104L402	123.82	104.77	13.00	11.80	PU	PUE-446
E101046701	123.82	104.77	13.00	11.80	FKM	SUE-695
E10104D701	123.82	104.77	13.00	11.80	HNBR	SUE-705
E101046802	123.82	104.77	13.00	11.80	FKM	SUE-813
E10104L401	123.82	104.77	13.00	11.80	PU	PUE-294
E101046701	123.82	104.77	13.00	11.80	FKM	SUE-582
E101076603	123.82	107.95	18.00	16.50	FKM	SUE-686
E10107L401	123.82	107.95	18.00	16.50	PU	PUE-291
E101076703	123.82	107.95	18.20	16.60	FKM	SUE-578
E10107L507	123.83	107.95	15.50	14.30	PU	PUE-612
E10111L504	123.83	111.13	6.98	6.35	PU	PUE-731
E10111L502	123.83	111.13	10.50	9.53	PU	PUE-627
E101001106	125.00	100.00	14.30	13.00	NBR	SUE-826
E101006705	125.00	100.00	14.30	13.00	FKM	SUE-1032
E10105L501	125.00	105.00	11.00	10.00	PU	PUE-196
E10105V301	125.00	105.00	11.00	10.00	NBR	SUE-1053
E101096601	125.00	109.00	22.00	20.00	FKM	SUE-911
E10110L401	125.00	110.00	5.50	5.00	PU	PUE-460
E10110L503	125.00	110.00	10.00	9.00	PU	PUE-530
E10110L506	125.00	110.00	10.00	9.00	PU	PUE-709
E101106704	125.00	110.00	10.00	9.00	FKM	SUE-1352

Bold sizes are readily available in stock.
Other materials are available on request.

E10

Single Acting Symmetrical Seal

MAX SPARE LIMITED
QUALITY. PRECISION. SPEED.

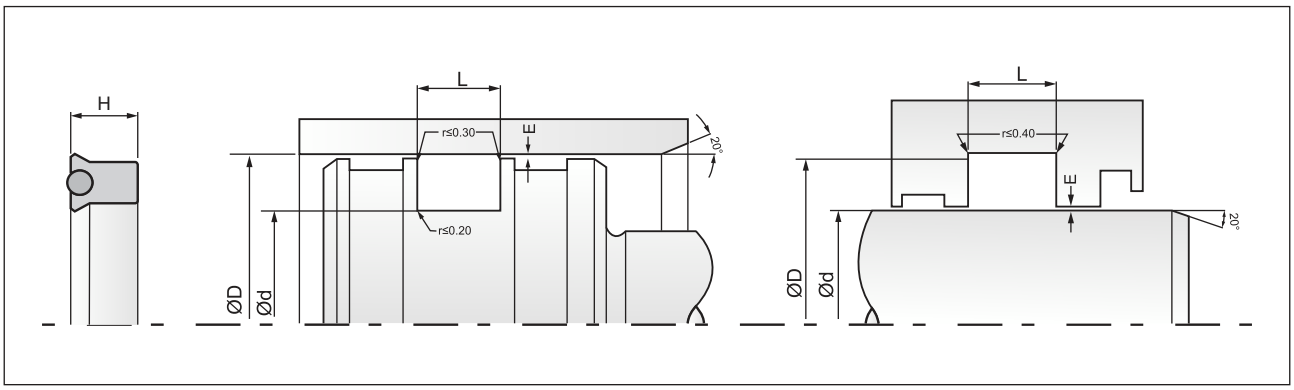

Part No.	D (H10)	d (f8/h9)	L (+0.2)	H	Material	Mould No.
E10110L507	125.00	110.00	13.00	12.00	PU	PUE-722
E10110L501	125.00	110.00	15.20	14.00	PU	PUE-127
E101106703	125.00	110.00	16.00	15.00	FKM	SUE-539
E10115L501	125.00	115.00	9.00	8.00	PU	PUE-710
E10115L502	125.00	115.00	16.00	15.00	PU	PUE-711
E10109D701	125.41	109.55	18.00	16.50	HNBR	SUF-620
E100851002	127.00	85.00	11.00	10.00	NBR	SUF-666
E10101L505	127.00	101.60	13.97	12.70	PU	PUF-453
E101016704	127.00	101.60	14.30	13.00	FKM	SUF-884
E10102L501	127.00	102.50	17.60	16.00	PU	PUF-322
E10104L502	127.00	104.78	17.47	15.88	PU	PUF-452
E101076702	127.00	107.95	10.50	9.52	FKM	SUF-214
E101076707	127.00	107.95	10.50	9.52	FKM	SUF-762
E10107L502	127.00	107.95	10.50	9.52	PU	PUF-285
E10107L505	127.00	107.95	13.97	12.70	PU	PUF-455
E10107L503	127.00	107.95	13.97	12.70	PU	PUF-286
E10107D601	127.00	107.95	17.47	15.87	HNBR	SUF-480
E101076706	127.00	107.95	17.47	15.87	FKM	SUF-763
E10107L506	127.00	107.95	17.47	15.88	PU	PUF-454
E101071004	127.00	107.96	15.70	14.50	NBR	SUF-645
E101086701	127.00	108.00	10.50	9.50	FKM	SUF-143
E10111L501	127.00	111.12	10.50	9.52	PU	PUF-323
E10111S403	127.00	111.12	12.50	11.50	HNBR	SUF-672
E10111D702	127.00	111.12	12.50	11.70	HNBR	SUF-507
E10111C401	127.00	111.12	15.50	14.27	XNBR	SUF-958
E10111D709	127.00	111.12	18.00	16.45	HNBR	SUF-1011
E10111D701	127.00	111.12	18.00	16.50	HNBR	SUF-508
E10111L401	127.00	111.12	18.00	16.50	PU	PUF-275
E10111S402	127.00	111.12	19.00	17.00	HNBR	SUF-676
E10111L503	127.00	111.13	17.47	15.88	PU	PUF-450
E101116602	127.00	111.50	8.00	7.50	FKM	SUF-882
E101126701	127.00	112.70	6.63	7.13	FKM	SUF-1005
E10114L508	127.00	114.30	6.98	6.35	PU	PUF-529
E10114C401	127.00	114.30	10.50	9.52	XNBR	SUF-974
E10114S404	127.00	114.30	10.50	9.52	HNBR	SUF-918
E101141001	127.00	114.30	10.50	9.52	NBR	SUF-353
E10114S403	127.00	114.30	10.50	9.52	HNBR	SUF-870
E101145901	127.00	114.30	10.50	9.52	PU	PUF-119
E10114L503	127.00	114.30	10.50	9.53	PU	PUF-449
E10114L504	127.00	114.30	13.97	12.70	PU	PUF-451
E101146802	127.00	114.30	15.50	14.28	FKM	SUF-642
E10114D701	127.00	114.30	15.50	14.28	HNBR	SUF-625
E10114L505	127.00	114.30	15.50	14.30	PU	PUF-463
E10114L509	127.00	114.30	17.47	15.88	PU	PUF-530
E10111L402	127.38	111.52	18.30	16.70	PU	PUF-329
E101186702	128.52	118.99	18.00	16.50	FKM	SUF-744
E10110L508	130.00	110.00	11.00	10.00	PU	PUF-518
E10110L509	130.00	110.00	13.00	12.00	PU	PUF-519
E101106401	130.00	110.00	13.50	12.40	FKM	SUF-1013
E10110L510	130.00	110.00	16.00	15.00	PU	PUF-520
E10125L401	130.00	125.00	9.50	8.50	PU	PUF-411
E10117D701	130.17	117.47	10.50	9.52	HNBR	SUF-529

Part No.	D (H10)	d (f8/h9)	L (+0.2)	H	Material	Mould No.
E10114L510	130.18	114.30	13.97	12.70	PU	PUF-531
E101176801	130.47	117.47	10.50	9.52	FKM	SUF-636
E10115S401	130.96	115.08	18.00	16.50	HNBR	SUF-540
E101196601	132.08	119.38	15.50	14.30	FKM	SUF-784
E10120D704	133.09	120.34	15.50	14.28	HNBR	SUF-857
E10123D702	133.09	123.62	10.50	9.52	HNBR	SUF-858
E101246701	133.25	124.83	10.50	9.52	FKM	SUF-686
E10117D702	133.31	117.47	17.47	15.87	HNBR	SUF-663
E10101O501	133.35	101.60	27.50	25.70	HYTREL	PUF-558
E10107L508	133.35	107.95	13.97	12.70	PU	PUF-526
E10107L509	133.35	107.95	20.95	19.05	PU	PUF-528
E10107K301	133.35	107.95	20.95	19.05	HYT	PUF-414
E10114S401	133.35	114.30	17.47	15.87	HNBR	SUF-568
E10114L506	133.35	114.30	17.47	15.88	PU	PUF-464
E10117L501	133.35	117.48	17.47	15.88	PU	PUF-461
E10120C401	133.35	120.65	6.98	6.35	XNBR	SUF-848
E101206702	133.35	120.65	7.40	6.80	FKM	SUF-640
E101206802	133.35	120.65	10.50	9.52	FKM	SUF-637
E10120D602	133.35	120.65	10.50	9.52	HNBR	SUF-528
E10120L501	133.35	120.65	10.50	9.53	PU	PUF-429
E10120C402	133.35	120.65	15.50	14.27	XNBR	SUF-850
E10120S403	133.35	120.65	15.50	14.27	HNBR	SUF-736
E10120D703	133.35	120.65	15.50	14.27	HNBR	SUF-664
E10120D703	133.35	120.65	15.50	14.27	HNBR	SIF-745
E10120L502	133.35	120.65	15.50	14.30	PU	PUF-460
E101206703	133.50	120.00	7.62	7.00	FKM	SUF-853
E10120L507	135.00	120.00	10.00	9.00	PU	PUF-521
E10120L508	135.00	120.00	13.00	12.00	PU	PUF-522
E101251001	135.00	125.00	12.50	11.40	NBR	SUF-701
E101266801	135.22	126.28	12.50	11.67	FKM	SUF-913
E101176701	136.52	117.47	17.47	15.87	FKM	SUF-802
E10120S401	136.52	120.65	18.20	16..5	HNBR	SUF-541
E101236705	136.52	123.82	6.98	6.35	FKM	SUF-840
E101236703	136.52	123.82	15.50	14.28	FKM	SUF-823
E10120L511	136.53	120.65	17.47	15.88	PU	PUF-532
E101236706	136.53	123.83	16.00	14.72	FKM	SUF-867
E10127L504	136.53	127.00	8.73	7.94	PU	PUF-456
E10127L512	136.53	127.00	10.50	9.53	PU	PUF-533
E101186701	137.31	118.26	17.47	15.87	FKM	SUF-634
E10122D701	138.12	122.25	18.00	16.50	HNBR	SUF-603
E10125D701	138.43	125.73	15.50	14.28	HNBR	SUF-880
E10120D702	139.69	120.65	17.47	15.87	HNBR	SUF-665
E10114L507	139.70	114.30	13.97	12.70	PU	PUF-465
E10114L511	139.70	114.30	20.95	19.05	PU	PUF-527
E101146702	139.70	114.30	20.95	19.05	FKM	SUF-987
E10120L503	139.70	120.65	13.97	12.70	PU	PUF-458
E10120D601	139.70	120.65	17.47	15.87	HNBR	SUF-481
E10120L504	139.70	120.65	17.47	15.88	PU	PUF-459
E101236702	139.70	123.74	19.00	17.00	FKM	SUF-687
E101236601	139.70	123.82	18.00	16.50	FKM	SUF-502
E10123401	139.70	123.82	18.00	16.50	PU	PUF-230
E101236701	139.70	123.82	18.20	16.60	FKM	SUF-447

Bold sizes are readily available in stock.
Other materials are available on request.

E10

Single Acting Symmetrical Seal

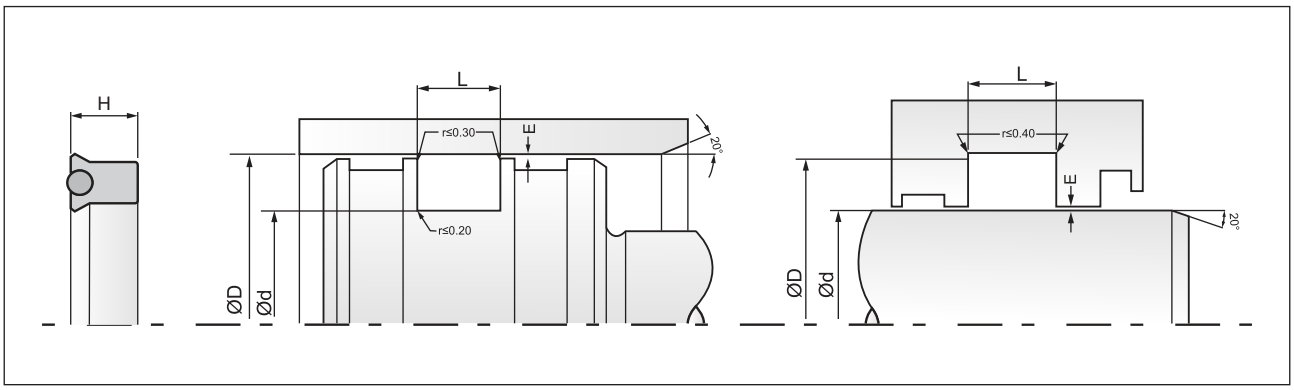

Part No.	D (H10)	d (f8/h9)	L (+0.2)	H	Material	Mould No.
E10127L505	139.70	127.00	6.98	6.35	PU	PUF-466
E10127D703	139.70	127.00	10.50	9.52	HNBR	SUF-817
E10127S403	139.70	127.00	10.50	9.52	HNBR	SUF-745
E10127L506	139.70	127.00	10.50	9.53	PU	PUF-467
E10127L507	139.70	127.00	13.97	12.70	PU	PUF-468
E101276705	139.70	127.00	15.50	14.28	FKM	SUF-937
E10127L508	139.70	127.00	15.50	14.30	PU	PUF-469
E101276704	139.70	127.00	16.00	14.72	FKM	SUF-868
E10127L502	139.70	127.00	17.47	15.87	PU	PUF-352
E101276703	139.70	127.00	17.47	15.87	FKM	SUF-498
E10120L509	140.00	120.00	13.00	12.00	PU	PUF-523
E10120L510	140.00	120.00	16.00	15.00	PU	PUF-524
E101206701	140.00	120.00	16.00	15.00	FKM	SUF-428
E101256701	140.00	125.00	10.00	9.00	FKM	SUF-631
E10125L502	140.00	125.00	10.00	9.00	PU	PUF-525
E10125L503	140.00	125.00	13.00	12.00	PU	PUF-515
E10125L504	140.00	125.00	16.00	15.00	PU	PUF-517
E10125L501	140.00	125.00	16.00	15.00	PU	PUF-494
E10126D601	140.69	126.00	7.20	6.50	HNBR	SUF-806
E10122S401	141.30	122.25	12.50	11.70	HNBR	SUF-542
E101226701	141.30	122.25	13.00	11.80	FKM	SUF-457
E101177901	142.87	117.47	20.95	19.05	HYTREL	PUF-534
E10127D703	142.87	127.00	18.00	16.45	HNBR	SUF-1012
E10127D701	142.87	127.00	18.00	16.50	HNBR	SUF-510
E10127L401	142.87	127.00	18.00	16.50	PU	PUF-277
E101306602	142.87	130.17	6.98	6.35	VMQ	SUF-893
E101306801	142.87	130.17	15.50	14.28	FKM	SUF-638
E10130D701	142.87	130.17	15.50	14.28	HNBR	SUF-530
E10127S401	142.88	127.00	19.00	17.00	HNBR	SUF-671
E10130S401	142.88	130.18	6.98	6.35	HNBR	SUF-939
E101256703	145.00	125.00	13.50	12.50	FKM	SUF-685
E101256702	145.00	125.00	14.30	13.00	FKM	SUF-644
E101258701	145.00	125.00	15.70	14.50	PU	PUF-283
E10130L501	145.00	130.00	10.00	9.00	PU	PUF-516
E10130L502	145.00	130.00	13.00	12.00	PU	PUF-513
E10120L505	146.05	120.65	13.97	12.70	PU	PUF-462
E101271105	146.05	127.00	8.73	7.93	NBR	SUF-800
E10127L503	146.05	127.00	10.50	9.52	PU	PUF-417
E10127L509	146.05	127.00	10.50	9.53	PU	PUF-470
E101276701	146.05	127.00	17.47	15.87	FKM	SUF-221
E10127L510	146.05	127.00	17.47	15.88	PU	PUF-457
E10133C401	146.05	133.35	15.50	14.27	XNBR	SUF-849
E10133S401	149.22	133.35	17.47	15.87	HNBR	SUF-600
E101406701	149.93	140.41	18.00	16.50	FKM	SUF-706
E101256704	150.00	125.00	15.20	14.00	FKM	SUF-959
E10130L503	150.00	130.00	16.00	15.00	PU	PUF-514
E101306301	150.00	130.00	16.00	15.00	FKM	SUF-368
E10135L505	150.00	135.00	10.00	9.00	PU	PUF-512
E10135L504	150.00	135.00	13.00	12.00	PU	PUF-511
E101400801	150.00	140.00	12.50	11.40	PU	PUF-382
E101401103	150.00	140.00	12.50	11.40	NBR	SUF-769
E10135D702	151.20	135.35	9.00	8.00	HNBR	SUG-716

Part No.	D (H10)	d (f8/h9)	L (+0.2)	H	Material	Mould No.
E10135S401	152.00	135.00	9.50	8.50	HNBR	SUG-887
E10120L506	152.40	120.65	17.47	15.88	PU	PUG-362
E10127L501	152.40	127.00	13.97	12.70	PU	PUG-234
E101271102	152.40	127.00	20.24	18.24	NBR	SUG-415
E10127L511	152.40	127.00	20.95	19.05	PU	PUG-379
E101331001	152.40	133.35	10.50	9.52	NBR	SUG-521
E10133L506	152.40	133.35	10.50	9.53	PU	PUG-423
E101336705	152.40	133.35	13.97	12.70	FKM	SUG-649
E10133L507	152.40	133.35	13.97	12.70	PU	PUG-428
E10133L503	152.40	133.35	15.50	14.28	PU	PUG-284
E10133L504	152.40	133.35	17.47	15.87	PU	PUG-152
E10133S402	152.40	133.35	17.47	15.87	HNBR	SUG-837
E10133L508	152.40	133.35	17.47	15.88	PU	PUG-427
E10133L401	152.40	133.35	18.20	16.60	PU	PUG-185
E101336704	152.40	133.35	18.20	16.60	FKM	SUG-446
E101336704	152.40	133.35	18.20	16.60	FKM	SUG-399
E10136L501	152.40	136.53	10.50	9.53	PU	PUG-426
E10136L502	152.40	136.53	17.47	15.88	PU	PUG-425
E10139L512	152.40	139.70	6.50	6.00	PU	PUG-402
E10139K301	152.40	139.70	6.98	6.35	HYTREL	PUG-382
E10139L503	152.40	139.70	6.98	6.35	PU	PUG-378
E10139D702	152.40	139.70	6.98	6.35	HNBR	SUG-765
E10139D703	152.40	139.70	10.50	9.52	HNBR	SUG-766
E10139L511	152.40	139.70	10.50	9.52	PU	PUG-383
E10139K302	152.40	139.70	10.50	9.52	HYTREL	PUG-381
E10139D701	152.40	139.70	10.50	9.52	HNBR	SUG-709
E10139L501	152.40	139.70	10.50	9.52	PU	PUG-189
E101391002	152.40	139.70	10.50	9.52	NBR	SUG-346
E10139L504	152.40	139.70	10.50	9.53	PU	PUG-377
E101396702	152.40	139.70	13.97	12.70	FKM	SUG-710
E10139C402	152.40	139.70	13.97	12.70	XNBR	SUG-729
E10139C401	152.40	139.70	13.97	12.70	XNBR	SUG-700
E101396702	152.40	139.70	13.97	12.70	FKM	SUG-730
E10139L505	152.40	139.70	13.97	12.70	PU	PUG-376
E10139S401	152.40	139.70	15.50	14.27	HNBR	SUG-523
E10139C404	152.40	139.70	15.50	14.28	XNBR	SUG-855
E10139L506	152.40	139.70	15.50	14.30	PU	PUG-374
E10139L507	152.40	139.70	17.47	15.88	PU	PUG-365
E10135D701	154.78	135.74	18.00	16.40	HNBR	SUG-542
E10140L503	155.00	140.00	10.00	9.00	PU	PUG-418
E10140L504	155.00	140.00	13.00	12.00	PU	PUG-417
E101366804	155.57	136.52	13.00	11.80	FKM	SUG-501
E10136D702	155.57	136.52	13.00	11.80	HNBR	SUG-454
E10146S401	155.57	145.05	10.50	9.52	HNBR	SUG-512
E10136L503	155.58	136.53	10.50	9.53	PU	PUG-424
E10136L504	155.58	136.53	17.47	15.88	PU	PUG-439
E10139L513	155.58	139.70	8.73	7.94	PU	PUG-440
E10139L514	155.58	139.70	17.47	15.88	PU	PUG-441
E10142L501	155.58	142.88	6.98	6.35	PU	PUG-429
E101366803	155.60	136.52	18.20	16.60	FKM	SUG-502
E10136D701	155.60	136.52	18.30	16.70	HNBR	SUG-455
E10136L401	155.60	136.52	18.30	16.70	PU	PUG-222

Bold sizes are readily available in stock.
Other materials are available on request.

E10

Single Acting Symmetrical Seal

MAX SPARE LIMITED
QUALITY. PRECISION. SPEED.

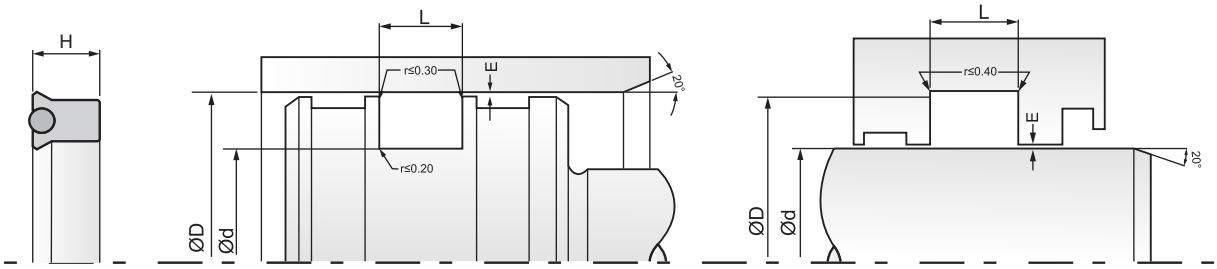

Part No.	D (H10)	d (f8/h9)	L (+0.2)	H	Material	Mould No.
E10136L402	155.97	136.92	18.20	16.60	PU	PUG-256
E10147D702	157.10	147.57	10.50	9.52	HNBR	SUG-882
E10133L505	158.75	133.35	13.97	12.70	PU	PUG-380
E10139L508	158.75	139.70	10.50	9.53	PU	PUG-375
E10139C403	158.75	139.70	17.47	15.87	XNBR	SUG-807
E101396701	158.75	139.70	17.47	15.87	FKM	SUG-342
E10139D601	158.75	139.70	17.47	15.87	HNBR	SUG-428
E10139L509	158.75	139.70	17.47	15.88	PU	PUG-357
E10142L502	158.75	142.88	8.73	7.94	PU	PUG-438
E10146L504	158.75	146.05	6.98	6.35	PU	PUG-359
E10146L509	158.75	146.05	6.98	6.35	PU	PUG-387
E10146C401	158.75	146.05	10.50	9.52	XNBR	SUG-856
E10146S403	158.75	146.05	10.50	9.52	HNBR	SUG-884
E10146L505	158.75	146.05	10.50	9.53	PU	PUG-363
E101461102	158.75	146.05	15.50	14.28	NBR	SUG-601
E10146S402	158.75	146.05	15.50	14.28	HNBR	SUG-644
E10146L506	158.75	146.05	15.50	14.30	PU	PUG-369
E10149S401	158.75	149.20	10.50	9.52	HNBR	SUG-514
E10140L505	160.00	140.00	16.00	15.00	PU	PUG-416
E10145L501	160.00	145.00	10.00	9.00	PU	PUG-415
E10145L502	160.00	145.00	13.00	12.00	PU	PUG-414
E10146D701	161.92	146.05	18.00	16.50	HNBR	SUG-492
E10149K301	161.92	149.22	6.98	6.35	HYT	PUG-328
E10149D702	161.92	149.22	15.50	14.28	HNBR	SUG-551
E101496801	161.92	149.22	15.50	14.28	FKM	SUG-566
E10149K302	161.92	149.22	15.50	14.30	HYTREL	PUG-461
E10147S401	163.52	147.65	18.00	16.50	HNBR	SUG-496
E10150L503	165.00	150.00	10.00	9.00	PU	PUG-413
E10150L504	165.00	150.00	16.00	15.00	PU	PUG-412
E10139L510	165.10	139.70	13.97	12.70	PU	PUG-358
E10139S403	165.10	139.70	20.95	19.05	HNBR	SUG-869
E10146L507	165.10	146.05	10.50	9.53	PU	PUG-367
E10146L510	165.10	146.05	17.47	15.88	PU	PUG-437
E10149L501	165.10	149.23	8.73	7.95	PU	PUG-436
E10152L503	165.10	152.40	6.98	6.35	PU	PUG-368
E10152L510	165.10	152.40	6.98	6.35	PU	PUG-388
E10152L504	165.10	152.40	10.50	9.53	PU	PUG-361
E10152D701	165.10	152.40	15.50	14.28	HNBR	SUG-552
E101526804	165.10	152.40	15.50	14.28	FKM	SUG-567
E10152C401	165.10	152.40	15.50	14.28	XNBR	SUG-854
E10152L505	165.10	152.40	15.50	14.30	PU	PUG-360
E101526603	165.10	152.40	20.50	18.50	FKM	SUG-660
E101576701	166.15	157.53	10.70	9.70	FKM	SUG-610
E101526703	168.22	152.34	18.00	16.50	FKM	SUG-611
E10149D701	168.27	149.22	18.20	16.60	HNBR	SUG-494
E10152D601	168.27	152.40	17.47	15.87	HNBR	SUG-390
E10149L52	168.28	149.23	10.50	9.53	PU	PUG-433
E10149L503	168.28	149.23	17.47	15.88	PU	PUG-434
E10152L511	168.28	152.40	8.73	7.94	PU	PUG-435
E10140L502	170.00	140.00	20.90	19.00	PU	PUG-400
E10150L505	170.00	150.00	16.00	15.00	PU	PUG-411
E10155L501	170.00	155.00	10.00	9.00	PU	PUG-419

Part No.	D (H10)	d (f8/h9)	L (+0.2)	H	Material	Mould No.
E101556602	170.00	155.00	10.00	9.00	FKM	SUG-641
E10152D702	171.44	152.40	17.47	15.80	HNBR	SUG-717
E10139L515	171.45	139.70	17.47	15.88	PU	PUG-432
E10146L508	171.45	146.05	13.97	12.70	PU	PUG-366
E10146L511	171.45	146.05	20.95	19.05	PU	PUG-430
E10152L512	171.45	152.40	10.50	9.53	PU	PUG-431
E10152L507	171.45	152.40	13.97	12.70	PU	PUG-372
E10152S401	171.45	152.40	17.47	15.87	HNBR	SUG-836
E10152L508	171.45	152.40	17.47	15.88	PU	PUG-371
E101526702	171.45	152.40	18.20	16.60	FKM	SUG-448
E10152L401	171.45	152.40	18.20	16.60	PU	PUG-188
E101526702	171.45	152.40	18.20	16.60	FKM	SUG-400
E10155L503	171.45	155.58	8.73	7.94	PU	PUG-442
E101586702	171.45	158.75	6.98	6.35	FKM	SUG-753
E10158L503	171.45	158.75	6.98	6.35	PU	PUG-370
E10158L504	171.45	158.75	10.50	9.53	PU	PUG-364
E101506601	171.70	150.80	17.47	15.87	FKM	SUG-561
E10155S401	172.00	155.00	17.60	16.00	HNBR	SUG-888
E10155L401	174.62	155.57	18.20	16.60	PU	PUG-224
E10155D701	174.62	155.57	18.20	16.60	HNBR	SUG-457
E101556802	174.62	155.57	18.20	16.60	FKM	SUG-503
E10158D701	174.62	158.75	17.47	15.87	HNBR	SUG-388
E10150L501	175.00	150.00	21.80	19.90	PU	PUG-258
E10155L502	175.00	155.00	16.00	15.00	PU	PUG-420
E10160L504	175.00	160.00	10.00	9.00	PU	PUG-421
E10160L505	175.00	160.00	13.00	12.00	PU	PUG-422
E10160L501	176.21	160.34	13.97	12.70	PU	PUH-197
E10152L509	177.80	152.40	13.97	12.70	PU	PUH-293
E10152L501	177.80	152.40	14.70	13.49	PU	PUH-204
E10158L505	177.80	158.75	10.50	9.53	PU	PUH-296
E10158L506	177.80	158.75	13.97	12.70	PU	PUH-289
E10158L501	177.80	158.75	15.50	14.28	PU	PUH-224
E10158S401	177.80	158.75	17.47	15.87	HNBR	SUH-544
E10158L507	177.80	158.75	17.47	15.88	PU	PUH-291
E10161L501	177.80	161.93	17.47	15.88	PU	PUH-333
E10165L503	177.80	165.10	6.98	6.35	PU	PUH-290
E10165L504	177.80	165.10	10.50	9.53	PU	PUH-292
E10165L501	177.80	165.10	13.97	12.70	PU	PUH-196
E10165D701	177.80	165.10	15.50	14.28	HNBR	SUH-373
E101656801	177.80	165.10	15.50	14.28	FKM	SUH-382
E101651102	177.80	165.10	15.50	14.28	NBR	SUH-252
E10165L505	177.80	165.10	15.50	14.30	PU	PUH-294
E10160L502	179.38	160.33	10.50	9.52	PU	PUH-198
E101606702	180.00	160.00	16.00	15.00	FKM	SUH-368
E10165L508	180.00	165.00	10.00	9.00	PU	PUH-322
E101616701	180.97	161.92	18.20	16.60	FKM	SUH-287
E10165L509	180.98	165.10	8.73	7.94	PU	PUH-332
E10165L510	180.98	165.10	17.47	15.88	PU	PUH-331
E10152L513	184.15	152.40	17.47	15.88	PU	PUH-334
E10158C401	184.15	158.75	20.95	19.05	XNBR	SUH-499
E10165L401	184.15	165.10	10.50	9.52	PU	PUH-260
E10165O501	184.15	165.10	10.50	9.52	HYTREL	PUH-306

Bold sizes are readily available in stock.
Other materials are available on request.

E10

Single Acting Symmetrical Seal

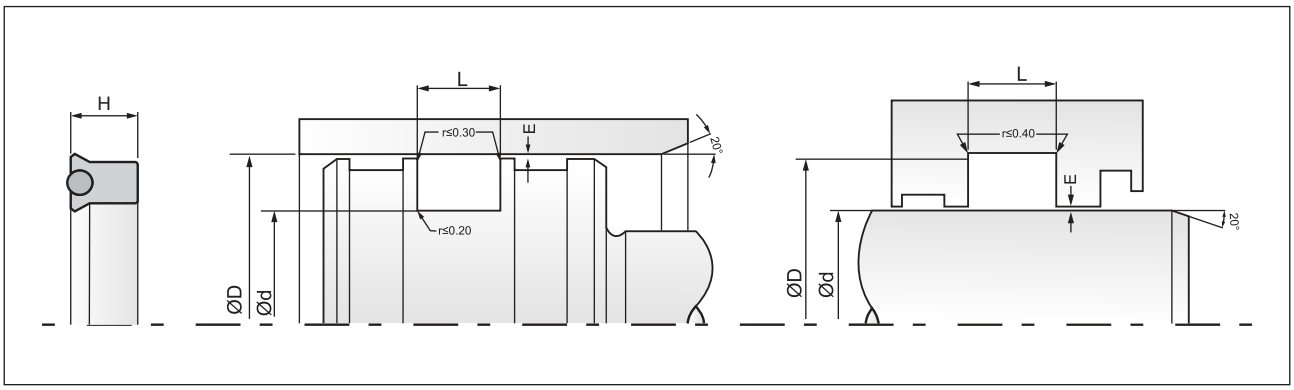

Part No.	D (H10)	d (f8/h9)	L (+0.2)	H	Material	Mould No.
E10165L506	184.15	165.10	13.97	12.70	PU	PUH-295
E10165L507	184.15	165.10	17.47	15.88	PU	PUH-286
E10165S401	184.15	165.10	18.00	16.50	HNBR	SUH-331
E10168L501	184.15	168.28	8.73	7.94	PU	PUH-330
E10171L504	184.15	171.45	6.98	6.35	PU	PUH-329
E10171S401	184.15	171.45	6.98	6.35	HNBR	SUH-502
E10171K301	184.15	171.45	6.98	6.35	HYT	PUH-262
E10171C401	184.15	171.45	15.50	14.27	XNBR	SUH-431
E10171L505	184.15	171.45	15.50	14.30	PU	PUH-328
E101717901	184.15	171.45	20.95	19.05	HYTREL	PUH-336
E10170L503	185.00	170.00	10.00	9.00	PU	PUH-323
E10160L503	190.00	160.00	20.90	19.00	PU	PUH-309
E10170L502	190.00	170.00	35.57	33.07	PU	PUH-254
E10165L511	190.50	165.10	17.47	15.88	PU	PUH-335
E10171L503	190.50	171.45	17.47	15.88	PU	PUH-285
E10177L505	190.50	177.80	15.50	14.30	PU	PUH-283
E101716701	190.70	171.66	11.00	10.00	FKM	SUH-511
E101708701	195.00	170.00	20.90	19.00	PU	PUH-154
E10171L506	196.85	171.45	20.95	19.05	PU	PUH-327
E10177L506	196.85	177.80	10.50	9.53	PU	PUH-284
E101770801	196.85	177.80	13.97	12.70	NBR	PUH-210
E10177L507	196.85	177.80	13.97	12.70	PU	PUH-287
E101771003	196.85	177.80	17.47	15.87	NBR	PUH-226
E10177L508	196.85	177.80	17.47	15.88	PU	PUH-288
E10184L506	196.85	184.15	6.98	6.35	PU	PUH-326
E101840801	196.85	184.15	6.98	6.35	NBR	PUH-209
E10184L501	196.85	184.15	6.98	6.35	PU	PUH-269
E101845402	196.85	184.15	15.50	14.27	HNBR	SUH-345
E10184C401	196.85	184.15	15.50	14.27	XNBR	SUH-432
E10184C401.	196.85	184.15	17.47	15.87	XNBR	SUH-532
E10187L501	196.85	187.32	10.50	9.52	PU	PUH-253
E101701001	200.00	170.00	26.50	24.00	NBR	SUH-451
E101806702	200.00	180.00	15.20	14.00	FKM	SUH-232
E10180L501	200.00	180.00	16.00	15.00	PU	PUH-324
E10185L501	200.00	185.00	10.00	9.00	PU	PUH-325
E10190L501	200.00	190.00	9.50	8.50	PU	PUH-278
E101806701	200.02	180.97	18.20	16.60	FKM	SUJ-249
E101818701	200.42	181.38	13.97	12.70	PU	PUJ-255
E10177L509	203.20	177.80	13.97	12.70	PU	PUJ-238
E10177L503	203.20	177.80	20.95	19.05	PU	PUJ-232
E10177J301	203.20	177.80	20.95	19.05	HYTREL	PUJ-256
E10184L503	203.20	184.15	10.50	9.53	PU	PUJ-236
E10184L504	203.20	184.15	13.97	12.70	PU	PUJ-237
E10184L505	203.20	184.15	17.47	15.88	PU	PUJ-245
E10184S401	203.20	184.15	18.00	16.50	HNBR	SUJ-280
E101851101	203.20	185.16	13.97	12.70	NBR	SUJ-3585
E10187L501.	203.20	187.33	8.73	7.94	PU	PUJ-275
E10190L503	203.20	190.50	6.98	6.35	PU	PUJ-239
E10190L504	203.20	190.50	10.50	9.53	PU	PUJ-240
E091901001	203.20	190.50	15.20	14.00	NBR	SUJ-414
E101901104	203.20	190.50	15.50	14.28	NBR	SUJ-370
E10190L505	203.20	190.50	15.50	14.30	PU	PUJ-241

Part No.	D (H10)	d (f8/h9)	L (+0.2)	H	Material	Mould No.
E101786601	204.00	178.50	10.00	9.00	FKM	SUJ-419
E10190CF01	204.00	190.00	8.00	7.50	PU	PUJ-266
E101717902	209.55	171.45	34.25	31.75	HYTREL	PUJ-276
E10190L506	209.55	190.50	10.50	9.53	PU	PUJ-242
E10190L507	209.55	190.50	13.97	12.70	PU	PUJ-243
E10196L503	209.55	196.85	6.98	6.35	PU	PUJ-234
E101966601	209.55	196.85	6.98	6.35	FKM	SUJ-396
E102036601	215.70	203.20	16.00	15.00	FKM	SUJ-425
E102031201	215.70	203.20	17.60	16.00	NBR	SUJ-437
E10190L508	215.90	190.50	13.97	12.70	PU	PUJ-244
E10190L509	215.90	190.50	20.95	19.05	PU	PUJ-274
E10196L504	215.90	196.85	10.50	9.53	PU	PUJ-273
E10196L505	215.90	196.85	13.97	12.70	PU	PUJ-272
E10196L506	215.90	196.85	17.47	15.88	PU	PUJ-271
E102036701	215.90	203.20	6.98	6.35	FKM	SUJ-392
E10203K301	215.90	203.20	7.62	6.98	HYT	PUJ-220
E10203L503	215.90	203.20	15.50	14.30	PU	PUJ-235
E10209L501	218.44	209.55	6.98	6.35	PU	PUJ-267
E10203L504	219.08	203.20	8.73	7.94	PU	PUJ-278
E10203L505	219.08	203.20	17.47	15.88	PU	PUJ-270
E10200L504	220.00	200.00	12.00	11.00	PU	PUJ-214
E102006601	220.00	200.00	13.00	12.00	FKM	SUJ-386
E10203L501	222.25	203.20	12.00	11.11	PU	PUJ-213
E10203L506	222.25	203.20	17.47	15.88	PU	PUJ-269
E10209L502	222.25	209.55	15.50	14.30	PU	PUJ-268
E10200L503	225.00	200.00	16.00	15.00	PU	PUJ-153
E10200L505	225.00	200.00	16.00	15.00	PU	PUJ-257
E101966801	228.60	196.85	17.47	15.87	FKM	SUK-263
E10203L507	228.60	203.20	13.97	12.70	PU	PUK-204
E10203L508	228.60	203.20	20.95	19.05	PU	PUK-203
E10209L503	228.60	209.55	10.50	9.53	PU	PUK-202
E10209L504	228.60	209.55	17.47	15.88	PU	PUK-201
E10215L501	228.60	215.90	15.50	14.30	PU	PUK-200
E102151001	234.90	215.90	17.47	15.87	PU	PUK-159
E102206701	236.50	220.00	19.00	17.00	FKM	SUK-319
E10200L506	240.00	200.00	22.00	20.00	PU	PUK-199
E10210L401	240.00	210.00	26.50	24.00	PU	PUK-132
E102246701	240.00	224.50	20.00	18.00	FKM	SUK-318
E10215L502	241.30	215.90	13.97	12.70	PU	PUK-211
E10215L503	241.30	218.90	20.95	19.05	PU	PUK-210
E10222L502	241.30	222.25	10.50	9.53	PU	PUK-209
E10222L503	241.30	222.25	17.47	15.88	PU	PUK-208
E102281101	241.30	228.60	10.50	9.52	NBR	SUK-266
E10228S401	241.30	228.60	10.50	9.52	HNBR	SUK-162
E102286602	241.50	228.60	15.70	14.60	FKM	SUK-295
E10222L504	247.65	222.25	13.97	12.70	PU	PUK-207
E10228L502	247.65	228.60	10.50	9.53	PU	PUK-206
E10228L503	247.65	228.60	17.47	15.88	PU	PUK-205
E102208701	250.00	220.00	24.50	22.70	PU	PUK-147
E10222L501	254.00	222.00	20.90	19.00	PU	PUM-155
E102226701	254.00	222.00	20.90	19.00	FKM	SUM-435
E10228L504	254.00	228.60	13.97	12.70	PU	PUM-400

Bold sizes are readily available in stock.
Other materials are available on request.

E10

Single Acting Symmetrical Seal

MAX SPARE LIMITED
QUALITY. PRECISION. SPEED.

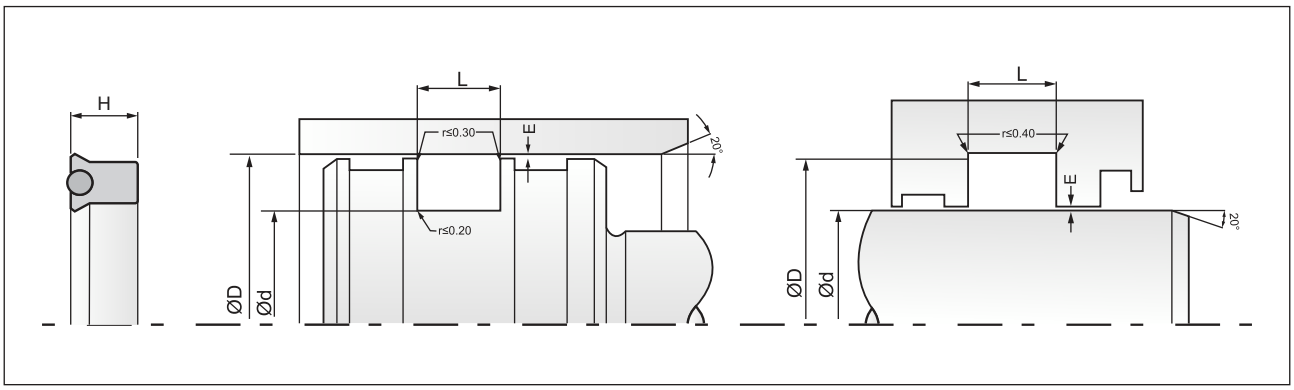

Part No.	D (H10)	d (f8/h9)	L (+0.2)	H	Material	Mould No.
E10228L505	254.00	228.60	20.95	19.05	PU	PUM-399
E102281001	254.00	228.60	20.95	19.05	NBR	SUM-162
E10228L501	254.00	228.60	20.95	19.05	PU	PUM-154
E102341001	254.00	234.95	10.50	9.52	NBR	SUM-129
E10234L501	254.00	234.95	10.50	9.52	PU	PUM-202
E10234L502	254.00	234.95	10.50	9.53	PU	PUM-398
E10234L503	254.00	234.95	13.97	12.70	PU	PUM-397
E10234L504	254.00	234.95	17.47	15.88	NBR	PUM-396
E10241L501	254.00	241.30	10.50	9.52	PU	PUM-203
E102416701	254.00	241.30	10.50	9.52	FKM	SUM-530
E1024L502	254.00	241.30	15.50	14.30	PU	PUM-395
E10236L501	255.00	236.10	17.60	16.00	PU	PUM-239
E102306601	260.00	230.00	19.50	17.50	FKM	SUM-670
E10230L501	260.00	230.00	20.90	19.00	PU	PUM-257
E102281003	260.35	228.60	25.00	22.82	NBR	SUM-440
E102280801	260.35	228.60	25.00	22.82	NBR	SUM-707
E10241L503	260.35	241.30	10.50	9.53	PU	PUM-394
E10241L504	260.35	241.30	17.47	15.88	PU	PUM-393
E10247L501	260.35	247.65	6.98	6.35	PU	PUM-392
E102476701	260.35	247.65	6.98	6.35	FKM	SUM-820
E10241L505	266.70	241.30	13.97	12.70	PU	PUM-391
E10247K301	266.70	247.65	13.97	12.70	HYTREL	PUM-378
E10247D701	266.70	247.65	17.47	15.87	HNBR	SUM-663
E10247L502	266.70	247.65	17.47	15.88	PU	PUM-390
E10254L504	266.70	254.00	15.50	14.27	PU	PUM-245
E10254L509	266.70	254.00	15.50	14.30	PU	PUM-389
E10254L505	266.70	254.00	16.50	15.24	PU	PUM-274
E102506701	270.00	250.00	13.50	12.50	FKM	SUM-611
E10254L506	273.05	254.00	10.50	9.53	PU	PUM-387
E10254L507	273.05	254.00	17.47	15.88	PU	PUM-386
E10260K301	273.05	260.35	6.98	6.35	HYT	PUM-286
E10250L502	275.00	250.00	20.00	18.00	PU	PUM-360
E10247L503	279.40	247.65	17.47	15.88	PU	PUM-388
E10254L502	279.40	254.00	14.30	13.00	PU	PUM-152
E10254L508	279.40	254.00	20.95	19.05	PU	PUM-385
E102601101	279.40	260.35	10.50	9.52	NBR	SUM-522
E102608701	279.40	260.35	13.97	12.70	PU	PUM-215
E10260L503	279.40	260.35	13.97	12.70	PU	PUM-310
E102540801	285.75	254.00	27.94	26.00	NBR	SUM-421
E10265L501	295.00	265.00	20.90	19.00	PU	PUM-362
E102541102	298.45	254.00	27.94	26.97	NBR	SUM-509
E102731101	298.45	273.05	20.95	19.05	NBR	SUM-158
E102706701	300.00	270.00	16.00	15.00	FKM	SUM-553
E102791101	304.80	279.40	20.95	19.05	NBR	SUM-376
E10279L501	304.80	279.40	20.95	19.05	PU	PUM-401

Part No.	D (H10)	d (f8/h9)	L (+0.2)	H	Material	Mould No.
E102796703	304.80	279.40	20.95	19.05	FKM	SUM-858
E10285D601	304.80	285.00	17.60	16.20	HNBR	SUM-694
E10285L501	304.80	285.75	10.50	9.52	PU	PUM-204
E10292L501	304.80	292.10	6.98	6.35	PU	PUM-205
E10292L502	304.80	292.10	10.50	9.52	PU	PUM-288
E10290L502	320.00	290.00	22.00	20.00	PU	PUM-361
E10290L501	320.00	290.00	27.50	25.00	PU	PUM-250
E103001101	330.00	300.00	22.00	20.00	NBR	SUM-128
E102981001	330.20	298.45	24.50	22.22	NBR	SUM-407
E10304C302	330.20	304.80	13.97	12.70	XNBR	SUM-479
E10304C401	330.20	304.80	20.95	19.05	NBR	SUM-472
E10304C301	330.20	304.80	20.95	19.05	XNBR	SUM-477
E10322L501	335.00	322.00	15.70	14.50	PU	PUM-179
E103046701	342.90	304.80	34.25	31.75	FKM	SUM-831
E10317CG01	342.90	317.50	20.95	19.05	PU	PUM-309
E10317K301	342.90	317.50	20.95	19.05	HYTREL	PUM-354
E10317L501	355.60	317.50	23.00	21.00	PU	PUM-153
E103171101	355.60	317.60	24.50	22.22	NBR	SUM-422
E103541001	378.00	354.00	22.00	20.00	NBR	SUM-126
E103508501	380.00	350.00	16.00	15.00	FKM/FABRIC	SUM-734
E103551101	381.00	355.60	20.95	19.05	NBR	SUM-130
E103606701	390.00	360.00	22.00	20.00	FKM	SUM-628
E103708301	400.00	370.00	32.50	30.00	NBR/FABRIC	SUM-609
E10381S401	405.94	381.50	14.80	13.77	HNBR	SUVG-634
E10400C501	412.75	400.05	17.47	15.87	XNBR	SUVG-393
E10393K301	419.10	393.70	20.95	19.05	HYTREL	PUM-363
E10400C502	419.10	400.05	17.47	15.87	XNBR	SUVG-401
E100419K301	444.50	419.10	20.95	19.05	HYT	PUM-290
E104317901	457.20	431.80	20.95	19.05	HYT	PUM-402
E10463L501	482.60	463.55	20.95	19.05	PU	PUM-299
E104821101	508.00	482.60	13.97	12.70	NBR	SUVG-301
E10495K301	520.70	495.30	20.95	19.05	HYT	PUM-295
E10498O501	523.87	498.47	20.95	19.05	PU	PUM-296
E10520D601	539.75	520.70	16.00	14.73	HNBR	SUVG-422
E10533D701	558.80	533.40	13.97	12.70	HNBR	SUVG-481
E10533L501	558.80	533.40	13.97	12.70	PU	PUM-194
E105336601	558.80	533.40	20.95	19.05	FKM	SUVG-444
E105611001	609.60	561.00	37.50	35.00	NBR	SUVG-432
E105716601	609.60	571.50	20.95	19.05	FKM	SUVG-446
E106281001	660.40	628.25	18.00	16.50	NBR	SUVG-438
E106991103	741.00	699.60	33.50	31.00	NBR	SUVG-519
E106991101	743.40	699.60	38.50	36.40	NBR	SUVG-520
E106991104	744.40	699.60	38.50	36.00	NBR	SUVG-521
E10999S401	1155.70	1130.30	13.60	12.64	HNBR	SUVG-602

Bold sizes are readily available in stock.
Other materials are available on request.

E15

Single Acting Symmetrical Seal

DETAILS

E15 seal is a combination of U-cup loaded with quad ring in between precision trimmed sealing lips. It is a conventional lip type seal to produce a unique sealing capable of sealing in vacuum & high and low-pressure application. The standard polyurethane material provides high wear resistance and quad ring energizer functions as a spring to maintain sealing contact under low pressure or vacuum applications.

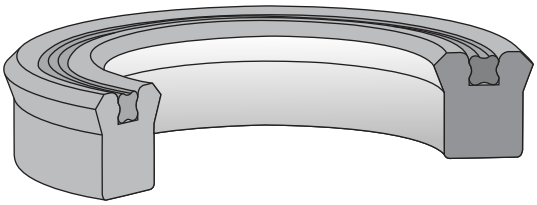

COMPATIBILITY

Mineral oils, bio oils, water soluble & water glycol fluids.

MATERIAL

U seal : Polyurethane 92 Shore A
Quad-Ring : Nitrile Rubber 70/75 Shore A

APPLICATION

- Medium duty hydraulic cylinders, holding platforms.
- Suitable for double acting cylinders.
- Can also be used as a Rod Seal in conjunction with S15 style rod seal for heavy applications.
- Can also be used in equivalent to S19 rod seal.

OPERATING CONDITIONS

Temperature Range : -30°C to + 100°C
Pressure : 350 Bar
Speed : 1.0 m/s

FEATURES

- Excellent sealability during low & high pressure.
- Long service life.
- Easily retrofits other seals.
- Precision trimmed lips.
- Easy to install.

SURFACE ROUGHNESS

Static : 1.6 µmRa
Dynamic : 0.4 µmRa

INSTALLATION & ASSEMBLY

Careful fitting is the prerequisite for the correct functioning of the seal. Recommended to use Maxspare Seal Twistor for eady installation. The seal must be properly lubricated before installation.

PERMISSIBLE EXTRUSION GAP	E max (mm)
150 Bar	0.60
250 Bar	0.50
350 Bar	0.40

E15

Single Acting Symmetrical Seal

MAX SPARE LIMITED
QUALITY. PRECISION. SPEED.

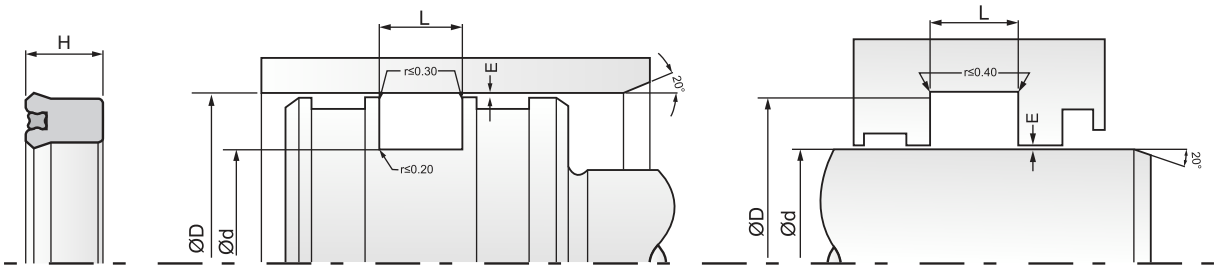

Part No.	D (H10)	d (f8/h9)	L (+0.2)	H	Material	Mould No.
E15005L501	12.00	5.00	5.50	5.00	PU	PUA-143
E15006L501	15.87	6.35	5.25	4.75	PU	PUA-408
E15010L501	16.00	10.00	3.5.	3.15	PU	PUA-474
E150108701	18.00	10.00	6.40	5.80	PU	PUA-676
E15010L502	18.00	10.00	6.63	6.00	PU	PUA-657
E150091001	19.05	9.53	5.50	5.00	NBR	SUA-1541
E15012L501	22.00	12.00	8.73	8.00	PU	PUA-140
E15016L501	22.00	16.00	6.98	6.20	PU	PUA-491
E15015L503	22.22	15.87	3.5.	3.17	PU	PUA-682
E15015L502	22.22	15.87	6.98	6.40	PU	PUA-398
E150170801	23.81	17.46	6.98	6.40	PU	PUA-399
E15016L502	24.00	16.00	5.50	5.00	PU	PUA-910
E15017L501	25.00	17.00	7.20	6.50	PU	PUA-377
E15018L503	25.00	18.00	5.50	5.00	PU	PUA-683
E15019L501	25.39	19.05	3.60	3.30	PU	PUB-1233
E15015L501	25.40	15.87	8.73	8.00	PU	PUB-625
E15016L502	26.00	16.00	7.70	7.00	PU	PUB-1434
E15016L503	26.00	16.00	7.70	7.00	PU	PUB-1471
E15018L502	26.00	18.00	5.50	5.00	PU	PUB-1404
E150190801	26.18	19.84	3.60	3.30	NBR	PUB-808
E15020L503	28.00	20.00	5.50	5.00	PU	PUB-1252
E15020L502	28.00	20.00	6.30	5.70	PU	PUB-481
E15020L504	30.00	20.00	7.20	6.70	PU	PUB-1469
E15022L501	30.00	22.00	5.50	5.00	PU	PUB-1472
E150258701	31.75	25.40	6.98	6.35	PU	PUB-2126
E15025L503	35.00	25.00	7.70	7.00	PU	PUB-1356
E15028L501	35.00	28.50	3.60	3.25	PU	PUB-1332
E15028R301	36.00	28.00	5.80	5.30	PU	PUB-1290
E15025L502	38.00	25.00	11.00	10.00	PU	PUB-1254
E15025L504	38.00	25.00	11.00	10.00	PU	PUB-1403
E150256701	38.10	25.40	10.00	9.00	FKM	SUB-3593
E15032L502	40.00	30.00	7.70	7.00	PU	PUB-1463
E15030L501	40.00	30.00	11.00	10.00	PU	PUB-490
E150318701	41.27	31.75	8.73	7.93	PU	PUB-2125
E15031L501	41.27	31.75	8.73	8.00	PU	PUB-418
E15032L501	42.00	32.00	6.63	6.00	PU	PUB-1470
E15035L501	43.00	35.00	8.73	8.00	PU	PUB-1289
E150346401	43.65	34.92	6.63	6.00	FKM	SUB-3358
E15035L502	44.00	35.00	8.73	8.00	PU	PUB-1464
E15028K301	44.45	28.58	8.73	7.93	HYTREL	PUB-1613
E15028K302	44.45	28.58	10.50	9.52	HYTREL	PUB-1614
E150388701	47.62	38.10	10.50	9.52	NBR	PUB-2124
E15038L501	47.62	38.10	10.50	9.52	PU	PUB-663
E150376601	50.00	37.00	6.63	6.00	FKM	SUB-1590
E15040L502	50.00	40.00	6.63	6.00	PU	PUB-1917
E15040L501	50.00	40.00	8.00	7.30	PU	PUB-1402
E150441101	50.80	44.45	3.5.	3.17	NBR	SUC-2425
E15038L502	53.97	38.10	8.73	7.93	PU	PUC-1450
E15044L501	53.97	44.45	6.98	6.35	PU	PUC-765
E150531101	60.32	53.97	3.5.	3.17	NBR	SUC-2426
E15050L504	63.00	50.00	11.00	10.00	PU	PUC-604
E15047L501	63.47	47.62	13.97	12.70	PU	PUC-1451

Part No.	D (H10)	d (f8/h9)	L (+0.2)	H	Material	Mould No.
E150506701	63.50	50.80	6.98	6.35	FKM	SUC-1829
E150506702	63.50	50.80	10.50	9.52	FKM	SUC-1885
E15050L502	63.50	50.80	10.50	9.52	PU	PUC-532
E15056L502	64.00	56.00	10.00	9.00	PU	PUC-853
E15050L505	65.00	50.00	13.00	12.00	PU	PUC-1007
E15056L501	66.00	56.00	6.63	6.00	PU	PUC-316
E15057L501	69.85	57.15	10.50	9.52	PU	PUC-533
E15060L401	69.85	60.32	5.25	4.76	PU	PUC-974
E150608701	69.85	60.32	20.50	19.05	PU	PUC-1447
E15055L501	70.00	55.00	11.50	10.50	PU	PUC-938
E150601101	70.64	60.32	5.50	5.00	NBR	SUC-1892
E15050L506	72.00	50.00	7.70	7.00	PTFE	PUC-1378
E15050L507	72.00	50.00	10.00	9.00	PU	PUC-1525
E150601001	72.00	60.00	11.00	10.00	NBR	SUC-2135
E150636401	73.00	63.00	7.20	6.50	FKM	SUC-2821
E15063L502	73.02	63.50	10.50	9.52	PU	PUC-1003
E150631101	73.81	63.50	5.50	5.00	NBR	SUC-1891
E150636701	76.20	63.50	10.50	9.50	FKM	SUD-1440
E150696601	76.20	69.85	6.98	6.20	FKM	SUD-1008
E15063L501	78.00	63.00	11.50	11.40	PU	PUD-1041
E150696602	79.37	69.85	5.25	4.60	FKM	SUD-1009
E15069L50	79.37	69.85	8.73	7.93	PU	PUD-671
E15070L502	80.00	70.00	11.00	10.00	PU	PUD-743
E150766601	82.55	76.20	6.98	6.20	FKM	SUD-1007
E150765901	85.72	76.20	10.50	9.52	PU	PUD-1203
E150766602	87.20	76.00	10.50	9.50	FKM	SUD-1856
E15073L501	88.90	73.02	10.50	9.52	PU	PUD-422
E15076R301	88.90	76.20	10.50	9.52	PU	PUD-731
E150798701	88.90	79.37	5.25	4.80	PU	PUD-867
E15070L501	90.00	70.00	13.00	12.00	PU	PUD-515
E15076L501	92.07	76.20	8.73	7.93	PU	PUD-594
E150850801	95.24	85.72	10.50	9.40	NBR	SUD-1011
E15085L502	100.00	85.00	11.00	10.00	PU	PUD-751
E15085L501	100.00	85.00	13.00	12.00	PU	PUD-523
E150886601	101.40	88.90	8.00	7.25	FKM	SUE-919
E150886701	101.60	88.90	11.00	10.00	FKM	SUE-997
E150956703	104.77	95.25	10.50	9.52	FKM	SUE-1182
E15095L501	107.95	95.25	10.50	9.52	PU	PUE-596
E150956601	108.00	95.35	8.00	7.25	FKM	SUE-920
E15088L501	108.50	88.90	13.50	12.50	PU	PUE-699
E15100L501	115.00	100.00	13.00	12.00	PU	PUE-353
E151078701	120.65	107.95	6.98	6.35	PU	PUE-687
E151116702	120.65	111.12	5.25	4.75	FKM	SUE-680
E151116701	120.65	111.12	10.50	9.52	FKM	SUE-678
E15112L501	125.00	112.00	10.00	9.00	PU	PUE-490
E151076701	127.00	107.95	11.00	10.00	FKM	SUF-694
E15114C401	127.00	114.30	6.98	6.35	XNBR	SUF-992
E15120L501	142.87	120.65	22.50	20.95	PU	PUF-473
E151270801	146.05	127.00	17.50	15.90	NBR	SUF-512
E151336702	152.40	133.35	17.50	16.00	FKM	SUG-789
E151406601	160.00	140.00	13.00	12.00	FKM	SUG-702
E15140L501	160.00	140.00	16.50	15.00	PU	PUG-326

Bold sizes are readily available in stock.
Other materials are available on request.

E15

Single Acting Symmetrical Seal

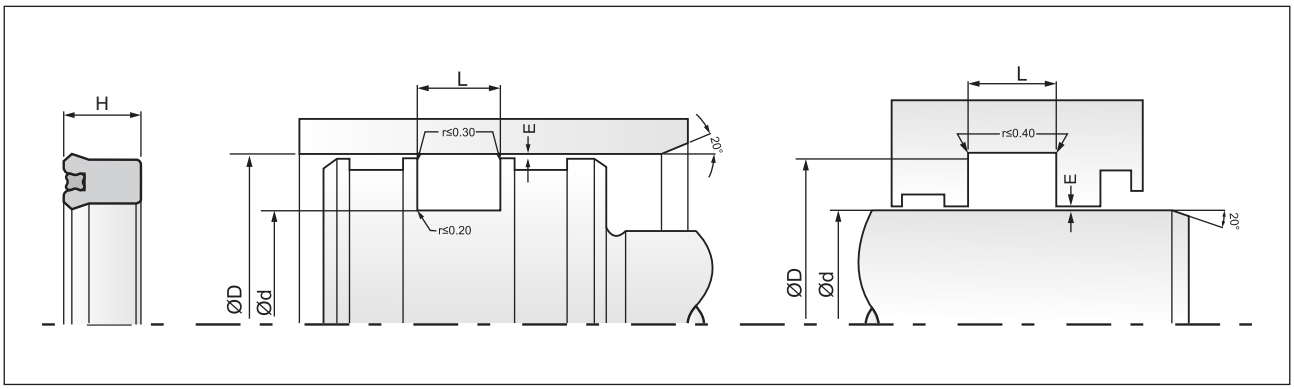

Part No.	D (H10)	d (f8/h9)	L (+0.2)	H	Material	Mould No.
E151528701	165.10	152.40	6.98	6.35	PU	PUG-330
E151528702	165.10	152.40	10.50	9.52	PU	PUG-329
E15150L501	170.00	150.00	16.50	15.00	PU	PUG-393
E15160L501	190.00	160.00	19.50	18.00	PU	PUH-171
E15180L501	200.00	180.00	16.50	15.00	PU	PUH-304
E15190C401	203.20	190.30	6.98	6.35	XNBR	SUJ-435

Part No.	D (H10)	d (f8/h9)	L (+0.2)	H	Material	Mould No.
E151908701	203.50	190.50	6.98	6.35	PU	PUJ-229
E15196L501	209.55	196.85	13.97	12.70	PU	PUJ-199
E15200L501	225.00	200.00	16.50	15.00	PU	PUJ-252
E15230L501	260.00	230.00	19.50	18.00	PU	PUM-338
E15260L501	290.00	260.00	19.50	18.00	PU	PUM-347
E15320L501	350.00	320.00	19.50	18.00	PU	PUM-337

Bold sizes are readily available in stock.
Other materials are available on request.

E19

Single Acting Symmetrical Seal

DETAILS

E19 seal is a single acting robust design seal used for medium to heavy duty applications. This seal comprises of a rubberised fabric U seal base bonded to a rubber energiser and needs split piston. The seal comprises a rubberized fabric which is bonded to a nitrile energizer and needs a split housing. The seal section is pre-loaded by the housing when installed to ensure effective sealing at low pressure. When the pressure increases, the nitrile energizes the fabric to increase the sealing area and hence improving the efficiency of the seal. The strength and durability of the rubberized fabric combines with its ability to retain lubricant keeping friction and wear to a minimum.

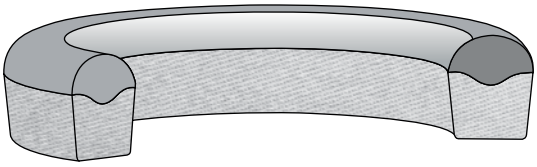

COMPATIBILITY

Mineral oils, bio oils, water soluble & water glycol fluids

MATERIAL

Nitrile Rubber with fabric reinforcement 80/85 Shore A
FKM with fabric reinforcement 80/85 Shore A

APPLICATION

- Medium to heavy duty hydraulic presses.
- Steel mills, earthmoving equipments.
- Requires split gland.
- Can also be used as a piston seal.

OPERATING CONDITIONS

Temperature Range	:	-20°C to + 100°C (NBR)
	:	-20°C to + 220°C (FKM)
Pressure	:	400 Bar
Speed	:	1.0 m/s

FEATURES

- Excellent sealability during high pressure.
- Long service life.
- General purpose seal.

SURFACE ROUGHNESS

Static	:	1.6 µmRa
Dynamic	:	0.4 µmRa

INSTALLATION & ASSEMBLY

E19 seals are fitted in split piston / open grooves with retainer ring.

PERMISSIBLE EXTRUSION GAP	E max (mm)
150 Bar	0.40
250 Bar	0.30
400 Bar	0.20

E19

Single Acting Symmetrical Seal

MAX SPARE LIMITED
QUALITY. PRECISION. SPEED.

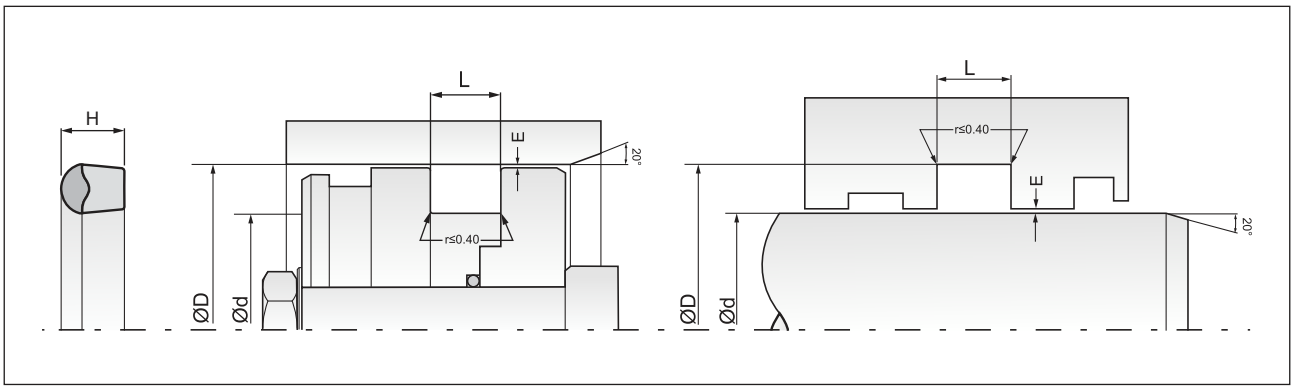

Part No.	D (H11)	d (f8)	L (+0.2)	H	Material	Mould No.
E190068301	12.00	6.00	7.81	7.50	NBR/FABRIC	SRV-1447
E190088302	14.50	8.00	6.25	6.00	NBR/FABRIC	SRV-1888
E190098301	15.00	9.00	4.80	4.60	NBR/FABRIC	SRV-1816
E190088303	16.00	8.00	7.29	7.00	NBR/FABRIC	SRV-2170
E190088301	16.00	8.00	8.33	8.00	NBR/FABRIC	SRV-1317
E190108501	18.00	10.00	6.25	6.00	FKM/FABRIC	SRV-2218
E190108301	19.00	10.00	6.25	6.00	NBR/FABRIC	SRV-1985
E190101001	19.00	10.00	6.45	6.20	NBR	SRV-1002
E190101002	20.50	10.00	6.25	6.00	NBR/FABRIC	SRV-1859
E190121001	25.00	12.00	10.00	9.50	NBR/FABRIC	SRV-1695
E190158301	25.00	15.00	8.33	8.00	NBR/FABRIC	SRV-1663
E190208501	26.00	20.00	3.65	3.50	FKM/FABRIC	SRV-1691
E190208303	27.00	20.00	6.25	6.00	NBR/FABRIC	SRV-1773
E190201001	27.00	20.00	6.25	6.00	NBR	SRV-2186
E190208302	28.00	20.00	5.73	5.50	NBR/FABRIC	SRV-1638
E190208304	28.00	20.00	6.77	6.50	NBR/FABRIC	SRV-1916
E190221101	28.50	22.40	4.70	4.50	NBR	SRV-1645
E190168301	30.00	16.00	11.15	10.70	NBR/FABRIC	SRV-1730
E190228304	30.00	22.00	5.83	5.60	NBR/FABRIC	SRV-1188
E190258301	31.75	25.40	6.25	6.00	NBR/FABRIC	SRV-1753
E190248301	32.00	24.00	7.29	7.00	NBR/FABRIC	SRV-1655
E190218301	34.00	21.00	9.38	9.00	NBR/FABRIC	SRV-1681
E190228305	34.00	22.00	8.33	8.00	NBR/FABRIC	SRV-1283
E190228302	34.00	22.00	9.38	9.00	NBR/FABRIC	SRV-861
E190208301	35.00	20.00	11.46	11.00	NBR/FABRIC	SRV-883
E190258306	35.00	25.00	6.77	6.50	NBR/FABRIC	SRV-345
E190253401	35.00	25.00	8.85	8.50	EPDM/FABRIC	SRV-1625
E190288303	36.00	28.00	6.25	6.00	NBR/FABRIC	SRV-448
E190261101	38.00	26.00	6.55	6.30	NBR	SRV-1620
E190288302	38.00	28.00	8.85	8.50	NBR/FABRIC	SRV-831
E190308304	38.00	30.00	8.33	8.00	NBR/FABRIC	SRV-426
E190258315	40.00	25.00	8.85	8.50	NBR/FABRIC	SRV-180
E190258313	40.00	25.00	9.38	9.00	NBR/FABRIC	SRV-1336
E190258312	40.00	25.00	10.42	10.00	NBR/FABRIC	SRV-1189
E190258311	40.00	25.00	11.46	11.00	NBR/FABRIC	SRV-879
E190258314	40.00	25.00	11.98	11.50	NBR/FABRIC	SRV-1476
E190268301	40.00	26.00	9.38	9.00	NBR/FABRIC	SRV-1682
E190288304	40.00	28.00	8.33	8.00	NBR/FABRIC	SRV-1171
E190303401	40.00	30.00	7.81	7.50	EPDM/FABRIC	SRV-1289
E190308501	40.00	30.00	8.33	8.00	FKM/FABRIC	SRV-1334
E190318303	40.00	31.00	9.38	9.00	NBR/FABRIC	SRV-1680
E190328307	40.00	32.00	7.49	7.20	NBR/FABRIC	SRV-1653
E190328305	40.00	32.00	9.38	9.00	NBR/FABRIC	SRV-1175
E190328303	42.00	32.00	6.77	6.50	NBR/FABRIC	SRV-344
E190318308	43.00	31.00	9.38	9.00	NBR/FABRIC	SRV-1684
E190358307	43.00	35.00	6.25	6.00	NBR/FABRIC	SRV-1892
E190368307	44.00	36.00	6.25	6.00	NBR/FABRIC	SRV-2209
E190318302	45.00	31.00	7.07	6.80	NBR/FABRIC	SRV-1023
E190328306	45.00	32.00	10.10	9.70	NBR/FABRIC	SRV-1326
E190353402	45.00	35.00	10.42	10.00	EPDM/FABRIC	SRV-1212
E190368306	45.00	36.00	5.73	5.50	NBR/FABRIC	SRV-2185
E190328304	46.00	32.00	10.00	9.60	NBR/FABRIC	SRV-1024

Part No.	D (H11)	d (f8)	L (+0.2)	H	Material	Mould No.
E190368305	46.00	36.00	10.42	10.00	NBR/FABRIC	SRV-1555
E190348301	47.63	34.93	10.58	10.16	NBR/FABRIC	SRV-919
E190358301	48.00	35.00	8.33	8.00	NBR/FABRIC	SRV-1172
E190308303	50.00	30.00	14.58	14.00	NBR/FABRIC	SRV-178
E190358306	50.00	35.00	8.33	8.00	NBR/FABRIC	SRV-1723
E190358304	50.00	35.00	10.42	10.00	NBR/FABRIC	SRV-389
E190408314	50.00	40.00	5.20	5.00	NBR/FABRIC	SRV-2165
E19040D601	50.00	40.00	5.73	5.50	HNBR/FABRIC	SRV-966
E190408311	50.00	40.00	8.85	8.50	NBR/FABRIC	SRV-1256
E190408312	50.00	40.00	9.38	9.00	NBR/FABRIC	SRV-1318
E190408315	50.00	40.00	10.94	10.50	NBR/FABRIC	SRV-2171
E190408310	50.00	40.00	13.54	13.00	NBR/FABRIC	SRV-884
E190408309	50.00	40.00	14.58	14.00	NBR/FABRIC	SRV-877
E190428501	50.00	42.00	8.33	8.00	FKM/FABRIC	SRV-1343
E190342201	50.80	34.93	11.58	11.12	CR/FABRIC	SRV-1722
E190358305	51.00	35.00	11.46	11.00	NBR/FABRIC	SRV-1679
E190368304	51.00	36.00	11.46	11.00	NBR/FABRIC	SRV-1255
E190458304	53.00	45.00	8.33	8.00	NBR/FABRIC	SRV-999
E190388302	53.97	38.10	11.46	11.00	NBR/FABRIC	SRV-1108
E190448302	53.97	44.45	8.87	8.52	NBR/FABRIC	SRV-1458
E190428301	54.00	42.00	7.81	7.50	NBR	SRV-1702
E190403401	55.00	40.00	10.42	10.00	EPDM/FABRIC	SRV-348
E190458306	55.00	45.00	7.50	7.30	NBR/FABRIC	SRV-1703
E190408313	56.00	40.00	8.33	8.00	NBR/FABRIC	SRV-1724
E190368303	57.00	36.00	12.50	12.00	NBR/FABRIC	SRV-869
E190373401	57.00	37.00	10.42	10.00	EPDM/FABRIC	SRV-1075
E190438301	60.00	43.00	10.00	9.60	NBR/FABRIC	SRV-1025
E190458302	60.00	45.00	11.46	11.00	NBR/FABRIC	SRV-350
E190508502	60.00	50.00	8.33	8.00	FKM/FABRIC	SRV-1335
E190508308	60.00	50.00	14.58	14.00	NBR/FABRIC	SRV-867
E190458301	62.00	45.00	8.96	8.60	NBR/FABRIC	SRV-778
E190458305	62.00	45.00	12.50	12.00	NBR/FABRIC	SRV-1269
E190448301	63.00	44.00	9.38	9.00	NBR/FABRIC	SRV-1314
E190508310	63.00	50.00	8.44	8.10	NBR/FABRIC	SRV-1026
E190538301	63.00	53.00	8.33	8.00	NBR/FABRIC	SRV-1605
E190448304	63.50	44.50	13.02	12.50	NBR/FABRIC	SRV-1612
E190478301	63.50	47.62	10.73	10.30	NBR/FABRIC	SRV-1615
E190508501	63.50	50.80	9.38	9.00	FKM/FABRIC	SRV-1065
E190458303	65.00	45.00	14.58	14.00	NBR/FABRIC	SRV-874
E190508503	65.00	50.00	10.42	10.00	FKM/FABRIC	SRV-1363
E190508303	65.00	50.00	11.46	11.00	NBR/FABRIC	SRV-458
E190508311	65.00	50.00	12.50	12.00	NBR/FABRIC	SRV-1050
E190508316	65.00	50.00	15.63	15.00	NBR/FABRIC	SRV-1932
E190558302	65.00	55.00	8.33	8.00	NBR/FABRIC	SRV-862
E190558304	65.00	55.00	13.54	13.00	NBR/FABRIC	SRV-913
E190508314	66.67	50.80	10.53	10.11	NBR/FABRIC	SRV-1229
E190578301	67.60	57.00	6.60	6.35	NBR/FABRIC	SRV-570
E190503401	70.00	50.00	13.54	13.00	EPDM/FABRIC	SRV-882
E190508309	70.00	50.00	13.54	13.00	NBR/FABRIC	SRV-1131
E190558306	70.00	55.00	10.42	10.00	NBR/FABRIC	SRV-1384
E190608310	70.00	60.00	7.29	7.00	NBR/FABRIC	SRV-1324
E190608501	70.00	60.00	11.46	11.00	FKM/FABRIC	SRV-1101

Bold sizes are readily available in stock.
Other materials are available on request.

E19

Single Acting Symmetrical Seal

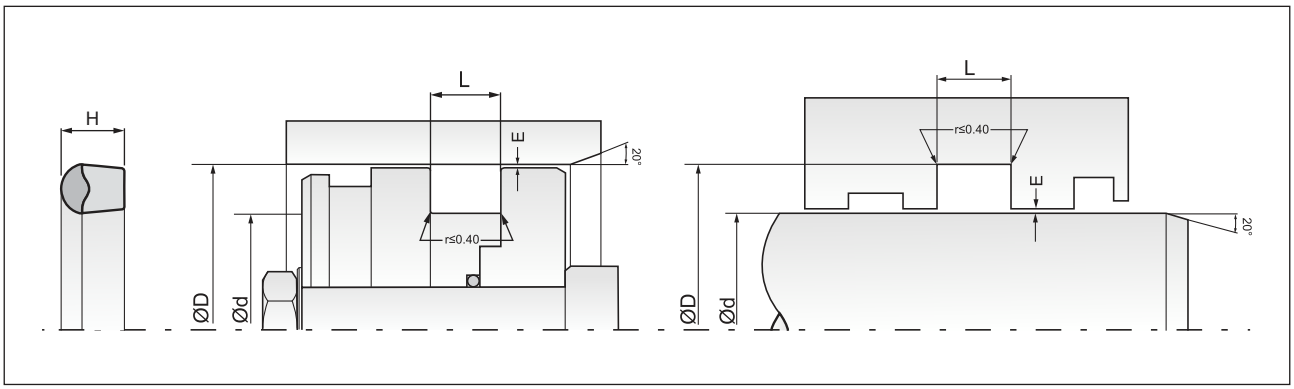

Part No.	D (H11)	d (f8)	L (+0.2)	H	Material	Mould No.
E190638304	70.00	63.00	12.50	12.00	NBR/FABRIC	SRV-1608
E190568303	70.50	56.00	13.54	13.00	NBR/FABRIC	SRV-1626
E190568304	71.00	56.00	13.02	12.50	NBR/FABRIC	SRV-1676
E190608307	71.00	60.00	9.38	9.00	NBR/FABRIC	SRV-283
E190608303	72.00	60.00	9.38	9.00	NBR/FABRIC	SRV-643
E190558305	75.00	55.00	8.33	8.00	NBR/FABRIC	SRV-1117
E190558301	75.00	55.00	14.58	14.00	NBR/FABRIC	SRV-859
E190568301	75.00	56.00	12.50	12.00	NBR/FABRIC	SRV-1179
E190638302	75.00	63.00	9.38	9.00	NBR/FABRIC	SRV-1242
E190658307	75.00	65.00	13.54	13.00	NBR/FABRIC	SRV-868
E190698301	76.00	56.00	14.90	14.30	NBR/FABRIC	SRV-1001
E190608309	76.20	60.33	12.41	11.91	NBR/FABRIC	SRV-918
E190628301	78.00	62.00	11.98	11.50	NBR/FABRIC	SRV-2121
E190708308	78.00	70.00	6.25	6.00	NBR/FABRIC	SRV-1327
E190508317	80.00	50.00	25.00	24.00	NBR/FABRIC	SRV-2148
E190608311	80.00	60.00	10.42	10.00	NBR/FABRIC	SRV-1385
E190608308	80.00	60.00	14.58	14.00	NBR/FABRIC	SRV-916
E190638303	80.00	63.00	11.46	11.00	NBR/FABRIC	SRV-1585
E190638305	80.00	63.00	12.50	12.00	NBR/FABRIC	SRV-1611
E190658310	80.00	65.00	10.42	10.00	NBR/FABRIC	SRV-1390
E190658312	80.00	65.00	11.46	11.00	NBR/FABRIC	SRV-1504
E190658313	80.00	65.00	12.70	12.20	NBR/FABRIC	SRV-1659
E190718501	80.00	71.00	8.33	8.00	FKM/FABRIC	SRV-890
E190708307	81.00	70.00	9.58	9.20	NBR/FABRIC	SRV-1325
E190638301	81.91	63.50	13.90	13.30	NBR/FABRIC	SRV-1145
E190701001	82.00	70.00	9.38	9.00	NBR	SRV-1758
E190708305	84.00	70.00	11.46	11.00	NBR/FABRIC	SRV-1058
E190648301	85.00	64.00	16.67	16.00	NBR/FABRIC	SRV-1708
E190658309	85.00	65.00	13.54	13.00	NBR/FABRIC	SRV-1287
E190708310	85.00	70.00	10.42	10.00	NBR/FABRIC	SRV-2162
E190708502	85.00	70.00	11.46	11.00	FKM/FABRIC	SRV-1102
E190768301	88.64	76.00	10.00	9.50	NBR/FABRIC	SRV-1055
E190638307	88.90	63.50	15.40	14.70	NBR/FABRIC	SRV-1979
E190708501	90.00	70.00	12.50	12.00	FKM/FABRIC	SRV-475
E190708306	90.00	70.00	14.58	14.00	NBR/FABRIC	SRV-294
E190708309	90.00	70.00	16.67	16.00	NBR/FABRIC	SRV-1876
E190808306	92.00	80.00	10.42	10.00	NBR/FABRIC	SRV-2182
E190658314	95.00	65.00	17.39	16.70	NBR/FABRIC	SRV-2107
E190758301	95.00	75.00	9.38	9.00	NBR/FABRIC	SRV-1168
E190751101	95.00	75.00	11.46	11.00	NBR	SRV-1614
E190858304	95.00	85.00	7.81	7.50	NBR/FABRIC	SRV-1637
E190768302	95.25	76.20	14.86	14.27	NBR/FABRIC	SRV-1475
E190708302	100.00	70.00	10.42	10.00	NBR/FABRIC	SRV-1273
E190803401	100.00	80.00	12.50	12.00	EPDM/FABRIC	SRV-311
E190808305	100.00	80.00	13.02	12.50	NBR/FABRIC	SRV-1803
E190803404	100.00	80.00	15.63	15.00	EPDM/FABRIC	SRV-1213
E190828302	100.00	82.70	12.70	12.20	NBR/FABRIC	SRV-1668
E190858305	100.00	85.00	13.02	12.50	NBR/FABRIC	SRV-1675
E190828301	101.60	82.55	13.82	13.28	NBR/FABRIC	SRV-1230
E190258315	101.60	85.50	11.46	11.00	NBR	SRV-160
E190888501	101.99	88.90	9.38	8.70	FKM/FABRIC	SRV-1857
E190908305	102.00	90.00	8.85	8.50	NBR/FABRIC	SRV-2161

Part No.	D (H11)	d (f8)	L (+0.2)	H	Material	Mould No.
E190958303	104.77	95.25	6.77	6.50	NBR/FABRIC	SRV-579
E190850901	105.00	85.00	12.50	12.00	NBR/FABRIC	SRV-939
E190908303	105.00	90.00	12.50	12.00	NBR/FABRIC	SRV-1432
E190958301	106.00	95.00	10.00	9.50	NBR/FABRIC	SRV-1234
E190908304	110.00	90.00	14.58	14.00	NBR/FABRIC	SRV-1713
E190903401	110.00	90.00	14.58	14.00	EPDM/FABRIC	SRV-899
E190908302	110.00	90.00	15.63	15.00	NBR/FABRIC	SRV-860
E190908301	115.00	90.00	19.79	19.00	NBR/FABRIC	SRV-782
E191008309	115.00	100.00	11.46	11.00	NBR/FABRIC	SRV-2194
E190998301	125.00	99.00	17.71	17.00	NBR/FABRIC	SRV-1707
E191008307	125.00	100.00	12.50	12.00	NBR/FABRIC	SRV-551
E191008305	125.00	100.00	19.79	19.00	NBR/FABRIC	SRV-872
E191058306	125.00	105.00	18.75	18.00	NBR/FABRIC	SRV-1642
E191106701	125.00	110.00	11.46	11.00	FKM	SRV-1685
E191108304	125.00	110.00	11.76	11.30	NBR/FABRIC	SRV-1661
E191018302	127.00	101.60	16.53	15.87	NBR/FABRIC	SRV-998
E191018304	127.00	101.60	19.84	19.05	NBR/FABRIC	SRV-1644
E191018303	127.00	101.60	20.83	20.00	NBR/FABRIC	SRV-1396
E191003403	130.00	100.00	13.54	13.00	EPDM/FABRIC	SRV-1677
E191003401	130.00	100.00	16.67	16.00	EPDM/FABRIC	SRV-1113
E191003402	130.00	100.00	20.83	20.00	EPDM/FABRIC	SRV-1214
E191058302	130.00	105.00	12.50	12.00	NBR/FABRIC	SRV-1433
E191108305	130.00	110.00	14.58	14.00	NBR/FABRIC	SRV-1728
E191148302	130.00	114.00	13.54	13.00	NBR/FABRIC	SRV-1250
E191078301	133.35	107.95	19.84	19.05	NBR/FABRIC	SRV-1508
E191108303	135.00	110.00	19.79	19.00	NBR/FABRIC	SRV-871
E191158303	135.00	115.00	14.58	14.00	NBR/FABRIC	SRV-642
E191148301	139.70	114.30	19.84	19.05	NBR/FABRIC	SRV-920
E191158302	140.00	115.00	15.20	14.50	NBR/FABRIC	SRV-386
E191208303	140.00	120.00	11.46	11.00	NBR/FABRIC	SRV-1603
E191208301	140.00	120.00	11.46	11.00	NBR/FABRIC	SRV-1109
E191258306	140.00	125.00	11.46	11.00	NBR/FABRIC	SRV-2195
E191208302	145.00	120.00	20.31	19.50	NBR/FABRIC	SRV-1261
E191238301	149.22	123.82	19.84	19.05	NBR/FABRIC	SRV-1546
E191128301	150.00	112.00	16.67	16.00	NBR/FABRIC	SRV-1134
E191203401	150.00	120.00	16.67	16.00	EPDM/FABRIC	SRV-1370
E191258305	150.00	125.00	14.10	13.50	NBR/FABRIC	SRV-1873
E191258501	150.00	125.00	20.83	20.00	FKM/FABRIC	SRV-2104
E191308302	150.00	130.00	12.50	12.00	NBR/FABRIC	SRV-1588
E191308301	150.00	130.00	16.67	16.00	NBR/FABRIC	SRV-1388
E191318301	150.00	131.00	18.75	18.00	NBR/FABRIC	SRV-1333
E191278303	152.50	127.00	22.10	21.22	NBR/FABRIC	SRV-1116
E191398501	156.76	139.70	10.42	10.00	FKM/FABRIC	SRV-1856
E191338302	158.75	133.35	22.75	21.84	NBR/FABRIC	SRV-921
E191408502	160.00	140.00	12.28	11.80	FKM/FABRIC	SRV-1805
E191408304	160.00	140.00	13.54	13.00	NBR/FABRIC	SRV-1047
E191408302	160.00	140.00	15.63	15.00	NBR/FABRIC	SRV-1051
E191408305	160.00	140.00	20.83	20.00	NBR/FABRIC	SRV-1646
E191398301	165.00	139.00	18.75	18.00	NBR/FABRIC	SRV-1709
E191408306	170.00	140.00	19.79	19.00	NBR/FABRIC	SRV-1998
E191508306	170.00	150.00	10.00	9.60	NBR/FABRIC	SRV-1771
E191508304	170.00	150.00	14.58	14.00	NBR/FABRIC	SRV-863

Bold sizes are readily available in stock.
Other materials are available on request.

E19

Single Acting Symmetrical Seal

MAX SPARE LIMITED
QUALITY. PRECISION. SPEED.

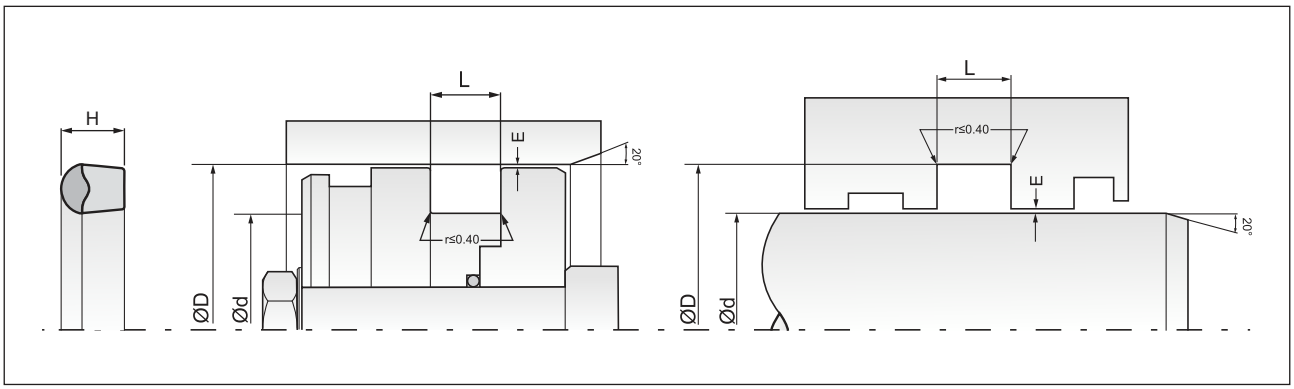

Part No.	D (H11)	d (f8)	L (+0.2)	H	Material	Mould No.
E191508305	178.00	150.00	17.71	17.00	NBR/FABRIC	SRV-1140
E191558301	180.00	155.00	15.63	15.00	NBR/FABRIC	SRV-1635
E191598301	180.00	159.50	13.02	12.50	NBR/FABRIC	SRV-1139
E191608501	180.00	160.00	12.50	12.00	FKM/FABRIC	SRV-1425
E191608301	180.00	160.00	15.63	15.00	NBR/FABRIC	SRV-898
E191498501	180.97	149.22	25.63	24.60	FKM/FABRIC	SRV-1528
E191608304	190.00	160.00	18.75	18.00	NBR/FABRIC	SRV-1799
E191608302	190.00	160.00	23.96	23.00	NBR/FABRIC	SRV-870
E191708301	190.00	170.00	14.58	14.00	NBR/FABRIC	SRV-1110
E191808501	200.00	180.00	14.58	14.00	FKM/FABRIC	SRV-1727
E191808302	200.00	180.00	15.63	15.00	NBR/FABRIC	SRV-866
E191658301	203.20	165.10	29.76	28.57	NBR/FABRIC	SRV-1521
E191808303	208.00	180.00	16.67	16.00	NBR/FABRIC	SRV-2208
E191958301	209.80	195.00	10.42	10.00	NBR/FABRIC	SRV-915
E191651002	210.00	165.00	22.94	22.50	NBR/FABRIC	SRV-1769
E192008302	220.00	200.00	14.58	14.00	NBR/FABRIC	SRV-1111
E192008304	225.00	200.00	17.71	17.00	NBR/FABRIC	SRV-1999
E192008303	230.00	200.00	23.96	23.00	NBR/FABRIC	SRV-1565
E192008301	230.00	200.00	25.00	24.00	NBR/FABRIC	SRV-875
E192108301	240.00	210.00	25.00	24.00	NBR/FABRIC	SRV-864
E192208303	240.00	220.00	13.54	13.00	NBR/FABRIC	SRV-1553
E192158301	247.65	215.90	25.73	24.70	NBR/FABRIC	SRV-1950
E192208302	250.00	220.00	22.92	22.00	NBR/FABRIC	SRV-865
E192258303	250.00	225.00	18.75	18.00	NBR/FABRIC	SRV-907

Part No.	D (H11)	d (f8)	L (+0.2)	H	Material	Mould No.
E192408302	260.00	240.00	16.67	16.00	NBR/FABRIC	SRV-1641
E192348401	266.70	234.95	27.56	26.50	NBR/FABRIC	SRV-2176
E192408301	270.00	240.00	25.00	24.00	NBR/FABRIC	SRV-876
E192418301	273.05	241.30	25.38	24.38	NBR/FABRIC	SRV-1772
E192478301	279.40	247.65	18.75	18.00	NBR/FABRIC	SRV-1173
E192478302	279.40	247.65	26.46	25.40	NBR/FABRIC	SRV-1239
E192482101	280.00	248.00	26.04	25.00	CR/FABRIC	SRV-1657
E192508302	280.00	250.00	15.63	15.00	NBR/FABRIC	SRV-2193
E192508301	280.00	250.00	31.25	31.00	NBR/FABRIC	SRV-873
E192548301	285.75	254.00	25.40	24.40	NBR/FABRIC	SRV-1754
E192608301	292.10	260.35	24.27	23.30	NBR/FABRIC	SRV-1744
E192758301	300.00	275.00	15.63	15.00	NBR/FABRIC	SRV-2192
E192808301	310.00	280.00	22.94	22.50	NBR/FABRIC	SRV-1839
E192908301	320.00	290.00	25.00	24.00	NBR/FABRIC	SRV-1034
E19298301	323.85	292.10	25.73	24.70	NBR/FABRIC	SRV-1951
E193048302	342.90	304.80	27.56	27.50	NBR/FABRIC	SRV-1060
E193048301	355.60	304.80	33.07	31.75	NBR/FABRIC	SRV-1520
E193208401	360.00	320.00	31.25	31.00	NBR/FABRIC	SRV-2177
E193408301	380.00	340.00	31.25	30.00	NBR/FABRIC	SRV-1052
E193548301	381.00	354.00	21.45	20.60	NBR/FABRIC	SRV-1765
E193682101	400.00	368.00	26.04	25.00	CR/FABRIC	SRV-1658
E194008301	440.00	400.00	31.25	30.00	NBR/FABRIC	SRV-1824
E195008301	530.00	500.00	20.83	20.00	NBR/FABRIC	SRV-1779

Bold sizes are readily available in stock.
Other materials are available on request.

E25

Single Acting Symmetrical Seal

DETAILS

E25 seal is a single acting robust design seal used for medium to heavy duty applications. This seal comprises of a rubberised fabric U seal base bonded to a rubber energiser. The seal section is pre-loaded by the housing when installed to ensure effective sealing at low pressure. When the pressure increases the rubber energises the U seal to increase the sealing area and hence the efficiency of the seal. The strength and durability of the rubberized fabric combines with its ability to retain lubricant keeping friction and wear to a minimum.

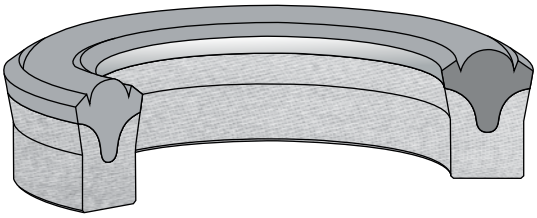

COMPATIBILITY

Mineral oils, bio oils, water soluble & water glycol fluids.

MATERIAL

Nitrile Rubber with fabric reinforcement 80/85 Shore A
FKM with fabric reinforcement 80/85 Shore A

APPLICATION

- Medium to heavy duty hydraulic presses.
- Standard cylinders, telescopic cylinders.
- Machine tools.
- Can also be used as a piston seal.

OPERATING CONDITIONS

Temperature Range	:	-20°C to + 100°C (NBR)
	:	-20°C to + 220°C (FKM)
Pressure	:	250 Bar
Speed	:	0.5 m/s

FEATURES

- Excellent sealability during low & high pressure.
- Well proven design.
- Long service life.
- Good wear resistance.
- Low fraction due to fabric reinforcement.

SURFACE ROUGHNESS

Static	:	1.6 µmRa
Dynamic	:	0.4 µmRa

INSTALLATION & ASSEMBLY

E25 seals are fitted in split piston / open grooves with retainer ring.

PERMISSIBLE EXTRUSION GAP	E max (mm)
150 Bar	0.30
250 Bar	0.20

E25

Single Acting Symmetrical Seal

MAX SPARE LIMITED
QUALITY. PRECISION. SPEED.

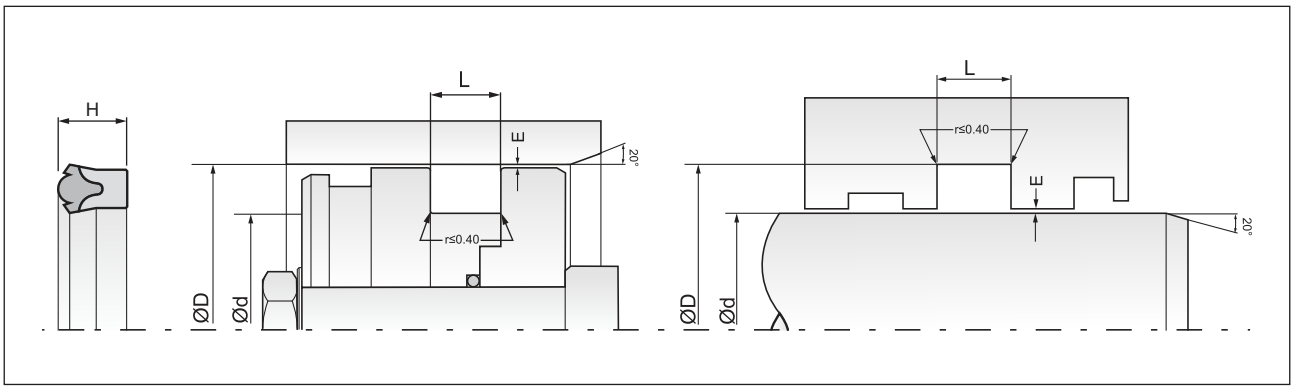

Part No.	D (H11)	d (f8)	L (+0.2)	H	Material	Mould No.
E250058301	12.00	5.00	6.90	5.90	NBR/FABRIC	SRV-2002
E250068302	13.00	6.00	7.00	6.00	NBR/FABRIC	SRV-1329
E250068303	13.00	6.00	7.40	6.40	NBR/FABRIC	SRV-1573
E250068301	14.00	6.00	5.50	4.50	NBR/FABRIC	SRV-957
E250088302	16.00	8.00	11.00	10.00	NBR/FABRIC	SRV-1350
E25009O501	15.87	9.52	4.50	3.50	HYT-HYTREL	PPA-3187
E250108305	17.00	10.00	6.90	5.90	NBR/FABRIC	SRV-1221
E250108307	17.00	10.00	7.14	6.14	NBR/FABRIC	SRV-1796
E250108304	18.00	10.00	5.50	4.50	NBR/FABRIC	SRV-959
E250108306	18.00	10.00	6.80	5.80	NBR/FABRIC	SRV-1369
E250108501	18.00	10.00	7.00	6.00	FKM/FABRIC	SRV-1312
E250128501	19.00	12.00	6.50	5.50	FKM/FABRIC	SRV-1119
E250128303	20.00	12.00	5.50	4.50	NBR/FABRIC	SRV-960
E250126401	19.05	12.70	4.20	3.20	FKM	SRV-1970
E25012O501	19.05	12.70	4.50	3.50	HYT-HYTREL	PPA-2899
E250128304	22.22	12.70	8.00	7.00	NBR/FABRIC	SRV-1654
E250148303	22.00	14.00	6.50	5.50	NBR/FABRIC	SRV-1104
E250148305	22.00	14.00	7.00	6.00	NBR/FABRIC	SRV-1978
E250148302	22.00	14.00	7.40	6.40	NBR/FABRIC	SRV-929
E250148306	22.00	14.00	8.00	7.00	NBR/FABRIC	SRV-2117
E250148301	22.00	14.00	9.00	8.00	NBR/FABRIC	SRV-914
E250148304	30.00	14.00	7.00	6.00	NBR/FABRIC	SRV-1592
E250158302	23.00	15.00	6.40	5.40	NBR/FABRIC	SRV-1169
E25015O501	22.22	15.87	4.50	3.50	HYT-HYTREL	PPA-2924
E250168303	24.00	16.00	6.70	5.70	NBR/FABRIC	SRV-1035
E250168401	24.00	16.00	7.00	6.00	NBR/FABRIC	SRV-2200
E250188303	25.00	18.00	8.00	7.00	NBR/FABRIC	SRV-1342
E250188302	26.00	18.00	5.50	4.50	NBR/FABRIC	SRV-973
E250188301	26.00	18.00	7.00	6.00	NBR/FABRIC	SRV-1053
E250208308	26.00	20.00	6.00	5.00	NBR/FABRIC	SRV-927
E250208305	28.00	20.00	5.50	4.50	NBR/FABRIC	SRV-1080
E250208501	28.00	20.00	6.70	5.70	FKM/FABRIC	SRV-1057
E250208306	28.00	20.00	7.00	6.00	NBR/FABRIC	SRV-1389
E250208309	28.00	20.00	7.00	6.00	NBR/FABRIC	SRV-2066
E250208302	28.00	20.00	7.40	6.40	NBR/FABRIC	SRV-911
E250208304	28.00	20.00	8.00	7.00	NBR/FABRIC	SRV-1068
E250228301	30.00	22.00	7.00	6.00	NBR/FABRIC	SRV-637
E250228303	30.00	22.00	8.00	7.00	NBR/FABRIC	SRV-1087
E250228302	30.00	22.00	9.00	8.00	NBR/FABRIC	SRV-781
E250248501	32.00	24.00	5.50	4.50	FKM/FABRIC	SRV-1434
E250248303.	32.00	24.00	6.70	5.70	NBR/FABRIC	SRV-2196
E250248303	32.00	24.00	7.00	6.00	NBR/FABRIC	SRV-1833
E250248301	32.00	24.00	7.00	6.00	NBR/FABRIC	SRV-881
E250248302	33.30	24.00	7.00	6.00	NBR/FABRIC	SRV-1300
E250258301	33.00	25.00	6.00	5.00	NBR/FABRIC	SRV-1545
E250258305	33.00	25.00	7.00	6.00	NBR/FABRIC	SRV-1704
E250258306	33.00	25.00	7.10	6.10	NBR/FABRIC	SRV-2110
E250258302	33.00	25.00	8.00	7.00	NBR/FABRIC	SRV-612
E250258304	35.00	25.00	8.50	7.50	NBR/FABRIC	SRV-908
E250268302	34.00	26.00	6.30	5.30	NBR/FABRIC	SRV-1996
E250268301	34.00	26.00	6.50	5.50	NBR/FABRIC	SRV-1090
E250288502	36.00	28.00	6.70	5.70	FKM/FABRIC	SRV-2180

Part No.	D (H11)	d (f8)	L (+0.2)	H	Material	Mould No.
E250288501	36.00	28.00	6.80	5.80	FKM/FABRIC	SRV-1061
E250288304	36.00	28.00	7.00	6.00	NBR/FABRIC	SRV-398
E250288303	36.00	28.00	8.00	7.00	NBR/FABRIC	SRV-909
E250308306	40.00	30.00	7.50	6.50	NBR/FABRIC	SRV-2109
E250328304	40.00	32.00	7.00	6.00	NBR/FABRIC	SRV-779
E250328302	40.00	32.00	8.00	7.00	NBR/FABRIC	SRV-385
E250328305	40.00	32.00	9.00	8.00	NBR/FABRIC	SRV-2003
E250358304	42.00	35.00	8.00	7.00	NBR/FABRIC	SRV-926
E250358307	43.00	35.00	7.00	6.00	NBR/FABRIC	SRV-1594
E250358302	43.00	35.00	8.00	7.00	NBR/FABRIC	SRV-626
E250358309	43.00	35.00	8.30	7.30	NBR/FABRIC	SRV-2233
E250358306	45.00	35.00	8.00	7.00	NBR/FABRIC	SRV-1461
E250358308	45.00	35.00	8.50	7.50	NBR/FABRIC	SRV-2120
E250358305	45.00	35.00	9.50	8.50	NBR/FABRIC	SRV-1088
E250358501	50.00	35.00	13.00	12.00	FKM/FABRIC	SRV-1471
E250368303	43.00	36.00	7.00	6.00	NBR/FABRIC	SRV-1103
E250368304	44.00	36.00	6.90	5.90	NBR/FABRIC	SRV-1297
E250408502	48.00	40.00	6.80	5.80	FKM/FABRIC	SRV-1869
E250408315	48.00	40.00	7.00	6.00	NBR/FABRIC	SRV-409
E250408318	48.00	40.00	7.00	6.00	NBR/FABRIC	SRV-1593
E250408311	48.00	40.00	7.40	6.40	NBR/FABRIC	SRV-936
E250408319	48.00	40.00	8.00	7.00	NBR/FABRIC	SRV-2106
E250408503	50.00	40.00	7.00	6.00	FKM/FABRIC	SRV-2213
E250408501	50.00	40.00	8.50	7.50	FKM/FABRIC	SRV-1366
E250408313	50.00	40.00	9.50	8.50	NBR/FABRIC	SRV-1246
E250408317	52.00	40.00	9.60	8.60	NBR/FABRIC	SRV-1453
E250408308	55.00	40.00	11.00	10.00	NBR/FABRIC	SRV-891
E250408312	58.00	40.00	12.50	11.50	NBR/FABRIC	SRV-949
E250408316	60.00	40.00	13.00	12.00	NBR/FABRIC	SRV-640
E250408314	60.00	40.00	15.70	14.70	NBR/FABRIC	SRV-1282
E250428304	50.00	42.00	7.40	6.40	NBR/FABRIC	SRV-923
E250420901	50.00	42.00	8.50	7.50	NBR	SRV-1937
E250428305	52.00	42.00	9.50	8.50	NBR/FABRIC	SRV-1600
E250458502	53.00	45.00	9.00	8.00	FKM/FABRIC	SRV-468
E250458502	53.00	45.00	9.00	8.00	FKM/FABRIC	SRV-1152
E250458305	53.00	45.00	9.00	8.00	NBR/FABRIC	SRV-1235
E250458302	55.00	45.00	8.50	7.50	NBR/FABRIC	SRV-633
E250458301	55.00	45.00	11.00	10.00	NBR/FABRIC	SRV-540
E250458307	60.00	45.00	9.00	8.00	NBR/FABRIC	SRV-2126
E250458306	60.00	45.00	13.50	12.50	NBR/FABRIC	SRV-1631
E250458304	60.00	45.00	15.00	14.00	NBR/FABRIC	SRV-1081
E250478301	57.00	47.00	10.00	9.00	NBR/FABRIC	SRV-1424
E250508313	60.00	50.00	8.00	7.00	NBR/FABRIC	SRV-2225
E250508308	60.00	50.00	8.50	7.50	NBR/FABRIC	SRV-733
E250508311	60.00	50.00	10.50	9.50	NBR/FABRIC	SRV-1021
E250508506	62.00	50.00	10.00	9.00	FKM	SRV-2174
E250508310	62.00	50.00	11.00	10.00	NBR/FABRIC	SRV-412
E250508306	62.00	50.00	11.00	10.00	NBR/FABRIC	SRV-1223
E250508504	65.00	50.00	11.00	10.00	FKM/FABRIC	SRV-1364
E250508503	70.00	50.00	12.50	11.50	FKM/FABRIC	SRV-1268
E250506501	60.73	50.80	6.56	5.56	FKM/FABRIC	SRV-174
E250508312	76.20	50.80	14.30	13.30	NBR/FABRIC	SRV-1348

Bold sizes are readily available in stock.
Other materials are available on request.

MAX SPARE LIMITED
QUALITY. PRECISION. SPEED.

E25

Single Acting Symmetrical Seal

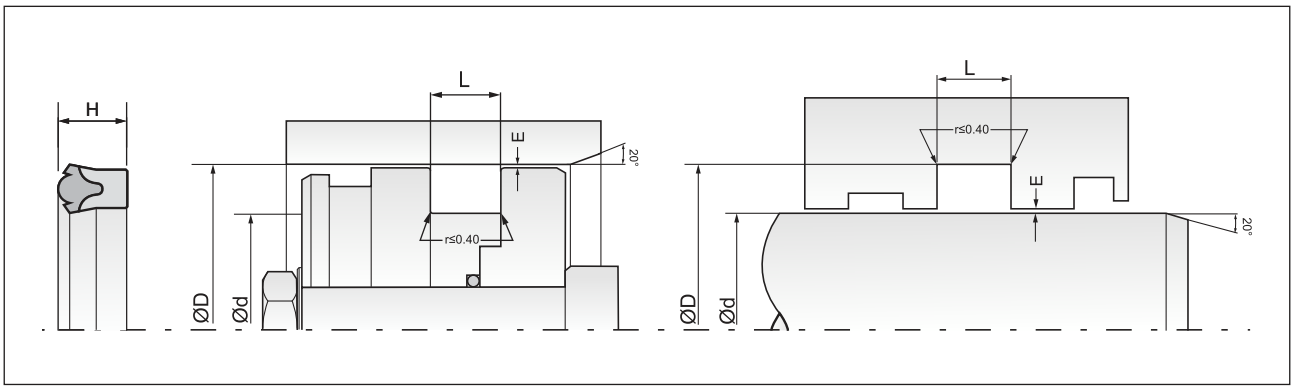

Part No.	D (H11)	d (f8)	L (+0.2)	H	Material	Mould No.
E250528301	62.00	52.00	8.00	7.00	NBR/FABRIC	SRV-1567
E25054L501	64.00	54.00	9.30	8.30	PU	PPA-1674
E250558304	65.00	55.00	8.30	7.30	NBR/FABRIC	SRV-1893
E250558303	65.00	55.00	8.50	7.50	NBR/FABRIC	SRV-1410
E250558305	65.00	55.00	8.50	7.50	NBR/FABRIC	SRV-1934
E250558302	65.00	55.00	9.00	8.00	NBR/FABRIC	SRV-1147
E250558502	67.00	55.00	10.00	9.00	FKM/FABRIC	SRV-1506
E250558501	67.00	55.00	12.00	11.00	FKM/FABRIC	SRV-1190
E250568302	66.00	56.00	8.00	7.00	NBR/FABRIC	SRV-1165
E250568504	68.00	56.00	11.00	10.00	FKM	SRV-1822
E250608501	70.00	60.00	8.50	7.50	FKM/FABRIC	SRV-1241
E250608502	70.00	60.00	8.50	7.50	FKM/FABRIC	SRV-1523
E250608307	70.00	60.00	8.50	7.50	NBR/FABRIC	SRV-658
E250608301	75.00	60.00	11.00	10.00	NBR/FABRIC	SRV-838
E250608308	82.00	60.00	12.00	11.00	NBR/FABRIC	SRV-2001
E250638501	75.00	63.00	10.00	9.00	FKM/FABRIC	SRV-1826
E250658308	75.00	65.00	8.40	7.40	NBR	SRV-1710
E250658305	75.00	65.00	8.50	7.50	NBR/FABRIC	SRV-1215
E250658304	77.00	65.00	9.60	8.60	NBR/FABRIC	SRV-935
E250658304	77.00	65.00	10.60	9.60	NBR/FABRIC	SRV-1074
E250658306	85.00	65.00	8.50	7.50	NBR/FABRIC	SRV-1357
E250688302	80.00	68.00	11.50	10.50	NBR/FABRIC	SRV-1115
E250708501	80.00	70.00	12.40	11.40	FKM/FABRIC	SRV-1192
E250708306	82.00	70.00	8.50	7.50	NBR/FABRIC	SRV-154
E250708304	82.00	70.00	10.00	9.00	NBR/FABRIC	SRV-1310
E250708305	90.00	70.00	10.00	9.00	NBR/FABRIC	SRV-1358
E250708307	90.00	70.00	13.50	12.50	NBR/FABRIC	SRV-1606
E250708309	90.00	70.00	14.80	13.80	NBR/FABRIC	SRV-2214
E250708308	90.00	70.00	17.00	16.00	NBR/FABRIC	SRV-1843
E250758301	87.00	75.00	10.50	9.50	NBR/FABRIC	SRV-1696
E250758302	100.00	75.00	21.00	20.00	NBR/FABRIC	SRV-1844
E250808307	92.00	80.00	9.80	8.80	NBR/FABRIC	SRV-1302
E250808505	92.00	80.00	10.00	9.00	FKM/FABRIC	SRV-1541
E250808305	92.00	80.00	10.00	9.00	NBR/FABRIC	SRV-649
E250808503	92.00	80.00	11.00	10.00	FKM/FABRIC	SRV-1219
E250808504	95.00	80.00	12.30	11.30	FKM/FABRIC	SRV-1267
E250808306	95.00	80.00	13.00	12.00	NBR/FABRIC	SRV-1227
E250808501	95.00	80.00	13.50	12.50	FKM/FABRIC	SRV-934
E250808308	100.00	80.00	13.50	12.50	NBR/FABRIC	SRV-1607
E250851001	97.00	85.00	10.00	9.00	NBR/FABRIC	SRV-1933
E250858304	97.00	85.00	10.00	9.00	NBR/FABRIC	SRV-1532
E250858301	100.00	85.00	13.00	12.00	NBR/FABRIC	SRV-1897
E250858305	105.00	85.00	10.00	9.00	NBR/FABRIC	SRV-1993
E250878301	102.40	87.00	12.00	11.00	NBR/FABRIC	SRV-948
E250881101	100.72	88.90	7.98	6.98	NBR	SRV-1898
E250908305	102.00	90.00	9.60	8.60	NBR/FABRIC	SRV-1339
E250908503	102.00	90.00	10.00	9.00	FKM/FABRIC	SRV-1290
E250908307	102.00	90.00	10.50	9.50	NBR/FABRIC	SRV-1697
E250908506	102.00	90.00	11.00	10.00	FKM/FABRIC	SRV-1935
E250908304	105.00	90.00	12.30	11.30	NBR/FABRIC	SRV-629
E250908301	105.00	90.00	13.00	12.00	NBR/FABRIC	SRV-780
E250908306	110.00	90.00	13.50	12.50	NBR/FABRIC	SRV-1632

Part No.	D (H11)	d (f8)	L (+0.2)	H	Material	Mould No.
E250908505	120.00	90.00	24.70	23.70	FKM/FABRIC	SRV-1415
E250951101	107.07	95.25	7.98	6.98	NBR	SRV-2108
E25095D601	107.95	95.25	10.52	9.52	HNBR/FABRIC	SRV-1518
E251008303	110.00	100.00	8.50	7.50	NBR/FABRIC	SRV-1216
E251008306	110.00	100.00	8.50	7.50	NBR/FABRIC	SRV-2215
E251008301	115.00	100.00	12.30	11.30	NBR/FABRIC	SRV-424
E251008304	115.00	100.00	12.30	11.30	NBR/FABRIC	SRV-1502
E251008302	115.00	100.00	13.00	12.00	NBR/FABRIC	SRV-845
E251008305	116.00	100.00	15.00	14.00	NBR/FABRIC	SRV-1757
E251011101	113.42	101.60	7.98	6.98	NBR	SRV-1890
E251011102	113.42	101.60	11.16	10.16	NBR	SRV-1889
E251011103	114.30	101.60	7.98	6.98	NBR	SRV-2184
E251058501	120.00	105.00	12.50	11.50	NBR/FABRIC	SRV-2198
E251058302	125.00	105.00	10.50	9.50	NBR/FABRIC	SRV-1078
E251108502	125.00	110.00	12.00	11.00	FKM/FABRIC	SRV-1062
E251108308	125.00	110.00	12.30	11.30	NBR/FABRIC	SRV-1737
E251108306	125.00	110.00	13.00	12.00	NBR/FABRIC	SRV-951
E251128301	131.00	112.00	17.00	16.00	NBR/FABRIC	SRV-1066
E25114S401	127.00	114.30	7.90	6.90	HNBR	SRV-1373
E251141102	127.00	114.30	7.98	6.98	NBR	SRV-1780
E251141101	127.00	114.30	11.16	10.16	NBR	SRV-1761
E251141103	127.00	114.30	15.90	14.90	NBR	SRV-1785
E261158302	130.00	115.00	12.00	11.00	NBR/FABRIC	SRV-1551
E251158301	135.00	115.00	10.00	9.00	NBR/FABRIC	SRV-1359
E251208303	135.00	120.00	9.50	8.50	NBR/FABRIC	SRV-962
E251208302	135.00	120.00	12.30	11.30	NBR/FABRIC	SRV-924
E251208301	140.00	120.00	17.00	16.00	NBR/FABRIC	SRV-847
E251208304	130.17	120.65	10.52	9.52	NBR/FABRIC	SRV-1980
E251258301	140.00	125.00	12.30	11.30	NBR/FABRIC	SRV-691
E251258302	145.00	125.00	19.00	18.00	NBR/FABRIC	SRV-1850
E251271101	138.83	127.00	7.98	6.98	NBR	SRV-1883
E251271102	138.83	127.00	11.16	10.16	NBR	SRV-1884
E251358301	150.00	135.00	11.00	10.00	NBR/FABRIC	SRV-1462
E251408501	150.00	140.00	12.40	11.40	FKM/FABRIC	SRV-1193
E251408304	160.00	140.00	16.00	15.00	NBR/FABRIC	SRV-639
E251408302	160.00	140.00	17.00	16.00	NBR/FABRIC	SRV-846
E251508301	165.00	150.00	12.00	11.00	NBR/FABRIC	SRV-1931
E251602201	180.00	160.00	16.00	15.00	NBR/FABRIC	SRV-242
E251608302	180.00	160.00	17.00	16.00	NBR/FABRIC	SRV-1270
E251718301	185.00	171.00	12.00	11.00	NBR/FABRIC	SRV-1930
E252008305	220.00	200.00	16.00	15.00	NBR/FABRIC	SRV-1973
E252208302	240.00	220.00	16.00	15.00	NBR/FABRIC	SRV-2202
E252208301	250.00	220.00	25.00	24.00	NBR/FABRIC	SRV-848
E252258301	240.00	225.00	16.00	15.00	NBR/FABRIC	SRV-1271
E252408301	260.00	240.00	16.00	15.00	NBR/FABRIC	SRV-1084
E25270D601	300.00	270.00	23.50	22.50	HNBR/FABRIC	SRV-1371
E252758301	300.00	275.00	20.00	19.00	NBR/FABRIC	SRV-2132
E253001001	320.00	300.00	16.00	15.00	NBR/FABRIC	SRV-1977
E253008302	330.00	300.00	22.50	21.50	NBR/FABRIC	SRV-2199
E253218305	335.00	321.00	16.00	15.00	NBR/FABRIC	SRV-1972
E25400D601	430.00	400.00	23.50	22.50	HNBR/FABRIC	SRV-1372
E259991002	1568.45	1530.35	22.97	21.97	NBR	SLO-752

Bold sizes are readily available in stock.
Other materials are available on request.

E16

Single Acting Symmetrical Seal

DETAILS

E16 seal is a single acting robust design seal used for medium to heavy duty applications. This seal comprises of a rubberised fabric U seal base bonded to a rubber energiser and it needs split housing. The seal section is pre-loaded by the housing when installed to ensure effective sealing at low pressure. When the pressure increases, the nitrile energizes the fabric to increase the sealing area and hence improving the efficiency of the seal. The strength and durability of the rubberized fabric combines with its ability to retain lubricant keeping friction and wear to a minimum.

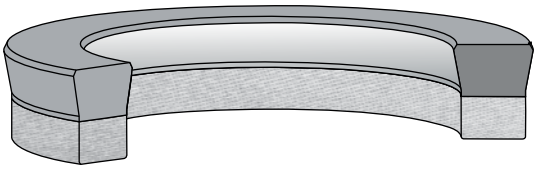

COMPATIBILITY

Mineral oils, bio oils, water soluble & water glycol fluids.

MATERIAL

Nitrile Rubber with fabric reinforcement 80/85 Shore A
FKM with fabric reinforcement 80/85 Shore A

APPLICATION

- Low to heavy duty hydraulic presses.
- Valves spindles.
- Mobile hydraulic presses.

OPERATING CONDITIONS

Temperature Range	:	-20°C to + 100°C (NBR)
	:	-20°C to + 220°C (FKM)
Pressure	:	250 Bar
Speed	:	0.5 m/s

FEATURES

- Excellent sealability during low & high pressure.
- Long service life.
- Good chemical resistance.
- Small cross section.
- Wide range of sizes available.

SURFACE ROUGHNESS

Static	:	0.8 µmRa
Dynamic	:	0.4 µmRa

INSTALLATION & ASSEMBLY

Careful installation is a prerequisite for the correct functioning of the seal. E16 seal requires split housing. In order to avoid damage during installation, load-in-chanfer of min. 5 x 20° must be provided on the rods and the seal groove must be free from pores, scratches etc.

PERMISSIBLE EXTRUSION GAP	E max (mm)
150 Bar	0.40
250 Bar	0.30

E16

Single Acting Symmetrical Seal

MAX SPARE LIMITED
QUALITY. PRECISION. SPEED.

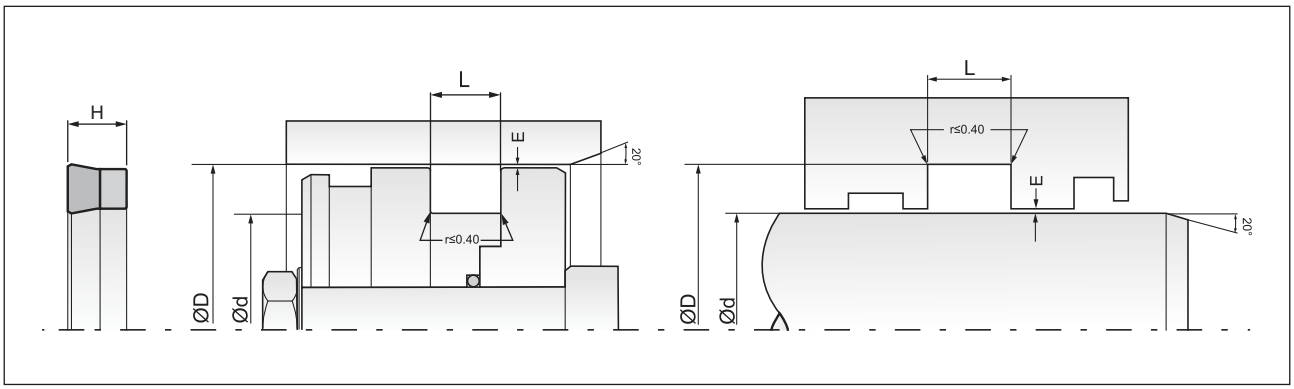

Part No.	D (H11)	d (f8)	L (+0.2)	H	Material	Mould No.
E16006L502	9.00	6.00	5.00	4.00	PU	PPA-2035
E16005L502	10.00	5.00	5.00	4.00	PU	PUA-545
E16005L501	11.00	5.00	5.50	4.50	PU	PPA-1064
E160058302	12.00	5.00	6.00	5.00	NBR/FABRIC	SRV-1667
E160058303	12.00	5.70	7.00	6.00	NBR/FABRIC	SRV-1692
E16006L501	12.00	6.00	6.00	5.00	HYTREL	PPA-368
E160069001	12.00	6.00	8.00	7.00	NBR/FABRIC	SRV-2115
E16007L501	12.00	7.00	6.00	5.00	PU	PPA-2835
E160068701	12.70	6.40	4.00	3.00	PU	PPA-2784
E16007L502	12.70	7.40	4.00	3.00	PU	PPA-2998
E16007L503	12.75	7.42	7.00	6.00	PU	PPA-3372
E160080801	13.50	8.50	5.80	4.80	NBR	SRV-2237
E160068302	14.00	6.00	6.90	5.90	NBR/FABRIC	SRV-938
E160068304	14.00	6.00	7.00	6.00	NBR/FABRIC	SRV-2008
E160068303	14.28	6.35	7.30	6.30	NBR/FABRIC	SRV-1522
E160088302	15.00	8.00	7.00	6.00	NBR/FABRIC	SRV-1266
E160088303	15.00	8.00	8.00	7.00	NBR/FABRIC	SRV-1711
E16009L501	15.85	9.50	9.00	8.00	PU	PPA-3055
E16008K201	16.00	8.00	8.00	7.00	HYTREL	PPA-1378
E160108401	17.00	10.00	6.80	5.80	NBR/FABRIC	SRV-1089
E160108302	17.00	10.00	7.50	6.50	NBR/FABRIC	SRV-961
E16012L501	17.00	12.00	5.00	4.00	PU	PPA-707
E160108303	18.00	10.00	6.40	5.40	NBR/FABRIC	SRV-1535
E160108304	18.00	10.00	6.60	5.60	NBR/FABRIC	SRV-1568
E160128309	18.00	12.00	8.00	7.00	NBR/FABRIC	SRV-1141
E161008306	18.00	100.00	12.50	11.50	NBR/FABRIC	SRV-1323
E160108305	19.00	10.00	8.00	7.00	NBR/FABRIC	SRV-1712
E160128301	19.00	12.00	6.30	5.30	NBR/FABRIC	SRV-1854
E160128307	19.00	12.00	6.80	5.80	NBR/FABRIC	SRV-1077
E160128305	19.00	12.00	7.30	6.30	NBR/FABRIC	SRV-783
E160128312	19.00	12.80	6.00	5.00	NBR/FABRIC	SRV-1609
E160098301	19.05	9.52	7.80	6.80	NBR/FABRIC	SRV-2007
E160129001	19.05	12.70	5.30	4.30	NBR/FABRIC	SRV-2119
E160128308	19.05	12.70	5.76	4.76	NBR/FABRIC	SRV-1086
E160128501	19.05	12.70	5.76	4.76	FKM/FABRIC	SRV-1386
E160128313	20.00	12.00	6.80	5.80	NBR/FABRIC	SRV-2006
E160128310	20.00	12.00	7.30	6.30	NBR/FABRIC	SRV-1240
E160158304	20.00	15.00	6.50	5.50	NBR/FABRIC	SRV-843
E160123401	20.57	12.70	6.56	5.56	EPDM/FABRIC	SRV-2111
E160128314	20.63	12.70	7.85	6.85	NBR/FABRIC	SRV-784
E16007X402	21.00	7.00	2.60	1.60	PU	PPA-2818
E160078901	21.00	7.00	4.00	3.00	PU	PPA-2182
E160158501	21.20	15.00	6.80	5.80	FKM/FABRIC	SRV-1303
E160108501	22.00	10.00	9.00	8.00	FKM/FABRIC	SRV-1633
E160148307	22.00	14.00	6.50	5.50	NBR/FABRIC	SRV-1354
E160148303	22.00	14.00	6.90	5.90	NBR/FABRIC	SRV-719
E160148306	22.00	14.00	7.00	6.00	NBR/FABRIC	SRV-2113
E160148108	22.00	14.00	7.50	6.50	NBR/FABRIC	SRV-1148
E16015V201	22.00	15.00	6.80	5.80	NBR	SRV-1878
E160168304	22.00	16.00	6.00	5.00	NBR/FABRIC	SRV-1352
E160128311	22.22	12.70	7.40	6.40	NBR/FABRIC	SRV-1394
E160128315	22.22	12.70	8.00	7.00	NBR/FABRIC	SRV-2005

Part No.	D (H11)	d (f8)	L (+0.2)	H	Material	Mould No.
E160128315	22.22	12.70	8.00	7.00	NBR/FABRIC	SRV-2005
E160158302	22.22	15.87	5.80	4.80	NBR/FABRIC	SRV-786
E160158303	23.00	15.00	6.80	5.80	NBR/FABRIC	SRV-785
E160168504	23.00	16.00	5.00	4.00	FKM/FABRIC	SRV-1557
E160188303	23.00	18.00	5.50	4.50	NBR/FABRIC	SRV-764
E160148304	24.00	14.00	7.50	6.50	NBR/FABRIC	SRV-944
E160168501	24.00	16.00	6.70	5.70	FKM/FABRIC	SRV-928
E160168503	24.00	16.00	6.90	5.90	FKM/FABRIC	SRV-1378
E160168305	24.00	16.00	7.00	6.00	NBR/FABRIC	SRV-1477
E160168502	24.00	16.00	7.50	6.50	FKM/FABRIC	SRV-1182
E160168303.	24.00	16.00	7.50	6.50	NBR/FABRIC	SRV-2112
E160168306	24.00	16.00	7.80	6.80	NBR/FABRIC	SRV-1700
E160168303	24.00	16.00	8.00	7.00	NBR/FABRIC	SRV-787
E160188305	24.00	18.00	5.60	4.60	NBR/FABRIC	SRV-1231
E160188308	24.00	18.00	5.80	4.80	NBR/FABRIC	SRV-2018
E16013L501	25.00	13.00	8.50	7.50	PU	PPA-2127
E160163401	25.00	16.00	8.50	7.50	EPDM/FABRIC	SRV-1974
E160188309	25.00	18.00	8.30	7.30	NBR/FABRIC	SRV-2019
E160188307	25.00	18.00	9.00	8.00	NBR/FABRIC	SRV-1355
E16020L501	25.00	20.00	5.00	4.00	PU	PPA-708
E160151001	25.40	15.87	7.50	6.50	NBR/FABRIC	SRV-1976
E160158306	25.40	15.87	8.00	7.00	NBR/FABRIC	SRV-1233
E160158305	25.40	15.87	8.13	7.13	NBR/FABRIC	SRV-1186
E160198305	25.40	19.05	5.76	4.76	NBR/FABRIC	SRV-1128
E160168310	26.00	16.00	8.00	7.00	NBR/FABRIC	SRV-1966
E160168311	26.00	16.00	8.50	7.50	NBR/FABRIC	SRV-2118
E160188501	26.00	18.00	6.70	5.70	FKM/FABRIC	SRV-644
E160188502	26.00	18.00	6.80	5.80	FKM/FABRIC	SRV-1160
E160188310	26.00	18.00	6.80	5.80	NBR/FABRIC	SRV-2020
E160188504	26.00	18.00	6.90	5.90	FKM/FABRIC	SRV-1901
E160188306	26.00	18.00	7.50	6.50	NBR/FABRIC	SRV-1237
E160188311	26.00	18.00	7.50	6.50	NBR/FABRIC	SRV-2021
E160188304	26.00	18.00	8.00	7.00	NBR/FABRIC	SRV-788
E160198308	26.00	19.00	7.00	6.00	NBR/FABRIC	SRV-1356
E160208321	26.00	20.00	6.00	5.00	NBR/FABRIC	SRV-2023
E160208502	26.20	20.00	6.80	5.80	FKM/FABRIC	SRV-1304
E160198304	27.00	19.00	6.00	5.00	NBR/FABRIC	SRV-992
E160208311	27.00	20.00	6.40	5.40	NBR/FABRIC	SRV-1085
E160208316	27.00	20.00	6.50	5.50	NBR/FABRIC	SRV-1811
E160208322	27.00	20.00	6.90	5.90	NBR/FABRIC	SRV-2017
E160208320	27.00	20.00	7.00	6.00	NBR/FABRIC	SRV-1956
E160208311	27.00	20.00	7.00	6.00	NBR/FABRIC	SRV-1067
E160188312	28.00	18.00	6.80	5.80	NBR/FABRIC	SRV-2022
E160208312	28.00	20.00	6.30	5.30	NBR/FABRIC	SRV-1291
E160208501	28.00	20.00	6.70	5.70	FKM/FABRIC	SRV-853
E160208304	28.00	20.00	6.70	5.70	NBR/FABRIC	SRV-789
E160208503	28.00	20.00	7.00	6.00	FKM/FABRIC	SRV-1872
E160208323	28.00	20.00	7.00	6.00	NBR/FABRIC	SRV-2016
E160208313	28.00	20.00	7.40	6.40	NBR/FABRIC	SRV-595
E16022V201	28.00	22.00	6.80	5.80	NBR	SRV-1871
E16198307	28.50	19.00	9.00	8.00	NBR/FABRIC	SRV-1353
E160208310	30.00	20.00	7.00	6.00	NBR/FABRIC	SRV-993

Bold sizes are readily available in stock.
Other materials are available on request.

E16

Single Acting Symmetrical Seal

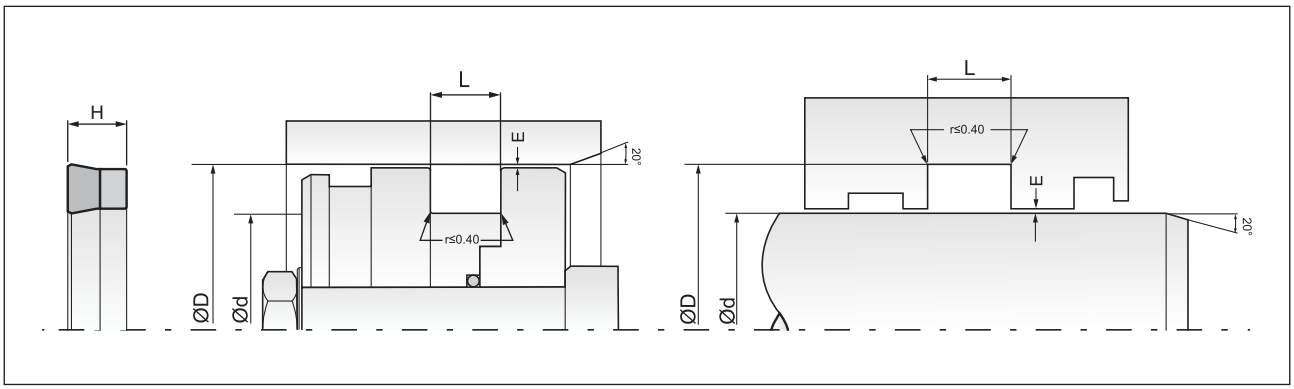

Part No.	D (H11)	d (f8)	L (+0.2)	H	Material	Mould No.
E160208324	30.00	20.00	8.60	7.60	NBR/FABRIC	SRV-2015
E160208308	30.00	20.00	8.60	7.60	NBR/FABRIC	SRV-525
E160208314	30.00	20.00	9.00	8.00	NBR/FABRIC	SRV-698
E160208326	30.00	20.00	9.00	8.00	NBR/FABRIC	SRV-2102
E160228308	30.00	22.00	6.00	5.00	NBR/FABRIC	SRV-1351
E160228501	30.00	22.00	6.70	5.70	FKM/FABRIC	SRV-895
E160228301	30.00	22.00	6.90	5.90	NBR/FABRIC	SRV-710
E160228504	30.00	22.00	6.90	5.90	FKM/FABRIC	SRV-1766
E160228314	30.00	22.00	7.00	6.00	NBR/FABRIC	SRV-2012
E160228302	30.00	22.00	7.50	6.50	NBR/FABRIC	SRV-1957
E160228306	30.00	22.00	7.50	6.50	NBR/FABRIC	SRV-790
E160228307	30.00	22.00	7.50	6.50	NBR/FABRIC	SRV-1238
E160228502	30.00	22.00	7.50	6.50	FKM/FABRIC	SRV-1365
E160228310	30.00	22.00	9.00	8.00	NBR/FABRIC	SRV-1628
E160178301	30.16	17.46	10.20	9.20	NBR/FABRIC	SRV-2024
E160258503	31.20	25.00	6.80	5.80	FKM/FABRIC	SRV-1305
E160198302	31.75	19.05	8.70	7.70	NBR/FABRIC	SRV-686
E160198301	31.75	19.05	8.80	7.80	NBR/FABRIC	SRV-1900
E160228313	31.75	22.09	9.00	8.00	NBR/FABRIC	SRV-1908
E160228316	31.75	22.22	9.60	8.60	NBR/FABRIC	SRV-2010
E160258310	31.75	25.40	5.65	4.65	NBR/FABRIC	SRV-1879
E160258344	31.75	25.40	5.70	4.70	NBR/FABRIC	SRV-2026
E160208315	32.00	20.00	10.60	9.60	NBR/FABRIC	SRV-1797
E160228303	32.00	22.00	7.00	6.00	NBR/FABRIC	SRV-1563
E160228315	32.00	22.00	7.80	6.80	NBR/FABRIC	SRV-2011
E160228304	32.00	22.00	8.00	7.00	NBR/FABRIC	SRV-1569
E160248306	32.00	24.00	7.40	6.40	NBR/FABRIC	SRV-2013
E160248305	32.00	24.00	7.50	6.50	NBR/FABRIC	SRV-1967
E160258331	32.00	25.00	6.50	5.50	NBR/FABRIC	SRV-1795
E160258343	32.00	25.00	6.80	5.80	NBR/FABRIC	SRV-2025
E160258325	32.00	25.00	7.00	6.00	NBR/FABRIC	SRV-1511
E160258326	32.00	25.00	8.00	7.00	NBR/FABRIC	SRV-1512
E160248302	33.00	24.00	7.00	6.00	NBR/FABRIC	SRV-1619
E160258317	33.00	25.00	6.00	5.00	NBR/FABRIC	SRV-994
E160258318	33.00	25.00	6.50	5.50	NBR/FABRIC	SRV-995
E160258340	33.00	25.00	6.50	5.50	NBR/FABRIC	SRV-1836
E160258501	33.00	25.00	6.70	5.70	FKM/FABRIC	SRV-559
E160258316	33.00	25.00	6.80	5.80	NBR/FABRIC	SRV-791
E160258504	33.00	25.00	7.00	6.00	NBR	SRV-615
E160258320	33.00	25.00	7.00	6.00	NBR/FABRIC	SRV-1091
E160258341	33.00	25.00	7.30	6.30	NBR/FABRIC	SRV-1863
E160258329	33.00	25.00	7.40	6.40	NBR/FABRIC	SRV-1678
E160258319	33.00	25.00	7.80	6.80	NBR/FABRIC	SRV-1000
E160258324	33.00	25.00	8.00	7.00	NBR/FABRIC	SRV-1513
E160208325	33.33	20.63	10.20	9.20	NBR/FABRIC	SRV-2014
E160228309	34.00	22.00	10.00	9.00	NBR/FABRIC	SRV-1526
E160248307	34.00	24.00	6.90	5.90	NBR/FABRIC	SRV-2050
E160258330	34.79	25.40	7.09	6.09	NBR/FABRIC	SRV-1783
E160258345	34.92	25.40	7.35	6.35	NBR/FABRIC	SRV-2027
E160258321	34.92	25.40	7.35	6.35	NBR/FABRIC	SRV-1149
E160198309	35.00	20.00	11.60	10.60	NBR/FABRIC	SRV-1560
E160258502	35.00	25.00	9.00	8.00	FKM/FABRIC	SRV-1146

Part No.	D (H11)	d (f8)	L (+0.2)	H	Material	Mould No.
E16027L501	35.00	27.00	6.90	5.90	PU	PPA-709
E160278301	35.00	27.00	6.90	5.90	NBR/FABRIC	SRV-2030
E160288310	36.00	28.00	6.50	5.50	NBR/FABRIC	SRV-1792
E160288501	36.00	28.00	6.70	5.70	FKM/FABRIC	SRV-953
E160288514	36.00	28.00	6.70	5.70	FKM/FABRIC	SRV-2217
E160288304	36.00	28.00	6.80	5.80	NBR/FABRIC	SRV-2031
E16028U201	36.00	28.00	6.80	5.80	FKM/FABRIC	SRV-664
E160288504	36.00	28.00	6.90	5.90	FKM/FABRIC	SRV-1299
E160281101	36.00	28.00	7.00	6.00	NBR/FABRIC	SRV-1634
E160288513	36.00	28.00	7.00	6.00	FKM/FABRIC	SRV-1997
E160288309	36.00	28.00	7.30	6.30	NBR/FABRIC	SRV-1662
E160288302	36.00	28.00	8.30	7.30	NBR/FABRIC	SRV-1438
E160308505	36.20	30.00	6.80	5.80	FKM/FABRIC	SRV-1306
E160238301	36.51	23.81	10.20	9.20	NBR/FABRIC	SRV-2009
E160308304	37.50	30.00	7.00	6.00	NBR/FABRIC	SRV-596
E160308304	37.50	30.00	7.00	6.00	NBR/FABRIC	SRV-2035
E160258505	38.00	25.00	7.50	6.50	FKM/FABRIC	SRV-1347
E160258307	38.00	25.00	10.00	9.00	NBR/FABRIC	SRV-249
E160286501	38.00	28.00	6.50	5.50	FKM/FABRIC	SRV-967
E160288316	38.00	28.00	8.00	7.00	NBR/FABRIC	SRV-2139
E160288505	38.00	28.00	8.40	7.40	FKM/FABRIC	SRV-1379
E160288308	38.00	28.00	8.70	7.70	NBR/FABRIC	SRV-1629
E160308502	38.00	30.00	6.70	5.70	FKM/FABRIC	SRV-894
E160308320	38.00	30.00	6.80	5.80	NBR/FABRIC	SRV-2036
E160308316	38.00	30.00	7.00	6.00	NBR/FABRIC	SRV-1180
E160308312	38.00	30.00	7.80	6.80	NBR/FABRIC	SRV-849
E160308317	38.00	30.00	8.00	7.00	NBR/FABRIC	SRV-1236
E160258328	38.10	25.40	8.00	7.00	NBR/FABRIC	SRV-1599
E160258506	38.10	25.40	8.92	7.92	FKM/FABRIC	SRV-2116
E160258323	38.10	25.40	9.52	8.52	NBR/FABRIC	SRV-1292
E160258508	38.10	25.40	9.80	8.80	FKM/FABRIC	SRV-1861
E160258332	38.10	25.40	9.90	8.90	NBR/FABRIC	SRV-1793
E160258327	38.10	25.40	10.52	9.52	NBR/FABRIC	SRV-1536
E160258322	38.10	25.40	10.52	9.52	NBR/FABRIC	SRV-1178
E160288311	38.10	28.44	5.83	4.83	NBR/FABRIC	SRV-1807
E160318314	38.10	31.75	5.20	4.20	NBR/FABRIC	SRV-2125
E160318311	38.10	31.75	7.20	6.20	NBR/FABRIC	SRV-2039
E160288314	39.68	28.19	8.30	7.30	NBR/FABRIC	SRV-2033
E160258342	40.00	25.00	12.50	11.50	NBR/FABRIC	SRV-1955
E160268301	40.00	26.00	10.20	9.20	NBR/FABRIC	SRV-2029
E160288307	40.00	28.00	9.60	8.60	NBR/FABRIC	SRV-1474
E160308314	40.00	30.00	7.00	6.00	NBR/FABRIC	SRV-1093
E160308504	40.00	30.00	7.50	6.50	FKM/FABRIC	SRV-1200
E160308502	40.00	30.00	7.80	6.80	NBR/FABRIC	SRV-1118
E160308308	40.00	30.00	8.00	7.00	NBR/FABRIC	SRV-531
E160308321	40.00	30.00	8.00	7.00	NBR/FABRIC	SRV-2037
E160304601	40.00	30.00	8.50	7.50	VMQ	SRV-2131
E160308302	40.00	30.00	8.50	7.50	NBR/FABRIC	SRV-794
E160308319	40.00	30.00	9.00	8.00	NBR/FABRIC	SRV-708
E160308305	40.00	30.00	9.00	8.00	NBR/FABRIC	SRV-835
E160308315	40.00	30.00	9.00	8.00	NBR/FABRIC	SRV-1095
E16030L501	40.00	30.00	9.00	8.00	PU	PPA-555

Bold sizes are readily available in stock.
Other materials are available on request.

E16

Single Acting Symmetrical Seal

MAX SPARE LIMITED
QUALITY. PRECISION. SPEED.

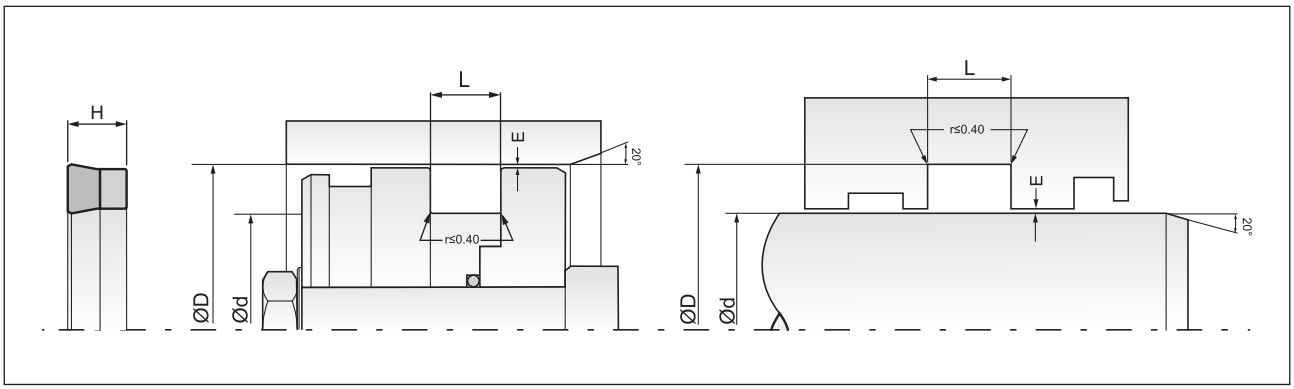

Part No.	D (H11)	d (f8)	L (+0.2)	H	Material	Mould No.
E160328307	40.00	32.00	6.00	5.00	NBR/FABRIC	SRV-1448
E160328312	40.00	32.00	6.50	5.50	NBR	SRV-2153
E160328501	40.00	32.00	6.70	5.70	FKM/FABRIC	SRV-858
E160328311	40.00	32.00	6.70	5.70	NBR/FABRIC	SRV-2041
E160328302	40.00	32.00	6.80	5.80	NBR/FABRIC	SRV-796
E160328305	40.00	32.00	9.50	8.50	NBR/FABRIC	SRV-1670
E160328305	40.00	32.00	10.00	9.00	NBR/FABRIC	SRV-795
E160258303	41.14	25.40	10.92	9.92	NBR/FABRIC	SRV-1896
E160258346	41.27	25.40	11.70	10.70	NBR/FABRIC	SRV-2028
E160288306	41.27	28.57	10.52	9.52	NBR/FABRIC	SRV-1198
E160288317	41.27	28.57	10.52	9.52	NBR/FABRIC	SRV-2197
E160288305	41.27	28.57	11.00	10.00	NBR/FABRIC	SRV-792
E160318308	41.27	31.75	7.82	6.82	NBR/FABRIC	SRV-1786
E160318306	41.27	31.75	8.13	7.13	NBR/FABRIC	SRV-1226
E160308313	41.60	30.00	8.20	7.20	NBR/FABRIC	SRV-910
E160306601	42.00	30.00	6.00	5.00	FKM	SRV-1689
E160308318	42.00	30.00	8.00	7.00	NBR/FABRIC	SRV-1514
E160316601	42.00	31.60	10.00	9.00	FKM	SRV-1218
E160328306	42.00	32.00	8.80	7.80	NBR/FABRIC	SRV-1184
E160328504	42.00	32.00	10.50	9.50	FKM/FABRIC	SRV-1311
E160288313	43.00	28.00	11.50	10.50	NBR/FABRIC	SRV-2032
E160358312	43.00	35.00	6.30	5.30	NBR/FABRIC	SRV-1374
E160358502	43.00	35.00	6.70	5.70	FKM/FABRIC	SRV-857
E160358321	43.00	35.00	6.80	5.80	NBR/FABRIC	SRV-2160
E160358503	43.00	35.00	7.00	6.00	FKM/FABRIC	SRV-1003
E160358310	43.00	35.00	7.00	6.00	NBR/FABRIC	SRV-1251
E160358306	43.00	35.00	7.00	6.00	NBR/FABRIC	SRV-2042
E160352101	43.00	35.00	7.50	6.50	CR	SRV-1845
E160358305	43.00	35.00	7.50	6.50	NBR/FABRIC	SRV-798
E160368302	43.00	36.00	7.00	6.00	NBR/FABRIC	SRV-799
E160378501	43.20	37.00	6.80	5.80	FKM/FABRIC	SRV-1307
E160368506	44.00	36.00	6.50	5.50	FKM/FABRIC	SRV-1830
E160368501	44.00	36.00	6.70	5.70	FKM/FABRIC	SRV-901
E160368502	44.00	36.00	6.90	5.90	FKM/FABRIC	SRV-1181
E160368307	44.00	36.00	6.90	5.90	NBR/FABRIC	SRV-2046
E160368305	44.00	36.00	7.00	6.00	NBR/FABRIC	SRV-1640
E160368504	44.00	36.00	7.90	6.90	FKM/FABRIC	SRV-1381
E160368304	44.00	36.00	9.00	8.00	NBR/FABRIC	SRV-1630
E160288315	44.45	28.57	11.50	10.50	NBR/FABRIC	SRV-2034
E160318313	44.45	31.75	9.82	8.82	NBR/FABRIC	SRV-2105
E160318312	44.45	31.75	10.00	9.00	NBR/FABRIC	SRV-2040
E160318307	44.45	31.75	10.52	9.52	NBR/FABRIC	SRV-1243
E160348303	44.45	34.79	7.60	6.60	NBR/FABRIC	SRV-1775
E160348302	44.45	34.79	8.11	7.11	NBR/FABRIC	SRV-1760
E160348304	44.45	34.92	7.41	6.41	NBR/FABRIC	SRV-1877
E16	45.00	25.00	11.00	10.00	FKM/FABRIC	SRV-1420
E160288312	45.00	28.00	12.40	11.40	NBR/FABRIC	SRV-1968
E160291001	45.00	29.00	12.00	11.00	NBR/FABRIC	SRV-1738
E160301001	45.00	30.00	9.30	8.30	NBR/FABRIC	SRV-1913
E160308311	45.00	30.00	9.50	8.50	NBR/FABRIC	SRV-2038
E160308507	45.00	30.00	12.00	11.00	FKM/FABRIC	SRV-1982
E160328308	45.00	32.00	11.00	10.00	NBR/FABRIC	SRV-1531

Part No.	D (H11)	d (f8)	L (+0.2)	H	Material	Mould No.
E160358308	45.00	35.00	7.00	6.00	NBR/FABRIC	SRV-1096
E160358307	45.00	35.00	7.50	6.50	NBR/FABRIC	SRV-937
E160358309	45.00	35.00	8.00	7.00	NBR/FABRIC	SRV-1098
E160358302	45.00	35.00	8.20	7.20	NBR/FABRIC	SRV-533
E160358320	45.00	35.00	8.20	7.20	NBR/FABRIC	SRV-2043
E160358505	45.00	35.00	8.30	7.30	FKM/FABRIC	SRV-1768
E160358504	45.00	35.00	8.50	7.50	FKM/FABRIC	SRV-1601
E160358302	45.00	35.00	9.00	8.00	NBR/FABRIC	SRV-797
E160358302	45.00	35.00	9.00	8.00	NBR/FABRIC	SRV-834
E160358316	45.00	35.00	13.80	12.80	NBR/FABRIC	SRV-2044
E16037L501	45.00	37.00	6.90	5.90	PU	PPA-710
E160368503	46.00	36.00	8.80	7.80	FKM/FABRIC	SRV-1377
E160368303	46.00	36.00	9.00	8.00	NBR/FABRIC	SRV-1150
E160318310	47.49	31.75	11.20	10.20	NBR/FABRIC	SRV-1828
E160380307	47.62	38.10	7.35	6.35	NBR/FABRIC	SRV-1137
E160368306	48.00	36.00	9.20	8.20	NBR/FABRIC	SRV-1801
E160408504	48.00	40.00	6.70	5.70	FKM/FABRIC	SRV-952
E160408313	48.00	40.00	6.80	5.80	NBR/FABRIC	SRV-1515
E160408308	48.00	40.00	7.00	6.00	NBR/FABRIC	SRV-1092
E160408301	48.00	40.00	7.00	6.00	NBR/FABRIC	SRV-561
E16040L501	48.00	40.00	7.00	6.00	PU	PPA-580
E160408314	48.00	40.00	7.50	6.50	NBR/FABRIC	SRV-1636
E160408321	48.00	40.00	8.00	7.00	NBR/FABRIC	SRV-2048
E160408302	48.00	40.00	9.00	8.00	NBR/FABRIC	SRV-1321
E16030L502	50.00	30.00	12.30	11.30	PU	PPA-1065
E160358315	50.00	35.00	10.00	9.00	NBR/FABRIC	SRV-1960
E16035L501	50.00	35.00	10.00	9.00	PU	PPA-3205
E160358313	50.00	35.00	11.50	10.50	NBR/FABRIC	SRV-1777
E160358317	50.00	35.00	11.80	10.80	NBR/FABRIC	SRV-2045
E16358303	50.00	35.00	12.50	11.50	NBR/FABRIC	SRV-572
E160388312	50.00	38.00	9.80	8.80	NBR/FABRIC	SRV-2047
E160406501	50.00	40.00	6.50	5.50	FKM/FABRIC	SRV-1383
E160408316	50.00	40.00	6.50	5.50	NBR/FABRIC	SRV-1808
E160408309	50.00	40.00	7.00	6.00	NBR/FABRIC	SRV-1097
E160408327	50.00	40.00	7.80	6.80	NBR/FABRIC	SRV-2183
E160408323	50.00	40.00	8.00	7.00	NBR/FABRIC	SRV-2154
E160408320	50.00	40.00	8.30	7.30	NBR/FABRIC	SRV-1959
E160408306	50.00	40.00	8.40	7.40	NBR/FABRIC	SRV-801
E160408315	50.00	40.00	10.00	9.00	NBR/FABRIC	SRV-1665
E160408507	50.00	40.00	10.80	9.80	FKM/FABRIC	SRV-1784
E160408310	50.00	40.00	11.00	10.00	NBR/FABRIC	SRV-1099
E160408502	50.00	40.00	11.00	10.00	FKM/FABRIC	SRV-856
E160408303	50.00	40.00	11.50	10.50	NBR/FABRIC	SRV-1564
E160408322	50.00	40.00	13.80	12.80	NBR/FABRIC	SRV-2049
E160428301	50.00	42.00	7.00	6.00	NBR/FABRIC	SRV-802
E160318309	50.80	31.75	13.00	12.00	NBR/FABRIC	SRV-1789
E160348307	50.80	34.92	10.30	9.30	NBR/FABRIC	SRV-2191
E160348501	50.80	34.92	11.00	10.00	FKM/FABRIC	SRV-1860
E160348306	50.80	34.92	11.80	10.80	NBR/FABRIC	SRV-2051
E160378301	50.80	37.72	9.20	8.20	NBR/FABRIC	SRV-2053
E160388309	50.80	38.10	9.52	8.52	NBR/FABRIC	SRV-1756
E160388311	50.80	38.10	10.13	9.13	NBR/FABRIC	SRV-1787

Bold sizes are readily available in stock.
Other materials are available on request.

E16

Single Acting Symmetrical Seal

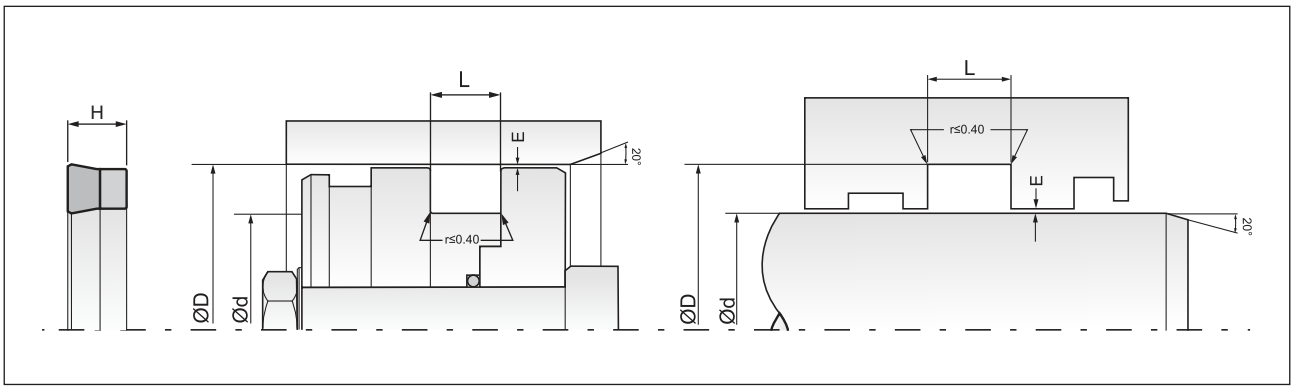

Part No.	D (H11)	d (f8)	L (+0.2)	H	Material	Mould No.
E160388306	50.80	38.10	10.52	9.52	NBR/FABRIC	SRV-1125
E160388308	50.80	38.10	10.52	9.52	NBR/FABRIC	SRV-1194
E160388304	50.80	38.10	12.90	11.90	NBR/FABRIC	SRV-2070
E160368308	51.00	36.00	11.40	10.40	NBR/FABRIC	SRV-2052
E160328310	52.00	32.00	12.40	11.40	NBR/FABRIC	SRV-1969
E160438301	53.00	43.00	9.40	8.40	NBR/FABRIC	SRV-2067
E160436601	53.00	43.00	10.00	9.00	FKM	SRV-1217
E160438501	53.00	43.00	10.00	9.00	FKM/FABRIC	SRV-1199
E160448310	53.00	44.00	7.00	6.00	NBR/FABRIC	SRV-1992
E160448501	53.00	44.00	10.00	9.00	FKM/FABRIC	SRV-1276
E160458315	53.00	45.00	6.50	5.50	NBR/FABRIC	SRV-1986
E160458507	53.00	45.00	6.50	5.50	FKM/FABRIC	SRV-1862
E160458506	53.00	45.00	7.00	6.00	FKM/FABRIC	SRV-1817
E16045L501	53.00	45.00	7.00	6.00	PU	PPA-625
E160458503	53.00	45.00	7.00	6.00	FKM/FABRIC	SRV-1153
E160458305	53.00	45.00	7.00	6.00	NBR/FABRIC	SRV-806
E160458320	53.00	45.00	7.50	6.50	NBR/FABRIC	SRV-2235
E160458316	53.00	45.00	9.00	8.00	NBR/FABRIC	SRV-2064
E160388310	53.84	38.10	11.48	10.48	NBR/FABRIC	SRV-1781
E160388305	53.97	38.10	13.00	12.00	NBR/FABRIC	SRV-2069
E160448303	53.97	44.45	5.30	4.30	NBR/FABRIC	SRV-897
E160468301	54.00	46.00	8.30	7.30	NBR/FABRIC	SRV-1550
E160408324	55.00	40.00	8.00	7.00	NBR/FABRIC	SRV-2140
E160408317	55.00	40.00	8.30	7.30	NBR/FABRIC	SRV-1812
E160408503	55.00	40.00	10.00	9.00	FKM/FABRIC	SRV-950
E160408325	55.00	40.00	11.20	10.20	NBR/FABRIC	SRV-2141
E160458501	55.00	45.00	8.00	7.00	FKM/FABRIC	SRV-893
E160458317	55.00	45.00	8.00	7.00	NBR/FABRIC	SRV-2156
E160458303	55.00	45.00	8.30	7.30	NBR/FABRIC	SRV-507
E160458502	55.00	45.00	8.30	7.30	FKM/FABRIC	SRV-942
E160458318	55.00	45.00	8.50	7.50	NBR/FABRIC	SRV-2159
E160458309	55.00	45.00	8.90	7.90	NBR/FABRIC	SRV-1435
E160458504	55.00	45.00	9.00	8.00	FKM/FABRIC	SRV-1308
E160458509	55.00	45.00	10.80	9.80	FKM/FABRIC	SRV-1909
E160458304	55.00	45.00	12.00	11.00	NBR/FABRIC	SRV-1762
E160488301	55.00	48.00	9.00	8.00	NBR/FABRIC	SRV-1759
E160458505	56.00	45.00	7.00	6.00	FKM/FABRIC	SRV-1540
E160468302	56.00	46.00	8.30	7.30	NBR/FABRIC	SRV-2063
E160458508	57.00	45.00	9.20	8.20	FKM/FABRIC	SRV-1867
E160448304	57.15	44.45	9.52	8.52	NBR/FABRIC	SRV-1094
E160448309	57.15	44.45	10.40	9.40	NBR/FABRIC	SRV-1945
E160448302	57.15	44.48	7.94	6.94	NBR/FABRIC	SRV-1509
E16047L501	57.20	47.60	9.50	8.50	PU	PPA-554
E160408326	60.00	40.00	10.30	9.30	NBR/FABRIC	SRV-2142
E160408505	60.00	40.00	14.40	13.40	FKM/FABRIC	SRV-1032
E160408319	60.00	40.00	15.00	14.00	NBR/FABRIC	SRV-1943
E160408307	60.00	40.00	15.50	14.50	NBR/FABRIC	SRV-803
E160458308	60.00	45.00	11.00	10.00	NBR/FABRIC	SRV-1100
E16045L502	60.00	45.00	12.00	11.00	PU	PPA-3206
E160488302	60.00	48.00	7.30	6.30	NBR/FABRIC	SRV-2062
E160508502	60.00	50.00	8.00	7.00	FKM/FABRIC	SRV-855
E160508301	60.00	50.00	8.30	7.30	NBR/FABRIC	SRV-508

Part No.	D (H11)	d (f8)	L (+0.2)	H	Material	Mould No.
E160508503	60.00	50.00	8.30	7.30	FKM	SRV-1161
E160508304	60.00	50.00	8.50	7.50	NBR/FABRIC	SRV-1562
E160508303	60.00	50.00	9.00	8.00	NBR/FABRIC	SRV-1418
E160508504	60.00	50.00	10.00	9.00	FKM/FABRIC	SRV-1208
E160508305	60.00	50.00	10.30	9.30	NBR/FABRIC	SRV-600
E160508505	60.00	50.00	11.00	10.00	FKM/FABRIC	SRV-1277
E16052L501	60.00	52.00	6.50	5.50	PU	PPA-544
E160448308	60.20	44.45	11.92	10.92	NBR/FABRIC	SRV-1941
E160448305	60.32	44.45	11.30	10.30	NBR/FABRIC	SRV-1151
E160448301	60.32	44.45	12.11	11.11	NBR/FABRIC	SRV-1571
E160508324	60.35	50.80	11.10	10.10	NBR/FABRIC	SRV-1537
E160558301	60.50	55.00	4.80	3.80	NBR/FABRIC	SRV-1004
E160448311	61.91	44.45	11.60	10.60	NBR/FABRIC	SRV-2065
E160508306	62.00	50.00	10.00	9.00	NBR/FABRIC	SRV-1375
E160508301	62.00	50.00	13.00	12.00	NBR/FABRIC	SRV-773
E160458306	63.00	45.00	11.00	10.00	NBR/FABRIC	SRV-805
E160558304	63.00	55.00	9.00	8.00	NBR/FABRIC	SRV-1417
E160478301	63.50	47.62	11.40	10.40	NBR/FABRIC	SRV-2168
E160558503	64.40	55.00	9.00	8.00	FKM/FABRIC	SRV-1309
E160508316	64.50	50.00	11.50	10.50	NBR/FABRIC	SRV-852
E160458312	65.00	45.00	14.50	13.50	NBR/FABRIC	SRV-1961
E160508327	65.00	50.00	10.60	9.60	NBR/FABRIC	SRV-1810
E160508326	65.00	50.00	11.00	10.00	NBR/FABRIC	SRV-1782
E160508329	65.00	50.00	11.50	10.50	NBR/FABRIC	SRV-1949
E160504601	65.00	50.00	12.00	11.00	VMQ	SRV-2130
E160508318	65.00	50.00	19.20	18.20	NBR/FABRIC	SRV-1043
E160558501	65.00	55.00	8.00	7.00	FKM/FABRIC	SRV-854
E160558311	65.00	55.00	8.00	7.00	NBR/FABRIC	SRV-2158
E160558302	65.00	55.00	8.30	7.30	NBR/FABRIC	SRV-809
E160551101	65.00	55.00	10.20	9.20	NBR/FABRIC	SRV-1732
E160548301	66.00	54.00	9.70	8.70	NBR/FABRIC	SRV-1393
E160568301	66.00	56.00	8.30	7.30	NBR/FABRIC	SRV-811
E160518301	66.50	51.00	9.00	8.00	NBR/FABRIC	SRV-1701
E160508307	66.54	50.80	11.30	10.30	NBR/FABRIC	SRV-1734
E160578306	66.54	57.15	7.00	6.00	NBR/FABRIC	SRV-1910
E160508302	66.67	50.80	9.52	8.52	NBR/FABRIC	SRV-1316
E160508317	66.67	50.80	11.50	10.50	NBR/FABRIC	SRV-1022
E160508309	66.67	50.80	11.50	10.50	NBR/FABRIC	SRV-1887
E160508310	66.67	50.80	12.50	11.50	NBR/FABRIC	SRV-279
E160578302	66.67	57.15	4.80	3.80	NBR/FABRIC	SRV-1395
E160498701	66.80	49.00	11.30	10.30	PU	PPA-1347
E160558309	67.00	55.00	10.60	9.60	NBR/FABRIC	SRV-2054
E160556601	67.00	55.00	14.70	13.70	FKM	SRV-1063
E160578307	67.00	57.00	8.30	7.30	NBR/FABRIC	SRV-2056
E160618301	69.00	61.00	8.90	7.90	NBR/FABRIC	SRV-814
E160608323	69.50	60.00	7.40	6.40	NBR/FABRIC	SRV-2068
E160508321	69.85	50.80	11.11	10.11	NBR/FABRIC	SRV-1185
E160508320	69.85	50.80	14.33	13.33	NBR/FABRIC	SRV-1144
E160578305	69.85	57.15	9.70	8.70	NBR/FABRIC	SRV-1842
E160578305	69.85	57.15	9.70	8.70	NBR/FABRIC	SRV-1842
E160578303	69.85	57.15	10.20	9.20	NBR/FABRIC	SRV-1804
E160576701	69.85	57.15	10.52	9.52	FKM/FABRIC	SRV-1431

Bold sizes are readily available in stock.
Other materials are available on request.

E16

Single Acting Symmetrical Seal

MAX SPARE LIMITED
QUALITY. PRECISION. SPEED.

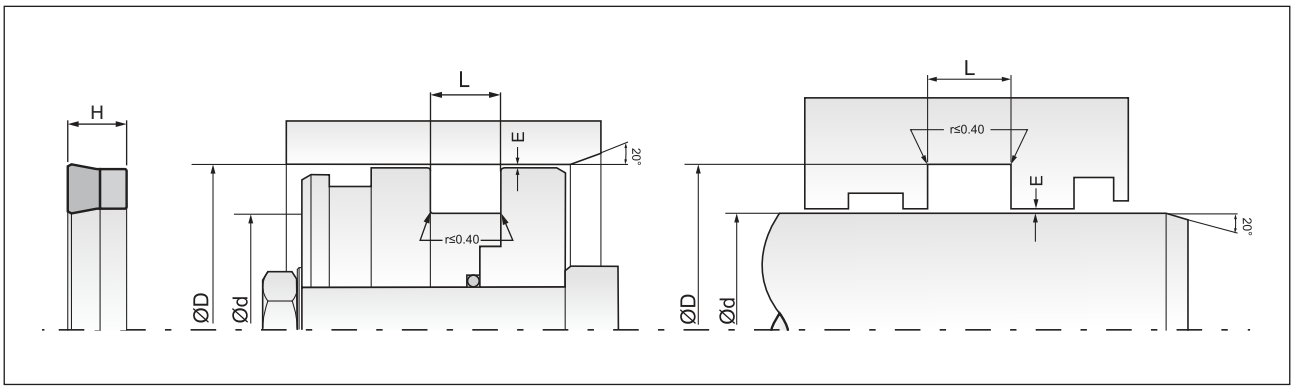

Part No.	D (H11)	d (f8)	L (+0.2)	H	Material	Mould No.
E160508325	70.00	50.00	11.00	10.00	NBR/FABRIC	SRV-1643
E160508330	70.00	50.00	14.30	13.30	NBR/FABRIC	SRV-2061
E160508315	70.00	50.00	15.50	14.50	NBR/FABRIC	SRV-807
E160558306	70.00	55.00	10.00	9.00	FKM/FABRIC	SRV-1224
E160558312	70.00	55.00	10.30	9.30	NBR/FABRIC	SRV-2143
E160558310	70.00	55.00	10.60	9.60	NBR/FABRIC	SRV-2055
E160558303	70.00	55.00	11.50	10.50	NBR/FABRIC	SRV-810
E160568304	70.00	56.00	10.50	9.50	NBR/FABRIC	SRV-1694
E160608326	70.00	60.00	6.50	5.50	NBR/FABRIC	SRV-2144
E160608317	70.00	60.00	7.00	6.00	NBR/FABRIC	SRV-1296
E160608501	70.00	60.00	8.00	7.00	FKM/FABRIC	SRV-1030
E160608320	70.00	60.00	8.00	7.00	NBR/FABRIC	SRV-1851
E160608324	70.00	60.00	8.30	7.30	NBR/FABRIC	SRV-2072
E160608505	70.00	60.00	8.50	7.50	FKM/FABRIC	SRV-1809
E160608301	70.00	60.00	8.50	7.50	NBR/FABRIC	SRV-484
E160608327	70.00	60.00	9.30	8.30	NBR/FABRIC	SRV-2145
E160608313	70.00	60.00	11.00	10.00	NBR/FABRIC	SRV-1135
E160608502	70.00	60.00	11.30	10.30	FKM/FABRIC	SRV-1082
E160608328	70.00	60.00	12.50	11.50	NBR/FABRIC	SRV-2146
E160608304	70.00	60.00	13.25	12.25	NBR/FABRIC	SRV-1402
E16060L501	70.00	60.00	13.40	12.40	PU	PUC-812
E160568303	72.00	56.00	11.00	10.00	NBR/FABRIC	SRV-1627
E160608503	72.00	60.00	9.60	8.60	FKM/FABRIC	SRV-1232
E160608508	72.00	60.00	10.00	9.00	FKM/FABRIC	SRV-1952
E160604601	72.00	60.00	10.00	9.00	VMQ	SRV-1940
E160608302	72.00	60.00	10.20	9.20	NBR/FABRIC	SRV-1870
E160608325	72.00	60.00	10.20	9.20	NBR/FABRIC	SRV-2073
E160608318	72.00	60.00	11.00	10.00	NBR/FABRIC	SRV-813
E160628301	72.00	62.00	6.70	5.70	NBR	SRV-1617
E160658311	73.00	65.00	9.80	8.80	NBR/FABRIC	SRV-2075
E160538302	73.02	53.97	14.80	13.80	NBR/FABRIC	SRV-2060
E160578308	73.02	57.15	11.60	10.60	NBR/FABRIC	SRV-2057
E160636601	74.50	63.50	11.00	10.00	FKM	SRV-1398
E160558308	75.00	55.00	13.50	12.50	NBR/FABRIC	SRV-1800
E160558313	75.00	55.00	14.00	13.00	NBR/FABRIC	SRV-2147
E160638310	75.00	63.00	8.00	7.00	NBR/FABRIC	SRV-2152
E160638302	75.00	63.00	9.80	8.80	NBR/FABRIC	SRV-931
E160638307	75.00	63.00	9.80	8.80	NBR/FABRIC	SRV-1938
E160638312	75.00	63.00	9.90	8.90	NBR/FABRIC	SRV-2190
E160638304	75.00	63.00	10.00	9.00	NBR/FABRIC	SRV-1763
E160658314	75.00	65.00	6.50	5.50	NBR/FABRIC	SRV-2151
E160658501	75.00	65.00	8.80	7.80	FKM/FABRIC	SRV-1138
E160658312	75.00	65.00	8.80	7.80	NBR/FABRIC	SRV-2076
E160568302	76.00	56.00	14.60	13.60	NBR/FABRIC	SRV-1525
E160658310	76.00	65.00	10.00	9.00	NBR/FABRIC	SRV-1774
E160688302	76.00	68.00	8.40	7.40	NBR/FABRIC	SRV-940
E160708308	76.00	70.00	6.40	5.40	NBR/FABRIC	SRV-925
E16048304	76.20	46.02	26.00	24.00	NBR/FABRIC	SRV-2123
E160468305	76.20	46.02	26.00	24.40	NBR/FABRIC	SRV-2128
E160578310	76.20	57.15	10.00	9.00	NBR/FABRIC	SRV-2058
E160578301	76.20	57.15	10.52	9.52	NBR/FABRIC	SRV-1187
E160578501	76.20	57.15	13.00	12.00	FKM/FABRIC	SRV-1853

Part No.	D (H11)	d (f8)	L (+0.2)	H	Material	Mould No.
E160578311	76.20	57.15	14.30	13.30	NBR/FABRIC	SRV-2201
E160608314	76.20	60.32	9.52	8.52	NBR/FABRIC	SRV-1174
E160638501	76.20	63.50	8.71	7.71	FKM/FABRIC	SRV-1319
E160668302	76.20	66.55	12.10	11.10	NBR/FABRIC	SRV-2122
E160658306	77.00	65.00	9.30	8.30	NBR/FABRIC	SRV-842
E160658313	77.00	65.00	9.80	8.80	NBR/FABRIC	SRV-2077
E160658308	78.00	65.00	13.00	12.00	NBR/FABRIC	SRV-1516
E160608322	79.37	60.32	14.80	13.80	NBR/FABRIC	SRV-1971
E160508328	80.00	50.00	25.10	23.50	NBR/FABRIC	SRV-2103
E160608504	80.00	60.00	8.00	7.00	FKM/FABRIC	SRV-1403
E160608321	80.00	60.00	13.00	12.00	NBR/FABRIC	SRV-1948
E160608319	80.00	60.00	14.00	13.00	NBR/FABRIC	SRV-1755
E160608309	80.00	60.00	14.50	13.50	NBR/FABRIC	SRV-1031
E160608309	80.00	60.00	15.50	14.50	NBR/FABRIC	SRV-812
E160601001	80.00	60.00	15.50	14.50	NBR/FABRIC	SRV-2175
E160658315	80.00	65.00	11.20	10.20	NBR/FABRIC	SRV-2150
E160658304	80.00	65.00	12.50	11.50	NBR/FABRIC	SRV-816
E160668301	80.00	66.00	11.10	10.10	NBR/FABRIC	SRV-1281
E160688303	80.00	68.00	10.00	9.00	NBR/FABRIC	SRV-1376
E160708331	80.00	70.00	8.00	7.00	NBR/FABRIC	SRV-2155
E160708305	80.00	70.00	8.30	7.30	NBR/FABRIC	SRV-818
E160708329	80.00	70.00	8.50	7.50	NBR/FABRIC	SRV-1942
E160708505	80.00	70.00	9.00	8.00	FKM/FABRIC	SRV-1602
E160708311	80.00	70.00	13.30	12.30	NBR/FABRIC	SRV-1278
E160708507	82.00	70.00	9.00	8.00	FKM/FABRIC	SRV-1891
E160708301	82.00	70.00	9.30	8.30	NBR/FABRIC	SRV-1835
E160708501	82.00	70.00	9.60	8.60	FKM/FABRIC	SRV-892
E160708306	82.00	70.00	9.80	8.80	NBR/FABRIC	SRV-817
E160708313	82.00	70.00	10.30	9.30	NBR/FABRIC	SRV-1583
E160638313	82.55	63.50	13.58	12.58	NBR/FABRIC	SRV-2236
E160638309	82.55	63.50	14.20	13.20	NBR/FABRIC	SRV-2074
E160638306	82.55	63.50	14.22	13.22	NBR	SRV-1829
E160638308	82.55	63.50	15.22	14.22	NBR/FABRIC	SRV-1946
E160638503	82.55	63.50	15.28	14.28	NBR/FABRIC	SRV-1819
E160638301	82.55	63.50	15.28	14.28	NBR/FABRIC	SRV-815
E160698302	82.55	69.85	9.80	8.80	NBR/FABRIC	SRV-2078
E160698301	82.55	69.85	9.90	8.90	NBR/FABRIC	SRV-1874
E160708315	84.00	70.00	13.00	12.00	NBR/FABRIC	SRV-1656
E160768305	84.00	76.00	8.90	7.90	NBR/FABRIC	SRV-1005
E160658316	85.00	65.00	14.00	13.00	NBR/FABRIC	SRV-2149
E160708330	85.00	70.00	8.30	7.30	NBR/FABRIC	SRV-2079
E160708309	85.00	70.00	9.50	8.50	NBR/FABRIC	SRV-1079
E160708328	85.00	70.00	9.90	8.90	NBR/FABRIC	SRV-1791
E160708327	85.00	70.00	10.00	9.00	NBR/FABRIC	SRV-1778
E160708327	85.00	70.00	10.00	9.00	NBR/FABRIC	SRV-1880
E160708302	85.00	70.00	12.00	11.00	NBR/FABRIC	SRV-844
E160706401	85.00	70.00	12.00	11.00	VMQ	SRV-1939
E16070L501	85.00	70.00	12.00	11.00	PU	PPA-3207
E160708312	85.00	70.00	12.50	11.50	NBR/FABRIC	SRV-1349
E160708302	85.00	70.00	13.00	12.00	NBR/FABRIC	SRV-820
E160708504	85.00	70.00	13.00	12.00	FKM/FABRIC	SRV-1247
E160758309	85.00	75.00	8.00	7.00	NBR/FABRIC	SRV-1806

Bold sizes are readily available in stock.
Other materials are available on request.

E16

Single Acting Symmetrical Seal

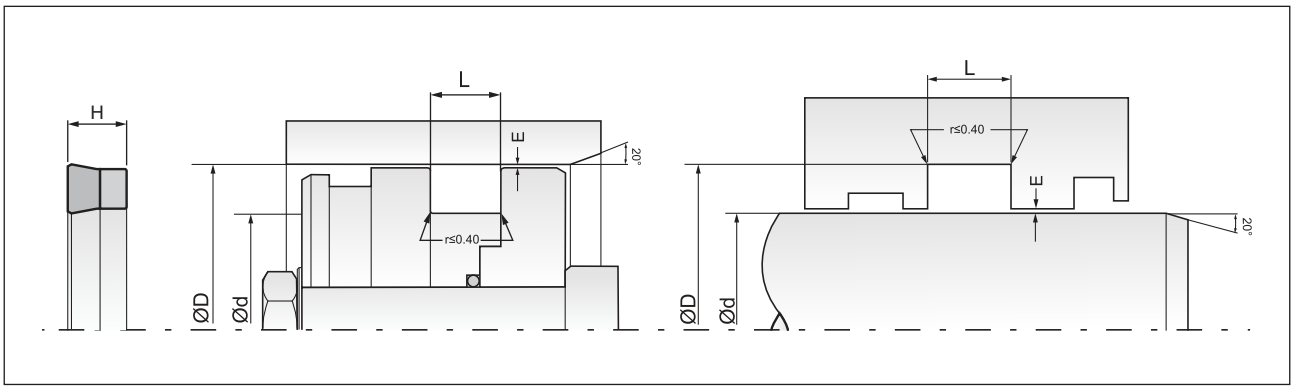

Part No.	D (H11)	d (f8)	L (+0.2)	H	Material	Mould No.
E160758304	85.00	75.00	8.30	7.30	NBR/FABRIC	SRV-821
E160758311	85.00	75.00	12.50	11.50	NBR/FABRIC	SRV-2081
E160758310	87.00	75.00	9.80	8.80	NBR/FABRIC	SRV-2080
E160778301	87.00	77.00	8.30	7.30	NBR/FABRIC	SRV-146
E160808301	88.00	80.00	12.50	11.50	NBR/FABRIC	SRV-1322
E160798301	88.50	79.00	7.40	6.40	NBR/FABRIC	SRV-1449
E160698303	88.90	69.85	14.50	13.50	NBR/FABRIC	SRV-2129
E160758306	89.50	75.00	11.50	10.50	NBR/FABRIC	SRV-850
E160708310	90.00	70.00	14.50	13.50	NBR/FABRIC	SRV-1195
E160708307	90.00	70.00	15.50	14.50	NBR/FABRIC	SRV-819
E160751101	90.00	75.00	11.50	10.50	NBR/FABRIC	SRV-1720
E160758305	90.00	75.00	12.50	11.50	NBR/FABRIC	SRV-830
E160788302	90.00	78.00	12.00	11.00	NBR/FABRIC	SRV-2157
E160788301	90.00	78.00	13.00	12.00	NBR/FABRIC	SRV-1947
E160808502	90.00	80.00	8.30	7.30	FKM/FABRIC	SRV-1155
E160808305	90.00	80.00	8.30	7.30	NBR/FABRIC	SRV-822
E160808317	90.00	80.00	8.50	7.50	NBR/FABRIC	SRV-1517
E160818302	91.00	81.00	8.00	7.00	NBR/FABRIC	SRV-2133
E160818301	91.00	81.00	8.30	7.30	NBR/FABRIC	SRV-2082
E160808302	92.00	80.00	9.00	8.00	NBR/FABRIC	SRV-1915
E160808503	92.00	80.00	9.60	8.60	FKM/FABRIC	SRV-1222
E160808306	92.00	80.00	9.80	8.80	NBR/FABRIC	SRV-825
E160808323	92.00	80.00	10.00	9.00	NBR/FABRIC	SRV-1944
E160848301	92.00	84.00	6.40	5.40	NBR/FABRIC	SRV-1265
E160768306	92.07	76.20	9.52	8.52	NBR/FABRIC	SRV-1293
E160768310	92.07	76.20	10.00	9.00	NBR/FABRIC	SRV-2178
E160658309	95.00	65.00	18.00	17.00	NBR/FABRIC	SRV-1589
E160758307	95.00	75.00	11.00	10.00	NBR/FABRIC	SRV-906
E160808318	95.00	80.00	11.00	10.00	NBR/FABRIC	SRV-1652
E160801101	95.00	80.00	12.00	11.00	NBR/FABRIC	SRV-1731
E160808313	95.00	80.00	12.10	11.10	NBR/FABRIC	SRV-1120
E160858304	95.00	85.00	8.00	7.00	NBR/FABRIC	SRV-1911
E160858305	95.00	85.00	8.30	7.30	NBR/FABRIC	SRV-826
E160768311	95.25	76.20	12.70	11.70	NBR/FABRIC	SRV-2219
E160768309	95.25	76.20	13.70	12.70	NBR/FABRIC	SRV-1954
E160768304	95.25	76.20	14.70	13.70	NBR/FABRIC	SRV-947
E160808315	96.00	80.00	10.60	9.60	NBR/FABRIC	SRV-1279
E160808330	96.00	80.00	10.70	9.70	NBR/FABRIC	SRV-2101
E160808319	96.00	80.00	11.50	10.50	NBR/FABRIC	SRV-824
E160888313	96.00	88.00	8.00	7.00	NBR/FABRIC	SRV-2134
E160858307	97.00	85.00	10.00	9.00	NBR/FABRIC	SRV-1013
E160918301	99.00	91.00	8.90	7.90	NBR/FABRIC	SRV-1454
E160808322	100.00	80.00	11.56	10.56	NBR/FABRIC	SRV-1788
E160808316	100.00	80.00	13.50	12.50	NBR/FABRIC	SRV-1294
E160808314	100.00	80.00	14.40	13.40	NBR/FABRIC	SRV-1196
E160808331	100.00	80.00	14.50	13.50	NBR/FABRIC	SRV-2210
E160808320	100.00	80.00	15.50	14.50	NBR/FABRIC	SRV-823
E160808311	100.00	80.00	27.00	25.00	NBR/FABRIC	SRV-1048
E160851101	100.00	85.00	12.00	11.00	NBR/FABRIC	SRV-1719
E160858302	100.00	85.00	13.00	12.00	NBR/FABRIC	SRV-1558
E160908306	100.00	90.00	10.20	9.20	NBR/FABRIC	SRV-1827
E160908309	100.00	90.00	10.30	9.30	NBR/FABRIC	SRV-2135

Part No.	D (H11)	d (f8)	L (+0.2)	H	Material	Mould No.
E160908311	100.00	90.00	11.00	10.00	NBR/FABRIC	SRV-2234
E160816601	101.00	81.00	13.00	12.00	FKM	SRV-1399
E160768301	101.60	76.20	9.80	8.80	NBR/FABRIC	SRV-841
E160828301	101.60	82.55	9.52	8.52	NBR/FABRIC	SRV-1197
E160828302	101.60	82.55	14.70	13.70	NBR/FABRIC	SRV-2083
E160888307	101.60	88.90	9.80	8.80	NBR/FABRIC	SRV-896
E160888310	101.60	88.90	10.20	9.20	NBR/FABRIC	SRV-2084
E160888305	101.60	88.90	11.11	10.11	NBR/FABRIC	SRV-1340
E160908501	102.00	90.00	9.60	8.60	FKM/FABRIC	SRV-1183
E160908308	102.00	90.00	10.00	9.00	NBR/FABRIC	SRV-1899
E160908502	102.00	90.00	10.50	9.50	FKM/FABRIC	SRV-1262
E160858308	104.77	85.72	12.70	11.70	NBR/FABRIC	SRV-1225
E160858309	105.00	85.00	14.40	13.40	NBR/FABRIC	SRV-2166
E160908305	105.00	90.00	9.20	8.20	NBR/FABRIC	SRV-1575
E160908310	105.00	90.00	9.30	8.30	NBR/FABRIC	SRV-2136
E160906401	105.00	90.00	12.00	11.00	VMQ	SRV-1895
E160908307	105.00	90.00	13.00	12.00	NBR/FABRIC	SRV-1866
E160908302	105.00	90.00	13.00	12.00	MT5/B(R/C)	SRV-1106
E160958307	105.00	95.00	11.00	10.00	NBR/FABRIC	SRV-2167
E160958306	107.00	95.00	12.00	11.00	NBR/FABRIC	SRV-2137
E160958304	107.00	95.00	12.70	11.70	NBR/FABRIC	SRV-1912
E160988301	107.50	98.00	7.20	6.20	NBR/FABRIC	SRV-2100
E160888314	107.95	88.90	12.30	11.30	NBR/FABRIC	SRV-2164
E160968302	108.00	96.00	12.50	11.50	NBR/FABRIC	SRV-1855
E160968301	108.00	96.00	13.50	12.50	NBR/FABRIC	SRV-1451
E160978302	108.00	97.00	12.80	11.80	NBR/FABRIC	SRV-851
E160706601	110.00	70.00	30.00	28.00	FKM	SRV-1272
E160858306	110.00	85.00	13.20	12.20	NBR/FABRIC	SRV-917
E160908304	110.00	90.00	12.40	11.40	NBR/FABRIC	SRV-1548
E160908301	110.00	90.00	13.50	12.50	NBR/FABRIC	SRV-827
E160951101	110.00	95.00	13.00	12.00	NBR/FABRIC	SRV-1718
E160958302	110.00	95.00	13.50	12.50	NBR/FABRIC	SRV-1559
E160708503	113.00	70.00	30.00	28.00	FKM/FABRIC	SRV-1176
E161008303	113.00	100.00	14.50	13.50	NBR/FABRIC	SRV-828
E160888311	114.30	88.90	14.10	13.10	NBR/FABRIC	SRV-2114
E160888312	114.30	88.90	19.00	18.00	NBR/FABRIC	SRV-2124
E160928301	114.30	92.07	12.70	11.70	NBR/FABRIC	SRV-1341
E160958305	114.30	95.25	13.40	12.40	NBR/FABRIC	SRV-2087
E160998301	115.00	99.00	13.00	12.00	NBR/FABRIC	SRV-1770
E161008307	115.00	100.00	11.80	10.80	NBR/FABRIC	SRV-1500
E161058305	115.00	105.00	11.00	10.00	NBR/FABRIC	SRV-1298
E161068302	116.00	106.00	8.40	7.40	NBR/FABRIC	SRV-941
E161068301	116.00	106.00	8.80	7.80	NBR/FABRIC	SRV-943
E161058306	117.00	105.00	12.80	11.80	NBR/FABRIC	SRV-2088
E161008305	120.00	100.00	10.20	9.20	NBR/FABRIC	SRV-1295
E161008502	120.00	100.00	12.00	11.00	FKM/FABRIC	SRV-1587
E161008501	120.00	100.00	13.00	12.00	FKM/FABRIC	SRV-1542
E161008308	120.00	100.00	14.40	13.40	NBR/FABRIC	SRV-1549
E161008304	120.00	100.00	14.40	13.40	NBR/FABRIC	SRV-829
E161058302	120.00	105.00	9.00	8.00	NBR/FABRIC	SRV-1865
E161058301	120.00	105.00	12.00	11.00	NBR/FABRIC	SRV-905
E161158302	123.00	115.00	12.50	11.50	NBR/FABRIC	SRV-1436

Bold sizes are readily available in stock.
Other materials are available on request.

E16

Single Acting Symmetrical Seal

MAX SPARE LIMITED
QUALITY. PRECISION. SPEED.

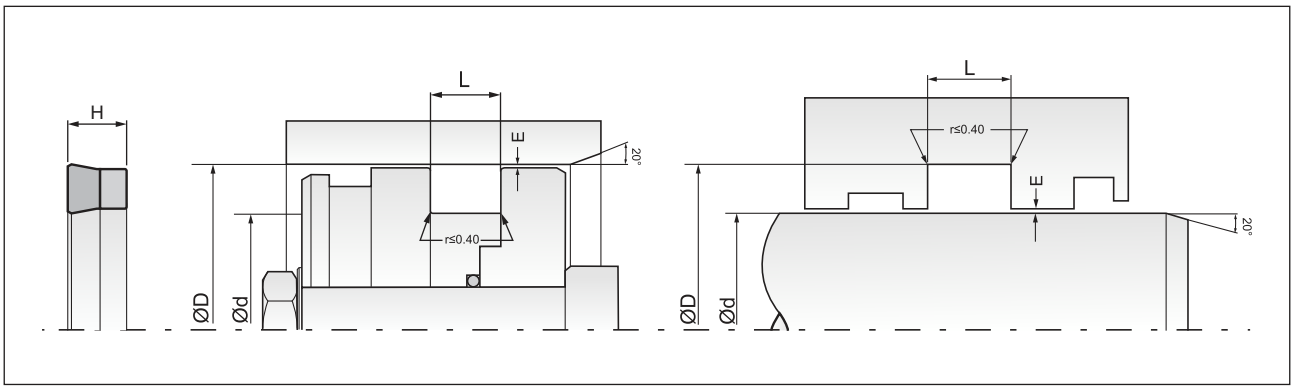

Part No.	D (H11)	d (f8)	L (+0.2)	H	Material	Mould No.
E161008503	125.00	100.00	17.00	16.00	FKM/FABRIC	SRV-1705
E161108305	125.00	110.00	11.00	10.00	NBR/FABRIC	SRV-1794
E161158308	125.00	115.00	8.00	7.00	NBR/FABRIC	SRV-2138
E161158307	125.00	115.00	8.40	7.40	NBR/FABRIC	SRV-904
E161158307.	125.00	115.00	8.40	7.40	NBR/FABRIC	SRV-2090
E161018306	127.00	101.60	19.00	18.00	NBR/FABRIC	SRV-902
E161208307	128.00	120.00	12.50	11.50	NBR/FABRIC	SRV-1041
E161108304	130.00	110.00	12.40	11.40	NBR/FABRIC	SRV-1430
E161158501	130.00	115.00	10.50	9.50	FKM/FABRIC	SRV-1964
E161188301	130.00	118.00	12.80	11.80	NBR/FABRIC	SRV-1446
E161208311	130.00	120.00	8.40	7.40	NBR/FABRIC	SRV-2091
E161208309	130.00	120.00	8.60	7.60	NBR/FABRIC	SRV-1648
E161238301	133.00	123.00	8.40	7.40	NBR/FABRIC	SRV-1014
E161148301	133.25	114.30	12.40	11.40	NBR/FABRIC	SRV-1423
E161148303	133.35	114.30	12.40	11.40	NBR/FABRIC	SRV-2089
E161208310	135.00	120.00	12.60	11.60	NBR/FABRIC	SRV-1129
E161258306	135.00	125.00	8.80	7.80	NBR/FABRIC	SRV-2093
E16106L501	135.40	106.00	15.30	14.30	PU	PPA-677
E161268301	136.00	126.00	8.50	7.50	NBR/FABRIC	SRV-912
E161278306	139.70	127.00	9.70	8.70	NBR/FABRIC	SRV-1743
E161278309	139.70	127.00	10.00	9.00	NBR/FABRIC	SRV-2163
E161208301	140.00	120.00	13.00	12.00	NBR/FABRIC	SRV-452
E161258304	140.00	125.00	12.00	11.00	NBR/FABRIC	SRV-889
E161308305	140.00	130.00	8.40	7.40	NBR/FABRIC	SRV-2096
E161278303	142.00	127.00	12.30	11.30	NBR/FABRIC	SRV-775
E161278307	145.00	127.00	11.20	10.20	NBR/FABRIC	SRV-2094
E161308302	145.00	130.00	9.00	8.00	NBR/FABRIC	SRV-1864
E161358301	145.00	135.00	13.00	12.00	NBR/FABRIC	SRV-1133
E161208312	146.05	120.65	19.20	18.20	NBR	SRV-2092
E161208308	150.00	120.00	25.00	23.00	NBR/FABRIC	SRV-1045
E161258305	150.00	125.00	16.00	15.00	NBR/FABRIC	SRV-1107
E161308306	150.00	130.00	14.70	13.70	NBR/FABRIC	SRV-2232
E161308304	150.00	130.00	15.80	14.80	NBR/FABRIC	SRV-1280
E161408303	150.00	140.00	12.50	11.50	NBR/FABRIC	SRV-1042

Part No.	D (H11)	d (f8)	L (+0.2)	H	Material	Mould No.
E161278308	152.40	127.00	19.20	18.20	NBR/FABRIC	SRV-2095
E161278305	152.40	127.00	23.22	22.22	NBR/FABRIC	SRV-1666
E161408304	155.00	140.00	13.50	12.50	NBR/FABRIC	SRV-1989
E161338301	158.75	133.35	13.60	12.60	NBR/FABRIC	SRV-2097
E161508302	165.00	150.00	12.50	11.50	NBR/FABRIC	SRV-1177
E161278304	165.10	127.00	32.75	31.75	NBR/FABRIC	SRV-776
E161468301	171.45	146.05	19.20	18.20	NBR/FABRIC	SRV-2085
E161608306	175.00	160.00	12.00	11.00	NBR/FABRIC	SRV-955
E161658305	176.00	165.00	10.00	9.00	NBR/FABRIC	SRV-956
E161528301	177.80	152.40	19.20	18.20	NBR/FABRIC	SRV-2086
E161658306	177.80	165.10	10.20	9.20	NBR/FABRIC	SRV-1503
E161608501	180.00	160.00	14.30	13.30	FKM/FABRIC	SRV-1422
E161608502	180.00	160.00	15.00	14.00	FKM/FABRIC	SRV-1858
E161608307	180.00	160.00	16.00	15.00	NBR/FABRIC	SRV-1690
E161708303	182.70	170.00	10.00	9.00	NBR/FABRIC	SRV-2179
E161708302	182.70	170.00	11.00	10.00	NBR/FABRIC	SRV-1748
E161708301	190.00	170.00	16.00	15.00	NBR/FABRIC	SRV-1284
E161808301	195.00	180.00	12.50	11.50	NBR/FABRIC	SRV-1852
E161658307	196.85	165.10	25.80	24.20	NBR/FABRIC	SRV-2071
E161878302	202.00	187.00	11.60	10.60	NBR/FABRIC	SRV-1875
E161718301	203.20	171.45	25.80	24.20	NBR/FABRIC	SRV-2099
E161878301	220.00	187.00	11.60	10.60	NBR/FABRIC	SRV-1735
E162008501	220.00	200.00	16.00	15.00	FKM/FABRIC	SRV-1965
E161908301	222.00	190.00	25.10	23.50	NBR/FABRIC	SRV-1747
E162038301	234.95	203.20	25.80	24.20	NBR/FABRIC	SRV-2098
E162228301	254.00	222.25	25.40	23.80	NBR/FABRIC	SRV-1320
E162228302	254.00	222.25	25.80	24.20	NBR/FABRIC	SRV-1421
E162441101	254.00	244.00	9.50	8.50	NBR	SRV-2230
E162408301	255.00	240.00	13.00	12.00	NBR/FABRIC	SRV-933
E162308501	260.00	230.00	19.90	18.90	FKM/FABRIC	SRV-1056
E162288301	260.35	228.60	25.40	23.80	NBR/FABRIC	SRV-888
E162548301	285.75	254.00	25.40	23.80	NBR/FABRIC	SRV-887
E164708301	515.00	470.00	37.00	35.00	NBR/FABRIC	SRV-1275
E16839D601	857.25	839.21	13.20	12.20	HNBR/FABRIC	SRV-1776

Bold sizes are readily available in stock.
Other materials are available on request.

E26

Single Acting Symmetrical Seal

DETAILS

E26 seal is a single acting robust design seal used for medium to heavy duty applications. This seal comprises of a rubberised fabric U seal base bonded to a rubber energiser and it needs split housing. The seal section is pre-loaded by the housing when installed to ensure effective sealing at low pressure. When the pressure increases, the nitrile energizes the fabric to increase the sealing area and hence improving the efficiency of the seal. The strength and durability of the rubberized fabric combines with its ability to retain lubricant keeping friction and wear to a minimum.

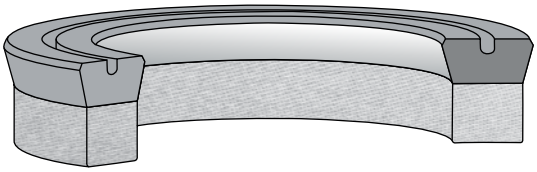

COMPATIBILITY

Mineral oils, bio oils, water soluble & water glycol fluids.

MATERIAL

Nitrile Rubber with fabric reinforcement 80/85 Shore A
FKM with fabric reinforcement 80/85 Shore A

APPLICATION

- Low to heavy duty hydraulic presses.
- Valves spindles.
- Mobile hydraulic presses.

OPERATING CONDITIONS

Temperature Range	:	-20°C to + 100°C (NBR)
	:	-20°C to + 220°C (FKM)
Pressure	:	250 Bar
Speed	:	0.5 m/s

FEATURES

- Excellent sealability during low & high pressure.
- Long service life.
- Good chemical resistance.
- Small cross section.
- Wide range of sizes available.

SURFACE ROUGHNESS

Static	:	0.8 µmRa
Dynamic	:	0.4 µmRa

INSTALLATION & ASSEMBLY

Careful installation is a prerequisite for the correct functioning of the seal. E26 seal requires split housing. In order to avoid damage during installation, load-in-chanfer of min. 5 x 20° must be provided on the rods and the seal groove must be free from pores, scratches etc.

PERMISSIBLE EXTRUSION GAP	E max (mm)
150 Bar	0.40
250 Bar	0.30

E26

Single Acting Symmetrical Seal

MAX SPARE LIMITED
QUALITY. PRECISION. SPEED.

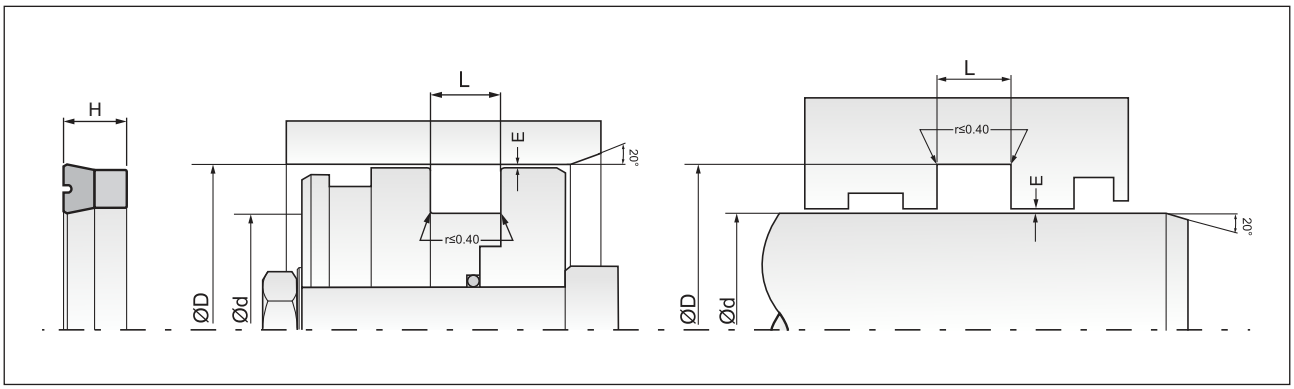

Part No.	D (H11)	d (f8)	L (+0.2)	H	Material	Mould No.
E260068303	12.00	6.00	8.30	7.30	NBR/FABRIC	SRV-1127
E260068304	12.50	6.60	9.50	8.50	NBR/FABRIC	SRV-1126
E260067901	13.00	6.00	6.00	5.50	HYTREL	PPA-1384
E260068302	14.00	6.00	5.00	4.50	NBR/FABRIC	SRV-991
E260088301	14.00	8.00	5.00	4.50	NBR/FABRIC	SRV-990
E260108302	18.00	10.00	5.00	4.50	NBR/FABRIC	SRV-989
E260108303	20.00	10.00	9.00	8.00	NBR/FABRIC	SRV-1073
E260128305	20.00	12.00	5.00	4.50	NBR/FABRIC	SRV-988
E260151101	20.62	15.87	3.67	3.17	NBR	SRV-2127
E260148301	22.00	14.00	5.00	4.50	NBR/FABRIC	SRV-977
E260168302	24.00	16.00	5.00	4.50	NBR/FABRIC	SRV-978
E260178301	25.00	17.00	5.00	4.50	NBR/FABRIC	SRV-979
E260188302	26.00	18.00	5.00	4.50	NBR/FABRIC	SRV-980
E260208301	28.00	20.00	5.00	4.50	NBR/FABRIC	SRV-981
E260207901	28.00	20.00	6.20	5.70	HYTREL	PPA-1383
E260188501	28.57	18.27	7.00	6.50	FKM/FABRIC	SRV-2203
E260208302	30.00	20.00	9.10	8.10	NBR/FABRIC	SRV-1849
E260228301	30.00	22.00	5.00	4.50	NBR/FABRIC	SRV-982
E260248302	32.00	24.00	4.80	4.30	NBR/FABRIC	SRV-1534
E260248301	32.00	24.00	5.00	4.50	NBR/FABRIC	SRV-983
E260248303	32.00	24.00	5.50	5.00	NBR/FABRIC	SRV-1885
E260258302	33.00	25.00	5.00	4.50	NBR/FABRIC	SRV-984
E260258301	33.00	25.00	5.50	5.00	NBR/FABRIC	SRV-1112
E260288302	36.90	28.60	4.10	3.60	NBR/FABRIC	SRV-1408
E260288301	38.00	28.00	6.20	5.70	NBR/FABRIC	SRV-975
E260248304	40.00	24.00	9.00	8.00	NBR/FABRIC	SRV-1902
E260308501	40.00	30.00	6.85	6.35	FKM/FABRIC	SRV-1368
E260328301	40.00	32.00	5.00	4.50	NBR/FABRIC	SRV-976
E260328302	42.00	32.00	6.20	5.70	NBR/FABRIC	SRV-987
E260348301	44.00	34.00	6.25	5.75	NBR/FABRIC	SRV-2188
E260318301	44.45	31.75	9.53	8.53	NBR/FABRIC	SRV-1473
E260308301	45.00	30.00	10.00	9.00	NBR/FABRIC	SRV-1416
E260308302	45.00	30.00	10.50	9.50	NBR/FABRIC	SRV-1745
E260358301	45.00	35.00	9.50	8.50	NBR/FABRIC	SRV-1211
E260368301	46.00	36.00	6.20	5.70	NBR/FABRIC	SRV-986
E260408301	50.00	40.00	6.20	5.70	NBR/FABRIC	SRV-974
E260408304	50.00	40.00	6.80	6.30	NBR/FABRIC	SRV-1498
E260408302	50.00	40.00	8.30	7.30	NBR/FABRIC	SRV-1154
E260388301	50.80	38.10	9.60	8.60	NBR/FABRIC	SRV-1288
E260448502	50.80	44.45	6.85	6.35	FKM/FABRIC	SRV-2229
E260458301	55.00	45.00	6.20	5.70	NBR/FABRIC	SRV-985
E260458302	55.00	45.00	6.80	6.30	NBR/FABRIC	SRV-1499
E260448301	57.15	44.45	9.53	8.53	NBR/FABRIC	SRV-1472
E260448501	57.50	44.45	12.50	11.50	FKM/FABRIC	SRV-1886
E260508303	60.00	50.00	6.20	5.70	NBR/FABRIC	SRV-963
E260508304	60.00	50.00	10.00	9.00	NBR/FABRIC	SRV-1848
E260508501	62.00	50.00	10.00	9.00	FKM/FABRIC	SRV-1220
E260538301	63.00	53.00	6.20	5.70	NBR/FABRIC	SRV-1009
E260558501	67.00	55.00	13.00	12.00	FKM/FABRIC	SRV-1136
E260488401	68.00	48.00	11.00	10.00	NBR/FABRIC	SRV-1987
E260578501	69.75	57.20	9.20	8.20	FKM/FABRIC	SRV-1751
E260508302	70.00	50.00	15.00	14.00	NBR/FABRIC	SRV-1257

Part No.	D (H11)	d (f8)	L (+0.2)	H	Material	Mould No.
E260508302	70.00	50.00	15.00	14.00	NBR/FABRIC	SRV-777
E260558306	70.00	55.00	10.00	9.00	NBR/FABRIC	SRV-1121
E260608501	70.00	60.00	8.50	7.50	FKM/FABRIC	SRV-1595
E260568301	71.00	56.00	9.55	8.55	NBR/FABRIC	SRV-1010
E260558302	75.00	55.00	11.50	10.50	NBR/FABRIC	SRV-1209
E260608302	75.00	60.00	9.55	8.55	NBR/FABRIC	SRV-1156
E260628301	75.00	62.00	7.00	6.50	NBR/FABRIC	SRV-946
E260638304	78.00	63.00	9.55	8.55	NBR/FABRIC	SRV-1011
E260638303	78.00	63.00	12.50	11.50	NBR/FABRIC	SRV-930
E260608303	80.00	60.00	12.25	11.25	NBR/FABRIC	SRV-1360
E260608304	80.00	60.00	15.40	14.40	NBR/FABRIC	SRV-1752
E260658303	80.00	65.00	9.55	8.55	NBR/FABRIC	SRV-1012
E260708501	85.00	70.00	9.55	8.55	FKM/FABRIC	SRV-1818
E260708302	85.00	70.00	10.50	9.50	NBR/FABRIC	SRV-965
E260763301	88.90	76.20	10.52	9.52	EPDM/FABRIC	SRV-1444
E260708303	90.00	70.00	11.00	10.00	NBR/FABRIC	SRV-996
E260758501	90.00	75.00	9.55	8.55	FKM/FABRIC	SRV-1191
E260808305	92.00	80.00	8.20	7.20	NBR/FABRIC	SRV-1554
E260808306	95.00	80.00	10.50	9.50	NBR/FABRIC	SRV-1598
E260768301	95.25	76.20	13.70	12.70	NBR/FABRIC	SRV-1529
E260778301	97.00	77.00	15.70	14.70	NBR/FABRIC	SRV-1903
E260808304	100.00	80.00	12.25	11.25	NBR/FABRIC	SRV-1361
E260858302	100.00	85.00	9.55	8.55	NBR/FABRIC	SRV-1015
E260858301	105.00	85.00	19.50	18.00	NBR/FABRIC	PRV-655
E260908305	105.00	90.00	9.55	8.55	NBR/FABRIC	SRV-1016
E260908309	105.00	90.00	10.00	9.00	NBR/FABRIC	SRV-1741
E260908301	105.00	90.00	10.50	9.50	NBR/FABRIC	SRV-922
E260908308	105.00	90.00	12.25	11.25	NBR/FABRIC	SRV-1544
E260848301	106.04	84.45	11.79	10.79	NBR/FABRIC	SRV-1672
E260848301	106.04	84.45	11.79	10.79	NBR/FABRIC	SRV-1673
E260858303	110.00	85.00	19.50	18.00	NBR/FABRIC	SRV-1714
E260878301	110.00	87.00	16.00	15.00	NBR/FABRIC	SRV-728
E26090E701	110.00	90.00	10.40	9.40	FKM/FABRIC	SRV-2206
E260908310	110.00	90.00	12.70	11.70	NBR/FABRIC	SRV-1847
E260908306	110.00	90.00	15.00	14.00	NBR/FABRIC	SRV-1036
E260958301	110.00	95.00	9.55	8.55	NBR/FABRIC	SRV-954
E261008303	115.00	100.00	9.55	8.55	NBR/FABRIC	SRV-1029
E261048301	117.40	104.80	13.87	12.87	NBR/FABRIC	SRV-1059
E261008302	120.00	100.00	12.25	11.25	NBR/FABRIC	SRV-1020
E261001001	120.00	100.00	13.00	12.00	NBR/FABRIC	SRV-1907
E261008502	120.00	100.00	15.00	14.00	FKM/FABRIC	SRV-1258
E261108305	123.00	110.00	8.20	7.20	NBR/FABRIC	SRV-1406
E261008304	125.00	100.00	12.50	11.50	NBR/FABRIC	SRV-1252
E261058301	125.00	105.00	12.25	11.25	NBR/FABRIC	SRV-1019
E261108306	125.00	110.00	11.80	10.80	NBR/FABRIC	SRV-1823
E261108303	125.00	110.00	12.00	11.00	NBR/FABRIC	SRV-1162
E261108302	130.00	110.00	12.25	11.25	NBR/FABRIC	SRV-997
E261108304	130.00	110.00	15.40	14.40	NBR/FABRIC	SRV-1392
E261158301	130.00	115.00	12.40	11.40	NBR/FABRIC	SRV-1407
E261148301	140.00	114.00	11.00	10.00	NBR/FABRIC	SRV-880
E261258303	140.00	125.00	11.80	10.80	NBR/FABRIC	SRV-1006
E261258302	140.00	125.00	12.50	11.50	NBR/FABRIC	SRV-878

Bold sizes are readily available in stock.
Other materials are available on request.

E26

Single Acting Symmetrical Seal

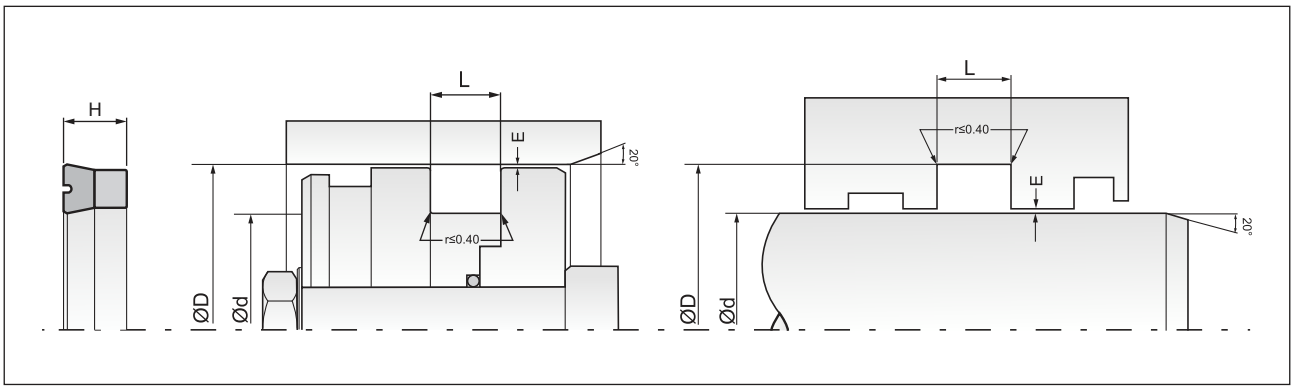

Part No.	D (H11)	d (f8)	L (+0.2)	H	Material	Mould No.
E261258309	145.00	125.00	10.50	9.50	NBR/FABRIC	SRV-1428
E261258304	145.00	125.00	12.25	11.25	NBR/FABRIC	SRV-1017
E261258308	145.00	125.00	13.50	12.50	NBR/FABRIC	SRV-1427
E261258306	145.00	125.00	15.40	14.40	NBR/FABRIC	SRV-1391
E261208303	150.00	120.00	12.25	11.25	NBR/FABRIC	SRV-1749
E261208302	150.00	120.00	20.00	18.50	NBR/FABRIC	SRV-1170
E261258307	150.00	125.00	15.40	14.40	NBR/FABRIC	SRV-1409
E261258305	150.00	125.00	19.70	18.20	NBR/FABRIC	SRV-1044
E261308302	150.00	130.00	12.25	11.25	NBR/FABRIC	SRV-1825
E261308301	150.00	130.00	12.50	11.50	NBR/FABRIC	SRV-1618
E261301102	150.00	130.00	12.50	11.50	NBR/FABRIC	SRV-1721
E261278301	152.40	127.00	12.43	11.43	NBR/FABRIC	SRV-1401
E261278302	152.40	127.00	18.30	16.80	NBR/FABRIC	SRV-1530
E261300901	155.00	130.00	20.50	19.00	NBR	SRV-2205
E261398301	155.60	139.70	8.11	7.11	NBR/FABRIC	SRV-1441
E261358301	160.00	135.00	14.50	13.50	NBR/FABRIC	SRV-1083
E261408301	160.00	140.00	12.25	11.25	NBR/FABRIC	SRV-1018
E261408304	160.00	140.00	16.00	15.00	NBR/FABRIC	SRV-1362
E261478501	160.00	147.00	9.50	8.50	FKM/FABRIC	SRV-1905
E261408303	170.00	140.00	19.50	18.00	NBR/FABRIC	SRV-1478
E261508304	170.00	150.00	12.25	11.25	NBR/FABRIC	SRV-1039
E261608302	173.00	160.00	8.20	7.20	NBR/FABRIC	SRV-1405
E261508305	175.00	150.00	15.30	14.30	NBR/FABRIC	SRV-1166
E261608303	180.00	160.00	16.00	15.00	NBR/FABRIC	SRV-1664
E261658301	180.00	165.00	10.00	9.00	NBR/FABRIC	SRV-1163
E261608301	185.00	160.00	15.40	14.40	NBR/FABRIC	SRV-1028
E261601001	185.00	160.00	16.00	15.00	NBR/FABRIC	SRV-1906
E261698301	200.00	169.00	23.50	22.00	NBR/FABRIC	SRV-2224
E261701001	200.00	170.00	18.00	16.50	NBR/FABRIC	SRV-1736
E261708301	200.00	170.00	20.00	18.50	NBR/FABRIC	SRV-1008
E261758301	200.00	175.00	15.40	14.40	NBR/FABRIC	SRV-1027
E261808301	205.00	180.00	15.40	14.40	NBR/FABRIC	SRV-1033
E261808303	205.00	180.00	17.50	16.00	NBR/FABRIC	SRV-1610
E261708302	210.00	170.00	30.30	28.80	NBR/FABRIC	SRV-2189
E261808305	210.00	180.00	14.00	13.00	NBR/FABRIC	SRV-2211
E261808302	210.00	180.00	23.00	21.50	NBR/FABRIC	SRV-1574
E261808304	210.00	180.00	28.00	26.50	NBR/FABRIC	SRV-2169
E261908302	210.00	190.00	12.25	11.25	NBR/FABRIC	SRV-1742
E261858303	215.00	185.00	19.90	18.40	NBR/FABRIC	SRV-1167
E261908301	215.00	190.00	16.00	15.00	NBR/FABRIC	SRV-1164
E261958301	215.00	195.00	14.50	13.50	NBR/FABRIC	SRV-1846
E261908303	220.00	190.00	23.30	21.80	NBR/FABRIC	SRV-1746
E262028301	220.00	202.00	10.00	9.00	NBR/FABRIC	SRV-1693
E261888301	225.00	188.00	27.50	26.00	NBR	SRV-1671
E262008303	225.00	200.00	15.40	14.40	NBR/FABRIC	SRV-1426
E262008304	225.00	200.00	16.00	15.00	NBR/FABRIC	SRV-2004
E262058301	225.00	205.00	11.00	10.00	NBR/FABRIC	SRV-1158
E26212D601	225.00	212.00	9.50	8.50	HNBR/FABRIC	SRV-2228
E26209E701	228.50	209.50	8.90	7.90	FKM/FABRIC	SRV-2207

Part No.	D (H11)	d (f8)	L (+0.2)	H	Material	Mould No.
E262008302	230.00	200.00	16.80	15.30	NBR/FABRIC	SRV-1411
E262008301	230.00	200.00	19.50	18.00	NBR/FABRIC	SRV-1382
E262108301	235.00	210.00	15.40	14.40	NBR/FABRIC	SRV-1397
E262208302	250.00	220.00	18.50	17.00	NBR/FABRIC	SRV-1244
E262208303	250.00	220.00	19.50	18.00	NBR/FABRIC	SRV-1538
E262208304	250.00	220.00	24.00	22.50	NBR/FABRIC	SUK-240
E262121101	250.82	212.72	26.90	25.40	NBR/FABRIC	SRV-1687
E262258301	255.00	225.00	18.50	17.00	NBR/FABRIC	SRV-1688
E262258301	255.00	225.00	19.50	18.00	NBR/FABRIC	SRV-1802
E262208501	260.00	220.00	28.50	27.00	FKM/FABRIC	SRV-1315
E262208301	260.00	220.00	29.00	27.50	NBR/FABRIC	SRV-1007
E262358302	265.00	235.00	20.00	18.50	NBR/FABRIC	SRV-1904
E262408301	270.00	240.00	19.50	18.00	NBR/FABRIC	SRV-1750
E262488601	277.00	248.00	18.50	17.00	FKM/FABRIC	SRV-1831
E262480601	280.00	248.00	23.50	22.00	NBR/FABRIC	SUM-585
E262480601	280.00	248.00	23.50	22.00	NBR/FABRIC	SRV-1582
E262508301	280.00	250.00	19.50	18.00	NBR/FABRIC	SRV-1570
E262798301	292.10	279.40	15.28	14.28	NBR/FABRIC	SRV-1580
E262658302	300.00	265.00	17.50	16.00	NBR/FABRIC	SRV-840
E262808302	306.00	280.00	16.00	15.00	NBR/FABRIC	SRV-2172
E262908302	311.00	290.00	14.00	13.00	NBR/FABRIC	SRV-1037
E262808301	320.00	280.00	21.50	20.00	NBR/FABRIC	SRV-839
E262901001	320.00	290.00	18.50	17.00	NBR/FABRIC	SRV-2000
E262908303	330.00	290.00	17.50	16.00	NBR/FABRIC	SRV-1566
E263231101	361.95	323.85	26.90	25.40	NBR/FABRIC	SRV-1686
E263508401	380.00	350.00	26.50	25.00	NBR/FABRIC	SRV-2226
E263451001	385.00	345.00	24.00	22.50	NBR/FABRIC	SRV-1832
E263608301	385.00	360.00	22.00	20.50	NBR/FABRIC	SRV-1958
E26355R301	387.35	355.60	12.09	11.09	PU	STB-148
E263508301	390.00	350.00	20.50	19.00	NBR/FABRIC	SRV-1995
E263551001	393.70	355.60	26.90	25.40	NBR/FABRIC	SUM-584
E263681101	400.05	368.30	19.02	17.52	NBR	SRV-1715
E264318301	469.90	431.80	28.50	27.00	NBR/FABRIC	SRV-2173
E264321101	470.78	432.18	36.80	35.30	NBR/FABRIC	SRV-1651
E264408301	480.00	440.00	30.30	28.80	NBR/FABRIC	SRV-1740
E265108302	530.00	510.00	14.00	13.00	NBR/FABRIC	SRV-1882
E265108301	550.00	510.00	26.50	25.00	NBR/FABRIC	SUVG-361
E265308401	560.00	530.00	26.50	25.00	NBR/FABRIC	SRV-2216
E265558301	575.00	555.00	12.50	11.50	NBR/FABRIC	SRV-1313
E265608401	600.00	560.00	26.50	25.00	NBR/FABRIC	SRV-2227
E26580S401	605.00	580.00	17.70	16.20	HNBR	SRV-1834
E266008301	650.00	600.00	32.50	31.00	NBR/FABRIC	SRV-1263
E266151101	654.05	615.95	26.90	25.40	NBR	SRV-1716
E266658301	717.00	665.00	30.30	28.80	NBR/FABRIC	SRV-1739
E267908301	810.00	790.00	14.00	13.00	NBR/FABRIC	SRV-1881
E269008301	950.00	900.00	34.00	32.50	NBR/FABRIC	SRV-2223
E269008302	953.50	900.00	34.00	32.50	NBR/FABRIC	SRV-2222
E269508301	1000.00	950.00	33.50	32.00	NBR/FABRIC	SUVG-516

Bold sizes are readily available in stock.
Other materials are available on request.

E17

Single Acting Symmetrical Seal

DETAILS

E17 seal is a single acting robust design seal used for medium to heavy duty applications. This seal comprises of a rubberised fabric U seal base bonded to a rubber energiser. The seal section is pre-loaded by the housing when installed to ensure effective sealing at low pressure. When the pressure increases the rubber energises the U seal to increase the sealing area and hence the efficiency of the seal. The strength and durability of the rubberized fabric combines with its ability to retain lubricant keeping friction and wear to a minimum.

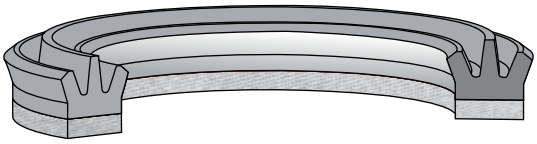

COMPATIBILITY

Mineral oils, bio oils, water soluble & water glycol fluids.

MATERIAL

Nitrile Rubber with fabric reinforcement 80/85 Shore A
FKM with fabric reinforcement 80/85 Shore A

APPLICATION

- Medium to heavy duty hydraulic presses.
- Standard cylinders, telescopic cylinders.
- Machine tools.
- Can also be used as a piston seal.

OPERATING CONDITIONS

Temperature Range	:	-20°C to + 100°C (NBR)
	:	-20°C to + 220°C (FKM)
Pressure	:	250 Bar
Speed	:	0.5 m/s

FEATURES

- Excellent sealability during low & high pressure.
- Well proven design.
- Long service life.
- Good wear resistance.
- Low fraction due to fabric reinforcement.

SURFACE ROUGHNESS

Static	:	1.6 µmRa
Dynamic	:	0.4 µmRa

INSTALLATION & ASSEMBLY

Careful fitting is a prerequisite for the correct functioning of the seal. This seal requires split glands and fitted with retainer ring. The seal must be properly lubricated before installation.

PERMISSIBLE EXTRUSION GAP	E max (mm)
150 Bar	0.30
250 Bar	0.20

E17

Single Acting Symmetrical Seal

MAX SPARE LIMITED
QUALITY. PRECISION. SPEED.

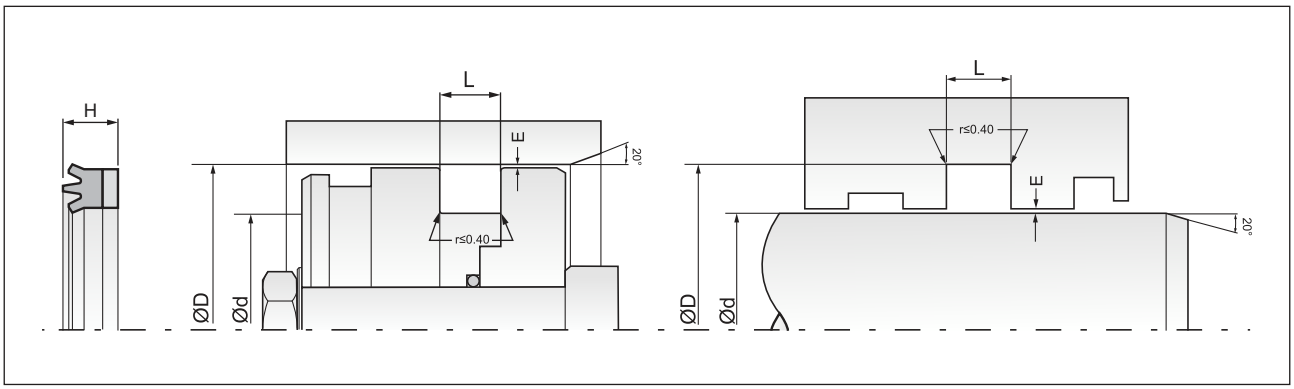

Part No.	D (H11)	d (f8)	H	L (+0.2)	Material	Mould No.
E170221001	28.00	22.00	4.31	3.81	NBR	UPS-465
E170278301	40.00	27.00	8.50	8.00	NBR/FABRIC	UPS-427
E170358303	50.00	35.00	9.50	9.00	NBR/FABRIC	UPS-447
E170358301	50.00	35.00	11.50	11.00	NBR/FABRIC	UPS-384
E170368301	50.00	36.00	9.00	8.50	NBR/FABRIC	UPS-355
E170378302	50.00	37.00	8.50	8.00	NBR/FABRIC	UPS-424
E170388303	50.80	38.10	10.00	9.50	NBR/FABRIC	UPS-407
E170458304	55.00	45.00	8.50	8.00	NBR/FABRIC	UPS-451
E17045L501	57.00	45.00	7.50	7.00	PU	PPA-1454
E17040L501	58.00	40.00	12.50	12.00	PU	PPA-2453
E170508308	60.00	50.00	5.50	5.00	NBR/FABRIC	UPS-420
E170448302	60.32	44.45	6.85	6.35	NBR/FABRIC	UPS-428
E170508305	62.00	50.00	8.00	7.50	NBR/FABRIC	UPS-391
E170508308	62.00	50.00	9.50	9.00	NBR/FABRIC	UPS-463
E17045L401	63.00	45.00	11.50	11.00	PU	PPA-1043
E170458303	63.00	45.00	11.50	11.00	NBR/FABRIC	UPS-359
E170458301	63.00	45.00	12.50	12.00	NBR/FABRIC	UPS-317
E170501101	63.00	50.00	7.50	7.00	NBR/FABRIC	UPS-234
E170508311	63.00	50.00	8.50	8.00	NBR/FABRIC	UPS-426
E170508307	63.00	50.00	8.80	8.30	NBR/FABRIC	UPS-410
E170506601	63.00	50.00	9.00	8.50	FKM	UPS-453
E170508301	63.00	50.00	9.50	9.00	NBR/FABRIC	UPS-254
E170508309	63.00	50.00	10.50	10.00	NBR/FABRIC	UPS-423
E170518301	63.00	51.00	8.50	8.00	NBR/FABRIC	UPS-298
E170448301	63.50	44.50	12.00	11.50	NBR/FABRIC	UPS-411
E170455901	63.50	45.00	11.50	11.00	PU	PPA-2811
E170458701	63.50	45.00	11.50	11.00	PU	PPA-2921
E170478305	63.50	47.62	8.43	7.93	NBR/FABRIC	UPS-429
E170508305	63.50	50.80	9.00	8.50	NBR/FABRIC	UPS-448
E170478304	64.00	47.00	8.50	8.00	NBR/FABRIC	SRV-1717
E17046L501	65.00	46.00	11.50	11.00	PU	PPA-2939
E170508306	66.70	50.80	10.02	9.52	NBR/FABRIC	SRV-1578
E170508310	67.00	50.00	10.30	9.80	NBR/FABRIC	UPS-425
E170508302	70.00	50.00	9.50	9.00	NBR/FABRIC	UPS-192
E170508303	70.00	50.00	13.00	12.50	NBR/FABRIC	UPS-372
E170508304	70.00	50.00	14.30	13.80	NBR/FABRIC	UPS-373
E17050L501	70.00	50.00	14.30	13.80	PU	PPA-1915
E170636601	73.00	63.00	6.80	6.30	FKM	UPS-464
E170558301	75.00	55.00	10.50	10.00	NBR/FABRIC	UPS-366
E170601104	75.00	60.00	10.50	10.00	NBR	UPS-414
E170658302	75.00	65.00	5.50	5.00	NBR/FABRIC	UPS-419
E17056L502	76.00	56.00	12.00	11.50	PU	PPA-2450
E170601105	76.00	60.00	10.50	10.00	NBR	SRV-1725
E170578501	76.20	57.15	11.80	11.30	FKM/FABRIC	UPS-336
E170618302	76.20	61.91	13.20	12.70	NBR/FABRIC	UPS-405
E17056L503	77.00	56.00	14.00	13.50	PU	PPA-2720
E170601101	80.00	60.00	10.50	10.00	NBR	UPS-354
E170601001	80.00	60.00	12.50	12.00	NBR/FABRIC	UPS-250
E170606601	80.00	60.00	12.50	12.00	FKM/FABRIC	UPS-356
E170608309	80.00	60.00	13.00	12.50	NBR/FABRIC	UPS-449
E170608306	80.00	60.00	15.50	15.00	NBR/FABRIC	UPS-383
E170608308	80.00	60.50	12.50	12.00	NBR/FABRIC	UPS-400

Part No.	D (H11)	d (f8)	H	L (+0.2)	Material	Mould No.
E170618301	80.00	61.00	12.50	12.00	NBR/FABRIC	UPS-299
E170618501	80.00	61.00	12.50	12.00	FKM/FABRIC	UPS-409
E170638302	80.00	63.00	12.50	12.00	NBR/FABRIC	UPS-404
E1706383003	80.00	63.00	13.00	12.50	NBR/FABRIC	UPS-382
E170638301	84.00	63.00	13.50	13.00	NBR/FABRIC	UPS-376
E170638701	84.00	63.00	14.00	13.50	PU	PPA-2417
E170648701	85.00	64.00	13.50	13.00	PU	PPA-1673
E17069L501	85.00	69.00	10.02	9.52	PU	PUD-745
E170658301	86.00	65.00	13.50	13.00	NBR/FABRIC	UPS-374
E170698305	87.50	69.50	10.30	9.80	NBR/FABRIC	SRV-1726
E170698302	88.90	69.80	14.00	13.50	NBR/FABRIC	SRV-1577
E170698301	88.90	69.85	10.02	9.52	NBR/FABRIC	UPS-341
E170698304	89.50	69.80	14.00	13.50	NBR/FABRIC	SRV-1596
E170708302	90.00	70.00	10.50	10.00	NBR/FABRIC	UPS-367
E170708303	90.00	70.00	12.50	12.00	NBR/FABRIC	UPS-437
E17070L501	90.00	70.00	13.50	13.00	PU	PPA-1914
E170788301	90.00	78.00	8.50	8.00	NBR/FABRIC	UPS-421
E170761001	95.25	76.20	10.02	9.52	NBR	UPS-348
E170808305	100.00	80.00	10.50	10.00	NBR/FABRIC	UPS-368
E170808304	100.00	80.00	12.50	12.00	NBR/FABRIC	UPS-249
E170808307	100.00	80.00	13.00	12.50	NBR/FABRIC	UPS-431
E170818503	100.00	81.00	11.50	11.00	FKM/FABRIC	UPS-456
E170818302	100.00	81.00	12.50	12.00	NBR/FABRIC	UPS-322
E170818303	100.00	81.00	13.00	12.50	NBR/FABRIC	UPS-378
E170828304	100.00	82.50	12.50	12.00	NBR/FABRIC	UPS-460
E170848301	100.00	84.00	10.00	9.50	NBR/FABRIC	UPS-392
E170828502	101.60	82.00	13.50	13.00	FKM/FABRIC	UPS-401
E170828501	101.60	82.55	11.80	11.30	NBR	UPS-302
E170828303	101.60	82.55	12.50	12.00	NBR/FABRIC	UPS-418
E170828302	101.60	82.55	14.00	13.50	NBR/FABRIC	UPS-375
E170811101	103.38	81.58	10.02	9.52	NBR	UPS-459
E170858301	105.00	85.00	12.50	12.00	NBR/FABRIC	UPS-432
E170958301	114.30	95.25	16.37	15.87	NBR/FABRIC	UPS-349
E170696701	117.47	69.85	30.50	30.00	FKM	UPS-385
E170958304	120.00	95.00	13.00	12.50	NBR/FABRIC	UPS-369
E170958302	120.00	95.00	15.50	15.00	NBR/FABRIC	UPS-350
E170954101	120.00	95.00	15.50	15.00	VMQ	UPS-445
E171048302	120.00	104.00	14.00	13.50	NBR/FABRIC	UPS-388
E170958303	125.00	95.00	15.50	15.00	NBR/FABRIC	UPS-363
E171008307	125.00	100.00	14.00	13.50	NBR/FABRIC	UPS-364
E171008502	125.00	100.00	15.50	15.00	FKM/FABRIC	UPS-358
E171008302	125.00	100.00	16.00	15.50	NBR/FABRIC	UPS-361
E171008309	125.00	100.00	16.00	15.50	NBR/FABRIC	UPS-406
E171008309	125.00	100.00	16.00	15.50	NBR/FABRIC	SRV-1767
E171008501	125.00	100.00	16.50	16.00	FKM/FABRIC	UPS-208
E171008310	125.00	100.00	18.50	18.00	NBR/FABRIC	UPS-387
E171086401	125.00	108.00	9.90	9.40	FKM	UPS-462
E171018302	127.00	101.60	16.50	16.00	NBR/FABRIC	UPS-417
E171108401	130.00	110.00	15.00	14.50	FKM/FABRIC	UPS-457
E17110L501	130.00	110.00	15.00	14.50	NBR	PPA-2690
E171159001	140.00	115.00	16.00	15.50	NBR/FABRIC	UPS-466
E171255901	145.00	125.00	16.50	16.00	PU	PPA-3296

Bold sizes are readily available in stock.
Other materials are available on request.

E17

Single Acting Symmetrical Seal

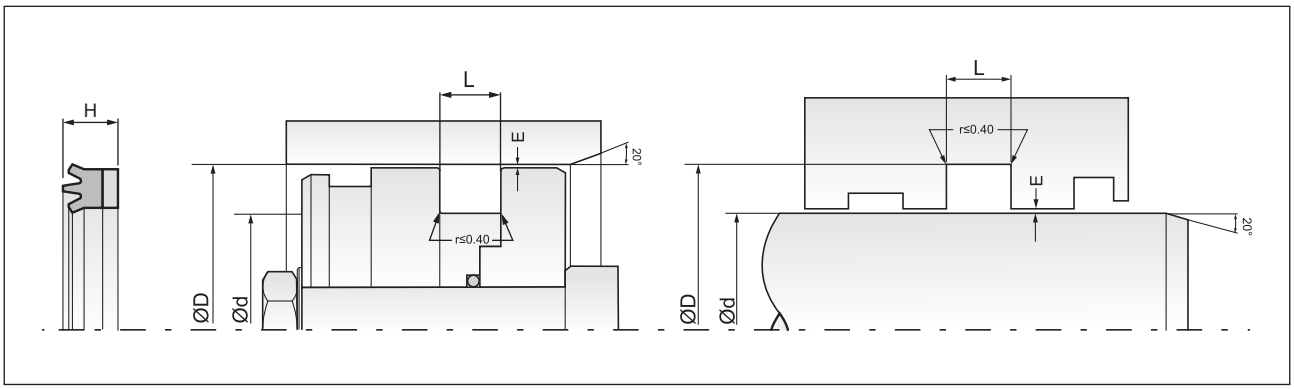

Part No.	D (H11)	d (f8)	H	L (+0.2)	Material	Mould No.
E171258501	150.00	125.00	14.50	14.00	FKM/FABRIC	UPS-430
E171258302	150.00	125.00	15.50	15.00	NBR/FABRIC	UPS-351
E171288301	152.00	128.00	17.50	17.00	NBR/FABRIC	UPS-433
E171016701	152.40	101.60	30.50	30.00	FKM	UPS-386
E171278501	152.40	127.00	16.37	15.87	FKM/FABRIC	UPS-248
E171278303	152.40	127.00	17.50	17.00	NBR/FABRIC	UPS-398
E171288501	155.00	128.00	17.50	17.00	FKM/FABRIC	SRV-1813
E17135L501	155.00	135.00	16.50	16.00	PU	PPA-757
E171355901	155.00	135.00	16.50	16.00	PU	PPA-3293
E171308301	160.00	130.00	17.50	17.00	NBR/FABRIC	UPS-370
E171348501	160.00	134.50	16.00	15.50	FKM/FABRIC	UPS-452
E171358302	160.00	135.00	15.50	15.00	NBR/FABRIC	UPS-352
E171358501	160.00	135.00	16.50	16.00	FKM/FABRIC	UPS-328
E171358303	160.00	135.00	16.50	16.00	NBR/FABRIC	SRV-1669
E171408301	160.00	140.00	12.50	12.00	NBR/FABRIC	UPS-379
E171368301	161.50	136.00	15.50	15.00	NBR/FABRIC	SRV-1649
E171448301	164.00	144.00	9.50	9.00	NBR/FABRIC	SRV-1914
E17145L501	165.00	145.00	16.50	16.00	PU	PPA-3224
E171528301	177.80	152.40	18.50	18.00	NBR/FABRIC	UPS-266
E171508301	180.00	150.00	18.00	17.50	NBR/FABRIC	UPS-365
E171605901	180.00	160.00	16.50	16.00	PU	PPA-3292
E171708301	200.00	170.00	15.50	15.00	NBR/FABRIC	SRV-1597
E171748301	200.00	174.50	17.50	17.00	NBR/FABRIC	UPS-413
E171741001	200.00	174.50	19.00	18.50	NBR	UPS-455
E171758304	200.00	175.00	15.50	15.00	NBR/FABRIC	UPS-399
E171758303	200.00	175.00	16.50	16.00	NBR/FABRIC	UPS-397
E171758503	200.00	175.00	18.00	17.50	NBR/FABRIC	UPS-340
E171758305	200.00	175.00	18.50	18.00	NBR/FABRIC	UPS-454
E171758502	200.00	175.00	19.50	19.00	FKM/FABRIC	UPS-389

Part No.	D (H11)	d (f8)	H	L (+0.2)	Material	Mould No.
E171758302	203.00	175.00	17.50	17.00	NBR/FABRIC	UPS-381
E171758504	203.00	175.00	19.50	19.00	FKM/FABRIC	UPS-422
E171771001	203.20	177.80	12.50	12.00	NBR	UPS-347
E171778301	203.20	177.80	16.37	15.87	NBR/FABRIC	UPS-310
E171771101	203.20	177.80	18.00	17.50	NBR/FABRIC	UPS-408
E171908303	212.00	190.00	14.50	14.00	NBR/FABRIC	UPS-393
E172008301	212.00	200.00	10.50	10.00	NBR/FABRIC	SUJ-318
E171900601	214.50	190.50	13.50	13.00	NBR/FABRIC	UPS-442
E172004101	230.00	200.00	15.50	15.00	VMQ	UPS-446
E172108301	235.00	210.00	20.50	20.00	NBR/FABRIC	SRV-1984
E17220L501	240.00	220.00	15.30	14.80	PU	PUK-164
E172181101	250.00	218.00	20.50	20.00	NBR/FABRIC	UPS-415
E172208501	250.00	220.00	19.50	19.00	FKM/FABRIC	UPS-443
E172208301	250.00	220.00	20.50	20.00	NBR/FABRIC	UPS-346
E172228301	254.00	222.00	20.50	20.00	NBR/FABRIC	UPS-450
E172280901	254.00	228.60	11.50	11.00	NBR	UPS-434
E172668301	304.80	266.70	23.50	23.00	NBR/FABRIC	UPS-412
E172790901	304.80	279.40	13.00	12.50	NBR	UPS-435
E174008301	430.00	400.00	33.50	33.00	NBR/FABRIC	SRV-1983
E173971001	450.00	397.00	31.50	31.00	NBR	SRV-1698
E174250601	457.50	425.50	16.50	16.00	NBR/FABRIC	UPS-440
E174281001	460.00	428.00	18.50	18.00	NBR/FABRIC	UPS-436
E174500601	482.50	450.50	17.00	16.50	NBR/FABRIC	UPS-441
E174471001	500.00	447.00	31.50	31.00	NBR	SRV-1699
E176788301	711.00	678.50	17.80	17.30	NBR/FABRIC	UPS-344
E177811001	812.80	781.06	18.00	17.50	NBR	UPS-439
E178808301	910.00	880.00	17.00	16.50	NBR/FABRIC	UPS-371
E179506001	990.00	950.00	20.40	19.90	PU	CPU-156
E1711391001	1169.00	1139.00	19.00	18.50	NBR	SLO-726

Bold sizes are readily available in stock.
Other materials are available on request.

E18

Single Acting Symmetrical Seal

DETAILS

E18 seal is a single acting seal used for medium duty applications. This seal comprises of a rubberised fabric U seal and rubber header ring. The rubber energizer ring provides extra pretension on the sealing lip of the u seal, so it ensures effective sealing at low pressure. When the pressure increases the rubber energises the 'U' seal to increase the sealing area and hence the efficiency of the seal.

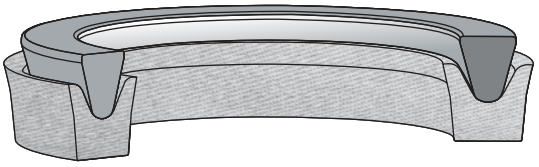

COMPATIBILITY

Mineral oils, bio oils, water soluble & water glycol fluids.

MATERIAL

Seal : Nitrile Rubber with fabric reinforcement 80/85 Shore A
Energizer : Nitrile rubber 80/85 Shore A

APPLICATION

- Medium to heavy duty hydraulic cylinders.
- Requires split gland.
- Can also be used as a piston seal.

OPERATING CONDITIONS

Temperature Range	:	-20°C to + 100°C
Pressure	:	250 Bar
Speed	:	0.5 m/s

FEATURES

- Excellent sealability during low & high pressure.
- Long service life.
- General purpose seal.

SURFACE ROUGHNESS

Static	:	1.6 µmRa
Dynamic	:	0.4 µmRa

INSTALLATION & ASSEMBLY

The sealing area must be free from pores, scratches etc. for the correct functioning of the seal. The seal must be properly lubricated before installation and also ensure that there is no damage to the sealing lips while installation.

E18

Single Acting Symmetrical Seal

MAX SPARE LIMITED
QUALITY. PRECISION. SPEED.

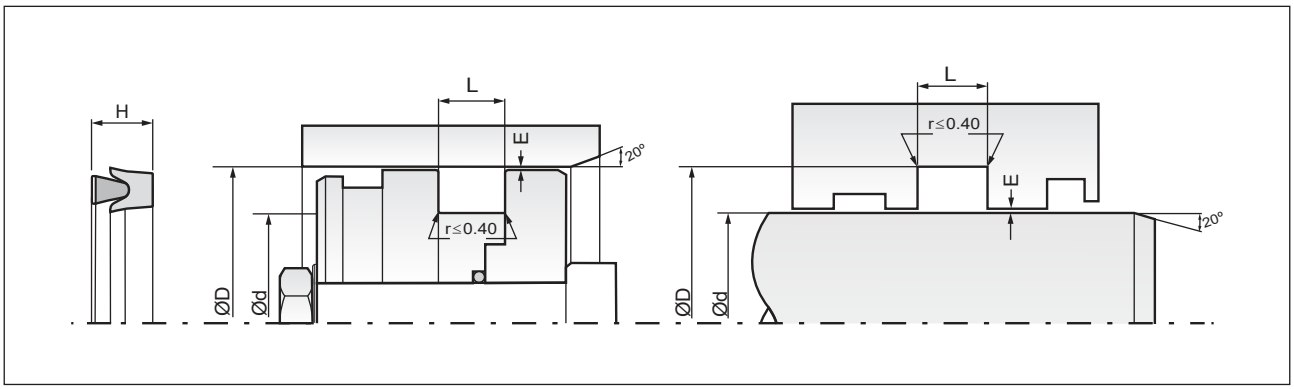

Part No.	D (H9/H8)	d (f8)	H	Material	Mould No.
E180126601	19.05	12.70	9.52	NBR/FABRIC	SAT-3416
E180146701	20.00	14.00	4.80	FKM	SAT-2259
E180108301	22.00	10.00	13.00	NBR/FABRIC	SAT-3059
E180140701	22.00	14.00	8.00	NBR/FABRIC	SAT-2920
E180128302	24.00	12.00	7.50	NBR/FABRIC	SAT-1975
E180128301	24.00	12.00	8.50	NBR/FABRIC	SAT-1815
E180146702	24.00	14.00	5.80	FKM	SAT-2468
E180151001	24.00	15.00	6.00	NBR	SAT-844
E18015AF01	25.00	15.00	6.22	FKM	SAT-2985
E180168302	25.00	16.00	5.5/7	NBR/FABRIC	SAT-1355
E180148301	26.00	14.00	7.50	NBR/FABRIC	SAT-2001
E180181202	26.00	18.00	5.50	NYLON	PPA-2199
E180188502	26.00	18.00	6.50	FKM/FABRIC	SAT-4126
E180188302	26.00	18.00	6.80	NBR/FABRIC	SAT-1740
E180128303	27.00	12.00	12.00	NBR/FABRIC	SAT-3380
E180168303	28.00	16.00	7.50	NBR/FABRIC	SAT-1976
E180168501	28.00	16.00	7.50	FKM/FABRIC	SAT-1904
E180188501	28.00	18.00	8.00	FKM/FABRIC	SAT-1741
E180188306	28.00	18.00	9.00	NBR/FABRIC	SAT-3548
E180201001	28.00	20.00	6.00	NBR	SUB-2659
E180208512	28.00	20.00	7.70	FKM/FABRIC	SAT-3659
E18020	28.00	20.00	7.70	ACETAL	PPA-2826
E180201002	28.00	20.00	8.00	ACETAL	PPA-2753
E180201002	28.00	20.00	8.00	NBR	SAT-3570
E180208504	28.00	20.00	8.00	FKM/FABRIC	SAT-3273
E180148301	30.00	14.00	8.00	NBR/FABRIC	SUB-1393
E180156601	30.00	15.00	10.00	NBR/FABRIC	SAT-3415
E180188503	30.00	18.00	7.00	FKM/FABRIC	SAT-4125
E180188304	30.00	18.00	7.50	NBR/FABRIC	SAT-1977
E180208511	30.00	20.00	7.00	FKM/FABRIC	SAT-3658
E180208511	30.00	20.00	7.00	ACETAL	PPA-2825
E180208305	30.00	20.00	7.50	NBR/FABRIC	SAT-2313
E180208308	30.00	20.00	9.00	NBR	SAT-3571
E180208308	30.00	20.00	9.00	ACETAL	PPA-2752
E180201101	30.00	20.00	9.00	NYLON	PPA-3034
E180201101	30.00	20.00	9.00	NBR/FABRIC	SAT-1827
E180226601	30.00	22.00	4.80	FKM	SAT-4178
E180208303	32.00	20.00	7.50	NBR/FABRIC	SAT-1331
E180223201	32.00	22.00	6.00	EPDM/FABRIC	SAT-2275
E180228307	32.00	22.00	9.50	NBR/FABRIC	SAT-3088
E180188305	33.00	18.00	10.00	NBR/FABRIC	SAT-2024
E180258304	33.00	25.00	6.80	NBR/FABRIC	SAT-2003
E180208503	34.00	20.00	14.00	FKM	SAT-3125
E180228303	34.00	22.00	6.00	NBR/FABRIC	SUB-1939
E180228304	34.00	22.00	7.50	NBR/FABRIC	SAT-2276
E180258307	34.92	25.40	10.00	NBR/FABRIC	SAT-3061
E180208505	35.00	20.00	10.00	FKM/FABRIC	SAT-3274
E180200801	35.00	20.00	11.00	NBR	SAT-2850
E180228301	35.00	22.00	10.00	NBR/FABRIC	SAT-1374
E180238301	35.00	23.00	7.50	NBR/FABRIC	SAT-1130
E180258305	35.00	25.00	7.00	NBR/FABRIC	SAT-2080
E180208302	36.00	20.00	8.00	NBR/FABRIC	SUB-1394

Part No.	D (H9/H8)	d (f8)	H	Material	Mould No.
E180286501	36.00	28.00	5.75/7	FKM/FABRIC	SAT-3418
E180198301	38.00	19.00	15.00	NBR/FABRIC	SAT-3729
E180208309	38.00	20.00	10.00	NBR/FABRIC	SAT-3671
E180281102	38.00	28.00	9.00	NBR/FABRIC	SAT-3449
E180281001	38.00	28.00	9.00	ACETAL	PPA-2783
E180258307	40.00	25.00	9.50	NBR/FABRIC	SAT-1387
E180258301	40.00	25.00	10.00	NBR/FABRIC	SAT-1042
E180258302	40.00	25.00	14.00	NBR/FABRIC	SAT-996
E180308304	40.00	30.00	5.00	NBR/FABRIC	SAT-1948
E180326601	40.00	32.00	8.00	FKM/FABRIC	SAT-1349
E180328302	42.00	32.00	8.00	NBR/FABRIC	SAT-2091
E180308306	45.00	30.00	8.90	NBR/FABRIC	SAT-2235
E180308302	45.00	30.00	9.00	NBR/FABRIC	SAT-1252
E180308303	45.00	30.00	10.00	NBR/FABRIC	SAT-1253
E180308307	45.00	30.00	20.00	NBR/FABRIC	SAT-2984
E180288302	47.63	28.57	12.70	NBR/FABRIC	SAT-2195
E180248401	48.00	24.00	12.00	NBR/FABRIC	SAT-4231
E180328401	48.00	32.00	20.00	NBR/FABRIC	SAT-3983
E180281101	48.41	28.57	12.69	NBR/FABRIC	SAT-2904
E180308305	50.00	30.00	12.00	NBR/FABRIC	SAT-2025
E180338501	50.00	33.00	14.00	FKM/FABRIC	SAT-1268
E180358302	50.00	35.00	9.00	NBR/FABRIC	SAT-1093
E180358501	50.00	35.00	9.50	FKM/FABRIC	SAT-1517
E180358305	50.00	35.00	10.00	NBR/FABRIC	SAT-1893
E180358307	50.00	35.00	11.50	NBR/FABRIC	SAT-3174
E180358303	50.00	35.00	12.50	NBR/FABRIC	SAT-1514
E180388301	50.00	38.00	8.60	NBR/FABRIC	SAT-2566
E180408306	50.00	40.00	7.50	NBR/FABRIC	SAT-1092
E180408312	50.00	40.00	13.00	NBR/FABRIC	SAT-2438
E180368302	51.00	36.00	9.50	NBR/FABRIC	SAT-1091
E180328301	52.00	32.00	18.00	NBR/FABRIC	SAT-1945
E180458303	53.00	45.00	8.00	NBR/FABRIC	SAT-1090
E180388302	53.97	38.10	19.05	NBR/FABRIC	SAT-3267
E180428301	54.00	42.00	7.50	NBR/FABRIC	SAT-3302
E180305901	55.00	30.00	18.00	PU	PPA-1353
E180358301	55.00	35.00	12.50	NBR/FABRIC	SAT-2582
E180408307	55.00	40.00	10.00	NBR/FABRIC	SAT-1099
E180408301	55.00	40.00	11.00	NBR/FABRIC	SAT-1043
E180408308	56.00	40.00	12.00	NBR/FABRIC	SAT-1098
E180408309	56.00	40.00	18.00	NBR/FABRIC	SAT-1263
E180408310	60.00	40.00	12.50	NBR/FABRIC	SAT-1886
E180406501	60.00	40.00	12.50	FKM	SAT-3821
E180400601	60.00	40.00	13.00	NBR	SAT-3854
E180458401	60.00	45.00	7.5/9.50	NBR/FABRIC	SAT-2236
E180448301	60.32	44.45	9.50	NBR/FABRIC	SAT-1089
E180438301	63.00	43.00	12.50	NBR/FABRIC	SAT-2583
E180458305	63.00	45.00	9.50	NBR/FABRIC	SAT-1292
E180458304	63.00	45.00	11.50	NBR/FABRIC	SAT-1254
E180488302	63.00	48.00	9.50	NBR/FABRIC	SAT-1332
E180488301	63.00	48.00	9.50	NBR/FABRIC	SAT-1095
E180458311	63.20	45.00	16.30	NBR/FABRIC	SAT-2801
E180448302	63.50	44.45	11.80	NBR/FABRIC	SAT-1193

Bold sizes are readily available in stock.
Other materials are available on request.

E18

Single Acting Symmetrical Seal

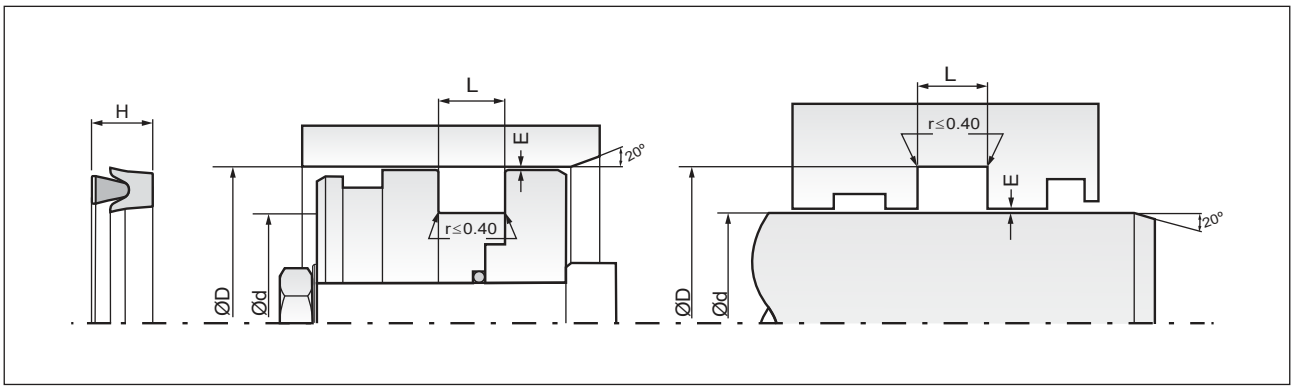

Part No.	D (H9/H8)	d (f8)	H	Material	Mould No.
E18050L201	63.50	50.80	20.98	ARAMID FABRIC	SAT-1018
E180458310	65.00	45.00	12.00	NBR/FABRIC	SAT-2683
E18045L501	65.00	45.00	12.50	PU	PPA-587
E180458301	65.00	45.00	12.50	NBR/FABRIC	SAT-1069
E180458308	65.00	45.00	12.50	NBR/FABRIC	SAT-2287
E180458312	65.00	45.00	13.30	NBR/FABRIC	SAT-2816
E180498301	65.00	49.00	12.00	NBR/FABRIC	SAT-1571
E180508310	65.00	50.00	7.50	NBR/FABRIC	SAT-2030
E180508305	65.00	50.00	12.50	NBR/FABRIC	SAT-1086
E180471101	67.46	47.62	12.69	NBR/FABRIC	SAT-3133
E180448303	70.00	44.00	15.50	NBR/FABRIC	SAT-3150
E180448303	70.00	44.00	15.50	NBR/FABRIC	SAT-2821
E180458313	70.00	45.00	15/18	NBR/FABRIC	SAT-3270
E180488303	70.00	48.00	17.00	NBR/FABRIC	SAT-3213
E180508311	70.00	50.00	12.20	NBR/FABRIC	SAT-3167
E180506601	70.00	50.00	12.50	NBR/FABRIC	SAT-1521
E180508308	70.00	50.00	12.50	NBR/FABRIC	SAT-1669
E180508306	70.00	50.00	14.50	NBR/FABRIC	SAT-1255
E180558303	70.00	55.00	9.00	NBR/FABRIC	SAT-2277
E180558302	75.00	55.00	12.00	NBR/FABRIC	SAT-1094
E180558501	75.00	55.00	12.00	FKM	SAT-3630
E180558304.	75.00	55.00	12.50	NBR/FABRIC	SAT-4136
E180558304	75.00	55.00	24.00	NBR/FABRIC	SAT-2983
E180608308	75.00	60.00	12.50	NBR/FABRIC	SAT-1096
E180578301	76.20	57.15	10.41	NBR/FABRIC	SAT-3102
E180598301	79.37	59.05	15.55	NBR/FABRIC	SAT-2902
E180608314	80.00	60.00	11.25	NBR/FABRIC	SAT-2238
E180608310	80.00	60.00	12.50	NBR/FABRIC	SAT-1670
E180606601	80.00	60.00	12.50	NBR/FABRIC	SAT-1100
E180608312	80.00	60.00	12.50	NBR/FABRIC	SAT-2067
E180608503	80.00	60.00	13.00	FKM/FABRIC	SAT-386
E180608309	80.00	60.00	16.50	NBR/FABRIC	SAT-1262
E180608315	80.00	60.00	12.00	NBR/FABRIC	SAT-2165
E180638401	80.00	63.00	24.00	NBR/FABRIC	SAT-3982
E180658302	80.00	65.00	11.30	NBR/FABRIC	SAT-1146
E180658304	80.00	65.00	14.00	NBR/FABRIC	SAT-2082
E180688301	80.00	68.00	12.00	NBR/FABRIC	SAT-3618
E180656001	85.00	65.00	12.00	NBR/FABRIC	SAT-1701
E180708305	85.00	70.00	12.50	NBR/FABRIC	SAT-1097
E180631101	86.90	63.50	12.53	NBR/FABRIC	SAT-3404
E180638302	88.90	63.50	12.37	NBR/FABRIC	SAT-409
E180708307	90.00	70.00	12.50	NBR/FABRIC	SAT-1671
E180708304	90.00	70.00	12.50	NBR/FABRIC	SAT-1087
E180708306	90.00	70.00	19.00	NBR/FABRIC	SAT-1316
E180708310	90.00	70.00	22.00	NBR/FABRIC	SAT-3576
E180708401	90.00	70.00	24.00	NBR/FABRIC	SAT-3981
E180750701	90.00	75.00	9.80	NBR/FABRIC	SAT-2535
E180806501	90.00	80.00	7.00	FKM/FABRIC	SAT-2556
E180758302	95.00	75.00	14.00	NBR/FABRIC	SAT-1369
E180701101	100.00	70.00	16.00	NBR	SAT-3532
E180808302	100.00	80.00	10.00	NBR/FABRIC	SAT-3573
E180808306	100.00	80.00	12.50	NBR/FABRIC	SAT-1672

Part No.	D (H9/H8)	d (f8)	H	Material	Mould No.
E180808304	100.00	80.00	12.50	NBR/FABRIC	SAT-1088
E180808308	100.00	80.00	13.50	NBR/FABRIC	SAT-3378
E180808308	100.00	80.00	24.00	NBR/FABRIC	SAT-3575
E180808501	100.00	80.00	25.20	FKM/FABRIC	SAT-1758
E180858306	100.00	85.00	12.00	NBR/FABRIC	SAT-1673
E180768301	101.60	76.00	13.90	NBR/FABRIC	SBT-933
E180808310	105.00	80.00	12.80	NBR/FABRIC	SBT-2644
E180858305	105.00	85.00	10.00	NBR/FABRIC	SUE-637
E180858301	105.00	85.00	12.50	NBR/FABRIC	SBT-882
E180858304	105.00	85.00	16.50	NBR/FABRIC	SBT-978
E180908307	110.00	90.00	12.50	NBR/FABRIC	SBT-1276
E180908306	110.00	90.00	12.50	NBR/FABRIC	SBT-884
E180908310	110.00	90.00	13.00	NBR/FABRIC	SBT-2304
E180888301	114.30	88.90	12.70	NBR/FABRIC	SBT-998
E180908308	115.00	90.00	15.50	NBR/FABRIC	SBT-1277
E180958302	115.00	95.00	12.50	NBR/FABRIC	SBT-1278
E180958301	115.00	95.00	12.50	NBR/FABRIC	SBT-887
E181008310	115.00	100.00	13.00	NBR/FABRIC	SBT-965
E181008311	115.00	100.00	13.50	NBR/FABRIC	SBT-979
E180958304	120.00	95.00	17.45	NBR/FABRIC	SBT-2149
E181008314	120.00	100.00	12.00	NBR/FABRIC	SBT-1215
E181008315	120.00	100.00	12.50	NBR/FABRIC	SBT-1279
E181008312	120.00	100.00	16.00	NBR/FABRIC	SBT-1048
E181008318	120.00	100.00	17.00	NBR/FABRIC	SBT-1306
E181008322	120.00	100.00	20.00	NBR/FABRIC	SBT-2054
E18105E301	120.00	105.00	10.00	NBR/FABRIC	SBT-1809
E181128301	120.00	112.00	10.00	NBR/FABRIC	SBT-1801
E180958303	125.00	95.00	19.00	NBR/FABRIC	SBT-1510
E181008316	125.00	100.00	15.50	NBR/FABRIC	SBT-1280
E181008308	125.00	100.00	15.50	NBR/FABRIC	SBT-892
E181008305	125.00	100.00	17.50	NBR/FABRIC	SBT-672
E181008313	125.00	100.00	20.00	NBR/FABRIC	SBT-1193
E181056601	125.00	105.00	12.50	FKM	SBT-1505
E181058303	125.00	105.00	12.50	NBR/FABRIC	SBT-3210
E181018301	127.00	101.60	16.00	NBR/FABRIC	SBT-947
E181008309	130.00	100.00	19.00	NBR/FABRIC	SBT-888
E181108303	130.00	110.00	12.50	NBR/FABRIC	SBT-870
E18110B301	130.00	110.00	13.00	NBR/FABRIC	SBT-3191
E181108305	130.00	110.00	13.50	NBR/FABRIC	SBT-886
E181208308	130.00	120.00	12.50	NBR/FABRIC	SBT-1319
E181048304	130.17	104.77	15.40	NBR/FABRIC	SBT-1413
E181108310	135.00	110.00	15.00	NBR/FABRIC	SBT-3171
E181108309	135.00	110.00	20.00	NBR/FABRIC	SBT-1970
E18117E301	137.00	117.00	24.00	NBR/FABRIC	SBT-1918
E181108307	140.00	110.00	16.50	NBR/FABRIC	SBT-1382
E181108306	140.00	110.00	18.00	NBR/FABRIC	SBT-885
E181108304	140.00	110.00	24/29	NBR/FABRIC	SBT-711
E181158304	140.00	115.00	15.00	NBR/FABRIC	SBT-2544
E181158305	140.00	115.00	15.50	NBR/FABRIC	SBT-3063
E181158302	140.00	115.00	15.50	NBR/FABRIC	SBT-890
E181208304	140.00	120.00	12.50	NBR/FABRIC	SBT-733
E183208601	140.00	120.00	14.00	FKM/FABRIC	SBT-3149

Bold sizes are readily available in stock.
Other materials are available on request.

E18

Single Acting Symmetrical Seal

MAX SPARE LIMITED
QUALITY. PRECISION. SPEED.

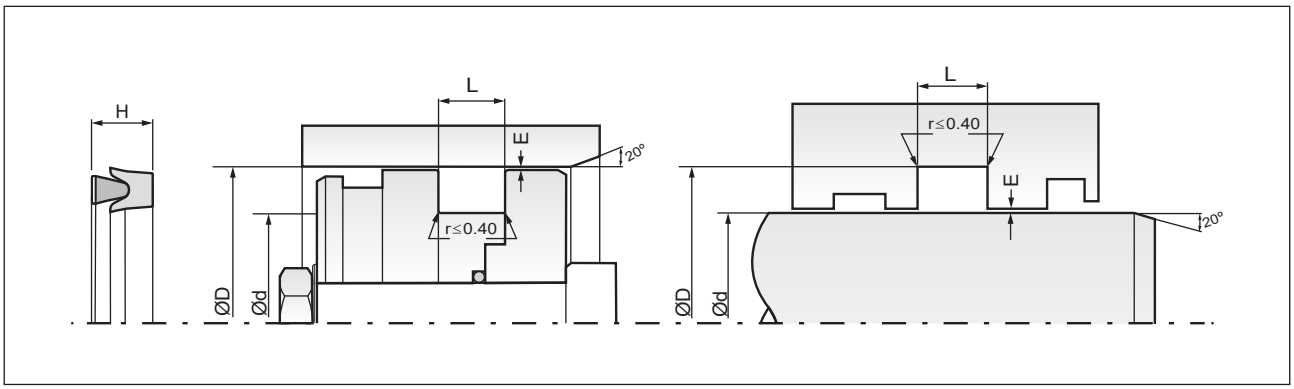

Part No.	D (H9/H8)	d (f8)	H	Material	Mould No.
E181208501	145.00	120.00	32.00	NBR/FABRIC	SBT-2252
E181278301	149.22	127.00	12.70	NBR/FABRIC	SBT-812
E181208307	150.00	120.00	18.80	NBR/FABRIC	SBT-1281
E181208310	150.00	120.00	19.00	NBR/FABRIC	SBT-881
E181208306	150.00	120.00	23.00	NBR/FABRIC	SBT-999
E181258303	150.00	125.00	13.00	NBR/FABRIC	SBT-927
E181258306	150.00	125.00	13.00	NBR/FABRIC	SBT-2543
E181258306	150.00	125.00	14.30	NBR/FABRIC	SBT-1838
E181258302	150.00	125.00	28.70	NBR/FABRIC	SBT-827
E181278302	152.40	127.00	17.00	NBR/FABRIC	SBT-948
E181308302	160.00	130.00	18.80	NBR/FABRIC	SBT-1282
E181408306	160.00	140.00	9.00	NBR/FABRIC	SBT-1561
E181458301	160.00	145.00	9.50	NBR/FABRIC	SBT-880
E181408303	165.00	140.00	32.00	NBR/FABRIC	SBT-377
E181408305	170.00	140.00	15.00	NBR/FABRIC	SBT-1506
E181408304	170.00	140.00	15.00	NBR/FABRIC	SBT-934
E181508304	175.00	150.00	20.00	NBR/FABRIC	SBT-997
E181508306	180.00	150.00	18.80	NBR/FABRIC	SBT-1283
E181508303	180.00	150.00	19.00	NBR/FABRIC	SBT-891
E181508307	180.00	150.00	20.00	NBR/FABRIC	SBT-2340
E181501001	180.00	150.00	26.00	NBR/FABRIC	SBT-1140
E181601101	185.00	160.00	15.50	NBR	SBT-1100
E181608303	190.00	160.00	19.00	NBR/FABRIC	SBT-1003
E181608304	190.00	160.00	20.00	NBR/FABRIC	SBT-1507
E181588301	190.50	158.75	38.10	NBR/FABRIC	SBT-2199
E181658301	196.85	165.10	16.25	NBR/FABRIC	SBT-2240
E181708302	200.00	170.00	15.00	NBR/FABRIC	SBT-1508
E181708301	200.00	170.00	18.80	NBR/FABRIC	SBT-1284
E181808304	200.00	180.00	12.50	NBR/FABRIC	SBT-1317
E181758302	205.00	175.00	25.00	NBR/FABRIC	SBT-1625
E181808303	210.00	180.00	19.00	NBR/FABRIC	SBT-1002
E181808305	210.00	180.00	19.00	NBR/FABRIC	SBT-2445
E181808301	220.00	180.00	20.00	NBR/FABRIC	SUJ-228
E181908301	220.00	190.00	20.00	NBR/FABRIC	SBT-879
E181968301	226.00	196.00	21.00	NBR/FABRIC	SBT-2637
E182058301	235.00	205.00	19.00	NBR/FABRIC	SBT-878
E182108301	240.00	210.00	18.00	NBR/FABRIC	SBT-1001
E182208303	240.00	220.00	19.00	NBR/FABRIC	SBT-858
E182188302	242.00	218.00	19.00	NBR/FABRIC	SBT-859
E182188301	250.00	218.00	38.00	NBR/FABRIC	SBT-831
E182208301	250.00	220.00	18.50	NBR/FABRIC	SUK-176

Part No.	D (H9/H8)	d (f8)	H	Material	Mould No.
E182208304	250.00	220.00	19.00	NBR/FABRIC	SBT-1000
E182201006	250.00	220.00	30.00	NBR/FABRIC	SBT-2950
E182308303	250.00	230.00	10.50	NBR/FABRIC	SBT-1780
E182308302	260.00	230.00	36.50	NBR/FABRIC	SBT-1033
E182348401	266.70	234.95	38.10	NBR/FABRIC	SBT-2977
E182408302	270.00	240.00	19.00	NBR/FABRIC	SBT-883
E182408301	270.00	240.00	38.00	NBR/FABRIC	SBT-830
E182478301	279.40	247.65	22.22	NBR/FABRIC	SBT-1173
E182508302	280.00	250.00	22.00	NBR/FABRIC	SUM-415
E182508303	280.00	250.00	25.00	NBR/FABRIC	SBT-889
E182708302	300.00	270.00	30.00	NBR/FABRIC	SUM-232
E182808304	310.00	280.00	30.00	NBR/FABRIC	SCT-951
E182808302	310.00	280.00	38.00	NYLON	PPA-1494
E182808301	310.00	280.00	38.00	NBR/FABRIC	SCT-313
E182668301	311.15	266.70	19.05	NBR/FABRIC	SCT-524
E182751001	315.00	275.00	36.00	NBR/FABRIC	SCT-1115
E182808303	320.00	280.00	25.00	NBR	SCT-1117
E182908302	320.00	290.00	18.50	NBR/FABRIC	SCT-485
E182901001	320.00	290.00	20.00	NBR/FABRIC	SCT-435
E182908301	320.00	290.00	20.00	NBR/FABRIC	SCT-815
E183118301	342.90	311.15	34.79	NBR/FABRIC	SCT-956
E183208302	350.00	320.00	18.50	NBR/FABRIC	SCT-661
E183208501	350.00	320.00	38.00	FKM/FABRIC	SCT-569
E183238301	355.60	323.85	38.10	NBR/FABRIC	SCT-957
E183208301	360.00	320.00	44.50	NBR/FABRIC	SCT-412
E183421101	374.65	342.90	38.10	NBR	SCT-1118
E183428301	374.65	342.90	38.10	NBR/FABRIC	SCT-804
E183601001	400.00	360.00	26.00	NBR/FABRIC	SCT-719
E183708302	400.00	370.00	19.00	NBR/FABRIC	SCT-1197
E183708301	415.00	370.00	35.00	NBR/FABRIC	SCT-981
E184008301	452.00	400.00	27.00	NBR/FABRIC	SCT-864
E184151001	455.00	415.00	25.00	NBR/FABRIC	SCT-983
E184808301	510.00	480.00	19.00	NBR/FABRIC	SCT-1198
E184808401	520.00	480.00	25.00	NBR/FABRIC	SCT-1211
E185308301	580.00	530.00	37.00	NBR/FABRIC	SCT-514
E185508301	590.00	550.00	30.00	NBR/FABRIC	SCT-486
E185908301	630.00	590.00	47.00	NBR/FABRIC	SCT-529
E186000901	640.00	600.00	36.50	NBR	SCT-617
E186300902	673.00	630.00	47.00	NBR/FABRIC	SCT-1061
E186508301	690.00	650.00	50.00	NBR/FABRIC	SCT-707
E187008301	740.00	700.00	32.50	NBR/FABRIC	SCT-528

Bold sizes are readily available in stock.
Other materials are available on request.

WIPER SEALS

MAX SPARE LIMITED
QUALITY. PRECISION. SPEED.

MAX TYPE	PRODUCT NAME	SEAL PROFILE	APPLICATION	PRESSURE (max) bar	TEMPERATURE	SPEED m/s	PAGE NO
W11	WIPER SEAL		MEDIUM DUTY	-	-30°C TO +100°C	1.0	345
W12	WIPER SEAL		MEDIUM DUTY	-	-30°C TO +100°C	1.0	351
W10	WIPER SEAL		MEDIUM DUTY	-	-30°C TO +100°C	1.0	359
W14	WIPER SEAL		HEAVY DUTY	-	-30°C TO +100°C	1.0	375
W15	WIPER SEAL		HEAVY DUTY	-	-30°C TO +100°C	1.0	383
W16	WIPER SEAL		HEAVY DUTY	-	-30°C TO +100°C	1.0	387
W29	WIPER SEAL		HEAVY DUTY	-	-30°C TO +100°C	1.0	391
W30	SCRAPER RING		HEAVY DUTY	-	-30°C TO +100°C	1.0	397
W13	WIPER SEAL		HEAVY DUTY	-	-30°C TO +100°C	1.0	401
W21	WIPER SEAL		HEAVY DUTY	-	-30°C TO +100°C	1.0	415
W18	WIPER SEAL		MEDIUM DUTY	-	-30°C TO +100°C	1.0	417
W17	WIPER SEAL		MEDIUM DUTY	-	-30°C TO +100°C	1.0	421
W38	SCRAPER RING		HEAVY DUTY	-	-30°C TO +100°C	10.0	425
W39	SCRAPER RING		HEAVY DUTY	-	-30°C TO +100°C	10.0	429

W11

Medium Duty Wiper Seal

DETAILS

W11 wiper has a lip designed to remove dirt, mud, dust, moisture, etc. accumulating on the rod to avoid wear and damage to the internal components including seals. This wiper is manufactured from a high hardness NBR compound suitable for installing in a grooved housing. To prevent dirt passing the outside of wiper and to reduce the pumping action, the outside diameter has an interference fit with the housing. Due to excellent wear resistance of polyurethane the life expected is 3 times than that of NBR. This wiper is also available in FKM (viton) for high temperature applications.

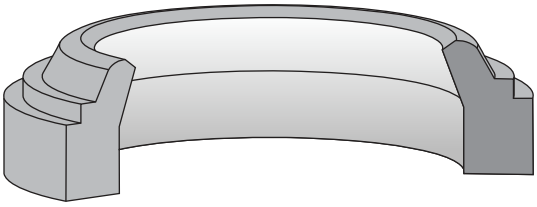

COMPATIBILITY

Mineral oils, bio oils, water soluble & water glycol fluids

MATERIAL

Nitrile Rubber 85/90 Shore A
Polyurethane 92 Shore A

APPLICATION

- Medium duty seal (For heavy duty application, select polyurethane as the material).
- Hydraulic and Pneumatic cylinders.
- Standard cylinders.

OPERATING CONDITIONS

Temperature Range	:	-30°C to + 100°C
Speed	:	PU - 1.0 m/s
		NBR - 0.5 m/s

FEATURES

- General purpose seal.
- Good wiping performance.
- Precision trimmed sealing lip.
- No twisting in the groove.
- Wide range of sizes.

SURFACE ROUGHNESS

Static	:	1.6 µmRa
Dynamic	:	0.4 µmRa

INSTALLATION & ASSEMBLY

Wiper seal can be easily fitted into the closed grooves by deforming it into kidney shape. The assembly tool must have no sharp edges. The seal must lubricate before installation.

W11

Medium Duty Wiper Seal

MAX SPARE LIMITED
QUALITY. PRECISION. SPEED.

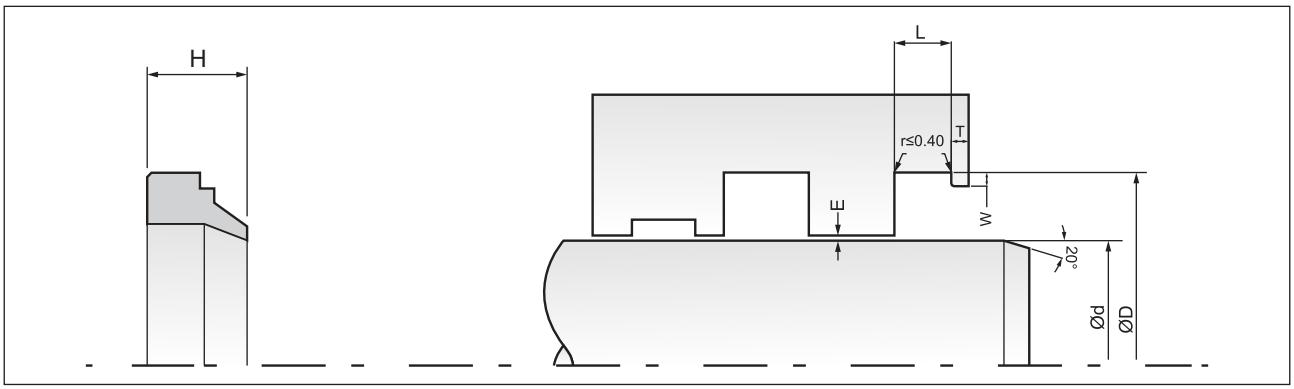

Part No.	d (f8)	D (H9)	L (+0.2)	H	T (+0.2)	W	Matl.	Mould No.
W110041101	4.00	8.00	2.00	3.00	1.00	1.00	NBR	WPS-2910
W110061102	6.00	10.00	2.20	4.00	1.00	1.00	NBR	WPS-3112
W110061101	6.00	12.00	2.00	3.00	1.00	1.00	NBR	WPS-2911
W110081102	8.00	14.00	2.60	5.00	1.00	1.00	NBR	WPS-4618
W110081103	8.00	16.00	4.00	5.00	1.00	1.00	NBR	WPS-4630
W110081101	8.00	16.00	4.00	5.00	1.00	1.00	NBR	WPS-2912
W11008L501	8.00	16.00	4.00	7.00	1.00	1.00	PU	WPH-949
W110101101	10.00	16.00	2.50	5.00	1.00	1.00	NBR	WPS-3583
W110101105	10.00	17.00	3.80	7.00	1.00	1.00	NBR	WPS-5804
W110106701	10.00	18.00	4.00	7.00	1.00	1.00	FKM	WPS-802
W110101103	10.00	18.00	4.00	7.30	1.00	1.00	NBR	WPS-5396
W110121105	12.00	16.00	2.60	5.00	1.00	1.00	NBR	WPS-6633
W11012L504	12.00	18.00	2.50	5.00	1.00	1.00	PU	WPH-1747
W110121104	12.00	18.00	2.60	5.00	1.00	1.00	NBR	WPS-6486
W11012L503	12.00	18.00	2.60	5.00	1.00	1.00	PU	WPH-1040
W110121101	12.00	18.00	2.60	5.00	1.00	1.00	NBR	WPS-2895
W110126702	12.00	18.00	2.60	5.00	1.00	1.00	FKM	WPS-2766
W110121101	12.00	18.00	2.60	5.00	1.00	1.00	NBR	WPS-742
W110126701	12.00	18.00	4.00	5.00	1.00	1.00	FKM	WPS-6405
W11012L502	12.00	20.00	3.82	7.40	1.00	1.00	PU	WPH-884
W11012V301	12.00	20.00	4.00	6.00	1.00	1.00	NBR	WPS-4253
W110121103	12.00	20.00	4.00	7.00	1.00	1.00	NBR	WPS-4001
W11012L501	12.00	20.00	4.00	7.00	1.00	1.00	PU	WPH-879
W110121102	12.00	20.00	4.00	8.00	1.00	1.00	FKM	WPS-287
W110121106	12.00	22.00	4.00	7.00	1.00	1.00	NBR	WPS-7041
W110121001	12.70	21.43	4.00	6.00	1.00	1.00	NBR	WPS-5349
W110131101	13.00	20.00	4.00	7.00	1.00	1.00	NBR	WPS-3502
W11014L502	14.00	20.00	2.60	5.00	1.00	1.00	PU	WPH-896
W11014L501	14.00	20.00	3.10	5.00	1.00	1.00	PU	WPH-694
W110141101	14.00	20.00	3.10	5.00	1.00	1.00	NBR	WPS-5731
W110141103	14.00	20.00	3.50	5.00	1.00	1.00	NBR	WPS-2882
W110146702	14.00	22.00	4.00	7.00	1.00	1.00	FKM	WPS-3582
W11014L503	14.00	22.00	4.00	7.00	1.00	1.00	PU	WPH-1590
W110141102	14.00	22.00	4.00	7.30	1.00	1.00	NBR	WPS-5397
W11015L501	15.00	23.00	4.00	7.00	1.00	1.00	PU	WPH-1238
W110156701	15.00	23.00	4.00	7.00	1.00	1.00	FKM	WPS-3443
W110151101	15.00	23.00	4.00	7.00	1.00	1.00	NBR	WPS-7336
W110161103	16.00	22.00	3.10	5.00	1.00	1.00	NBR	WPS-2894
W11016L501	16.00	24.00	4.00	7.00	1.00	1.00	PU	WPH-253
W110161101	**16.00**	**24.00**	**4.00**	**7.00**	**1.00**	**1.00**	**NBR**	**WPS-800**
W11016T201	16.00	24.00	4.00	7.00	1.00	1.00	VMQ	WPS-4298
W110176601	17.00	25.00	4.00	7.00	1.00	1.00	FKM	WPS-2840
W110181105	18.00	24.00	2.50	5.00	1.00	1.00	NBR	WPS-2662
W11018L502	18.00	24.00	3.10	5.00	1.00	1.00	PU	WPH-2675
W110181106	18.00	24.00	5.00	7.00	1.00	1.00	NBR	WPS-2862
W110186702	18.00	26.00	4.00	7.00	1.00	1.00	FKM	WPS-3250
W11018L501	18.00	26.00	4.00	7.00	1.00	1.00	PU	WPH-476
W110181102	**18.00**	**26.00**	**4.00**	**7.00**	**1.00**	**1.00**	**NBR**	**WPS-880**
W110186701	18.00	26.00	4.00	7.00	1.00	1.00	FKM	WPS-2475
W110181107	18.00	28.00	5.00	7.00	1.00	1.00	NBR	WPS-3085
W11020L502	20.00	26.00	2.60	5.00	1.00	1.00	PU	WPH-908
W110206703	20.00	26.00	3.10	5.00	1.00	1.00	FKM	WPS-2892

Part No.	d (f8)	D (H9)	L (+0.2)	H	T (+0.2)	W	Matl.	Mould No.
W110201104	20.00	28.00	4.00	5.00	1.00	1.00	NBR	WPS-5608
W110206701	20.00	28.00	4.00	7.00	1.00	1.00	FKM	WPS-1250
W110205901	20.00	28.00	4.00	7.00	1.00	1.00	PU	WPH-258
W11020T201	20.00	28.00	4.00	7.00	1.00	1.00	VMQ	WPS-4256
W110201101	**20.00**	**28.00**	**4.00**	**7.00**	**1.00**	**1.00**	**NBR**	**WPS-744**
W110206701	20.00	28.00	4.00	7.00	1.00	1.00	FKM	WPS-4119
W110201103	20.00	30.00	7.00	10.00	1.00	1.00	NBR	WPS-3637
W110226801	22.00	30.00	3.63	7.00	1.00	1.00	FKM	WPS-2588
W110226602	22.00	30.00	4.00	7.00	1.00	1.00	FKM	WPS-2820
W11022L501	22.00	30.00	4.00	7.00	1.00	1.00	PU	WPH-1026
W110221101	**22.00**	**30.00**	**4.00**	**7.00**	**1.00**	**1.00**	**NBR**	**WPS-763**
W110226702	22.00	30.00	5.50	7.00	1.00	1.00	FKM	WPS-6973
W11022L505	22.00	32.00	4.00	5.00	1.00	1.00	PU	WPH-2450
W110246702	24.00	31.00	4.00	5.00	1.00	1.00	FKM	WPS-6495
W110251106	25.00	31.20	5.00	6.00	1.00	1.00	NBR	WPS-3203
W110256703	25.00	32.00	4.00	5.00	1.00	1.00	FKM	WPS-6496
W110251110	25.00	32.50	1.60	3.00	1.00	1.00	NBR	WPS-7003
W110255903	25.00	33.00	3.75	7.00	1.00	1.00	PU	WPH-1408
W110255903	25.00	33.00	3.75	7.00	1.00	1.00	PU	WPH-1499
W110251108	25.00	33.00	4.00	5.00	1.00	1.00	NBR	WPS-6339
W110253401	25.00	33.00	4.00	7.00	1.00	1.00	EPDM	WPS-6911
W11025L501	25.00	33.00	4.00	7.00	1.00	1.00	PU	WPH-259
W110255902	25.00	33.00	4.00	7.00	1.00	1.00	PU	WPH-1396
W110251001	25.00	33.00	4.00	7.00	1.00	1.00	NBR	WPS-2837
W110251101	**25.00**	**33.00**	**4.00**	**7.00**	**1.00**	**1.00**	**NBR**	**WPS-685**
W11025L503	25.00	33.60	5.00	8.00	1.00	1.00	PU	WPH-2237
W110256603	25.00	34.00	3.80	8.70	1.00	1.00	FKM	WPS-7220
W110255904	25.00	34.00	5.20	11.34	1.00	1.00	PU	WPH-1860
W110256702	25.00	34.50	3.50	8.00	1.00	1.00	FKM	WPS-6237
W110251109	25.00	35.00	2.30	7.00	1.00	1.00	NBR	WPS-6694
W110256704	25.00	35.00	7.00	10.00	1.00	1.00	FKM	WPS-6877
W110256602	25.00	38.00	3.00	8.50	1.00	1.00	FKM	WPS-3847
W11028X401	28.00	34.00	3.50	8.00	1.00	1.00	PU	WPH-2751
W110281106	28.00	35.50	3.70	6.80	1.00	1.00	NBR	WPS-4802
W110281103	28.00	36.00	3.50	6.50	1.00	1.00	NBR	WPS-2204
W110281101	**28.00**	**36.00**	**4.00**	**7.00**	**1.00**	**1.00**	**NBR**	**WPS-671**
W11028L502	28.00	36.00	4.00	7.00	1.00	1.00	PU	WPH-260
W110280801	28.00	36.00	4.00	7.00	1.00	1.00	NBR	WPS-2807
W110286701	28.00	36.00	4.00	7.00	1.00	1.00	FKM	WPS-1966
W110281105	28.50	45.00	10.00	12.00	1.00	1.00	NBR	WPS-3245
W110291101	29.00	34.00	4.00	5.00	1.00	1.00	NBR	WPS-6689
W11030L503	30.00	36.00	2.30	5.00	1.00	1.00	PU	WPH-2196
W110306701	30.00	37.30	4.00	7.00	1.00	1.00	FKM	WPS-2179
W110301102	30.00	37.50	1.60	3.00	1.00	1.00	NBR	WPS-7004
W110306704	30.00	38.00	3.00	7.00	1.00	1.00	FKM	WPS-4913
W11030L502	30.00	38.00	4.00	5.00	1.00	1.00	PU	WPH-1832
W11030L509	30.00	38.00	4.00	5.00	1.00	1.00	PU	WPH-1032
W11030L501	30.00	38.00	4.00	7.00	1.00	1.00	PU	WPH-261
W110306702	30.00	38.00	4.00	7.00	1.00	1.00	FKM	WPS-1637
W11030T201	30.00	38.00	4.00	7.00	1.00	1.00	VMQ	WPS-422
W110301101	**30.00**	**38.00**	**4.00**	**7.00**	**1.00**	**1.00**	**NBR**	**WPS-762**
W11030L401	30.00	38.30	4.00	7.00	1.00	1.00	PU	WPH-1446

Bold sizes are readily available in stock.
Other materials are available on request.

W11

Medium Duty Wiper Seal

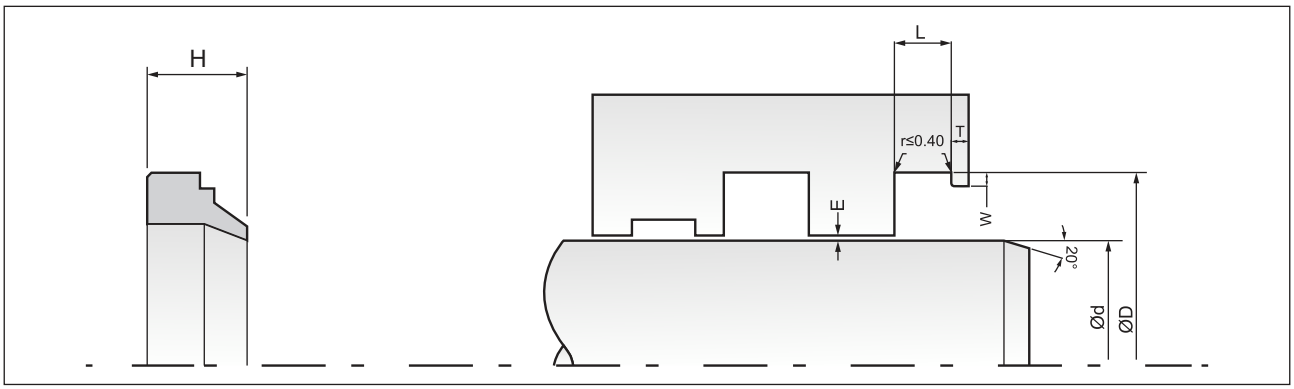

Part No.	d (f8)	D (H9)	L (+0.2)	H	T (+0.2)	W	Matl.	Mould No.
W11030L505	30.00	40.00	4.00	5.00	1.00	1.00	PU	WPH-2424
W11030L508	30.00	47.00	5.50	10.00	1.00	1.00	PU	WPH-2449
W110325901	32.00	40.00	4.00	5.00	1.00	1.00	PU	WPH-1405
W110326702	32.00	40.00	4.00	5.00	1.00	1.00	FKM	WPS-4471
W11032L501	32.00	40.00	4.00	6.00	1.00	1.00	PU	WPH-1415
W110321101	32.00	40.00	4.00	7.00	1.00	1.00	NBR	WPS-5634
W110321001	32.00	40.00	4.00	7.00	1.00	1.00	NBR	WPS-2838
W110326701	32.00	40.00	4.00	7.00	1.00	1.00	FKM	WPS-2765
W110321101	**32.00**	**40.00**	**4.00**	**7.00**	**1.00**	**1.00**	**NBR**	**WPS-2155**
W110321104	32.00	43.00	5.00	7.50	1.00	1.00	NBR	WPS-3256
W110331101	33.00	40.50	1.60	3.00	1.00	1.00	NBR	WPS-7005
W110341101	34.00	42.00	3.80	7.00	1.00	1.00	NBR	WPS-6398
W110351102	35.00	42.50	1.60	3.00	1.00	1.00	NBR	WPS-7006
W11035L501	35.00	43.00	4.00	6.00	1.00	1.00	PU	WPH-262
W110351101	**35.00**	**43.00**	**4.00**	**7.00**	**1.00**	**1.00**	**NBR**	**WPS-831**
W110351101	35.00	43.00	4.00	7.00	1.00	1.00	NBR	WPS-5802
W11035L505	35.00	45.00	4.00	7.00	1.00	1.00	PU	WPH-2420
W11036L505	36.00	44.00	3.70	7.00	1.00	1.00	PU	WPH-2188
W11036L506	36.00	44.00	3.90	7.30	1.00	1.00	PU	WPH-2477
W110366702	36.00	44.00	4.00	5.00	1.00	1.00	FKM	WPS-3543
W110361101	**36.00**	**44.00**	**4.00**	**5.00**	**1.00**	**1.00**	**NBR**	**WPS-670**
W110365901	36.00	44.00	4.00	5.00	1.00	1.00	PU	WPH-1418
W11036L503	36.00	44.00	4.00	5.00	1.00	1.00	PU	WPH-1530
W11036L502	36.00	44.00	4.00	5.00	1.00	1.00	PU	WPH-1592
W110366603	36.00	44.00	4.00	6.00	1.00	1.00	FKM	WPS-4441
W11036L504	36.00	44.00	4.00	7.00	1.00	1.00	PU	WPH-1288
W110366701	36.00	44.00	4.00	7.00	1.00	1.00	FKM	WPS-1578
W110366602	36.00	45.00	3.70	7.00	1.00	1.00	FKM	WPS-6182
W11038L501	38.00	46.00	4.00	5.00	1.00	1.00	PU	WPH-573
W110385902	38.00	46.00	4.00	5.00	1.00	1.00	PU	WPH-1406
W110381101	**38.00**	**46.00**	**4.00**	**7.00**	**1.00**	**1.00**	**NBR**	**WPS-1976**
W110381102	38.10	50.80	5.00	10.00	1.00	1.00	NBR	WPS-6986
W110401103	40.00	47.50	1.60	3.00	1.00	1.00	NBR	WPS-7007
W110406703	40.00	48.00	4.00	5.00	1.00	1.00	FKM	WPS-6567
W110405902	40.00	48.00	4.00	5.00	1.00	1.00	PU	WPH-1179
W110405905	40.00	48.00	4.00	7.00	1.00	1.00	PU	WPH-2390
W11040L501	40.00	48.00	4.00	7.00	1.00	1.00	PU	WPH-120
W110401101	**40.00**	**48.00**	**4.00**	**7.00**	**1.00**	**1.00**	**NBR**	**WPS-6507**
W110403201	40.00	48.00	4.00	7.00	1.00	1.00	EPDM	WPS-172
W11040L505	40.00	50.00	4.00	7.00	1.00	1.00	PU	WPH-2419
W110425901	42.00	50.00	4.00	5.00	1.00	1.00	PU	WPH-229
W11042L503	42.00	50.00	4.00	7.00	1.00	1.00	PU	WPH-2841
W110425902	42.00	50.00	4.00	7.00	1.00	1.00	PU	WPH-723
W110421101	**42.00**	**50.00**	**4.00**	**7.00**	**1.00**	**1.00**	**NBR**	**WPS-1653**
W110448701	44.30	62.90	9.30	14.00	1.00	1.00	PU	WPH-2769
W110441102	44.30	62.90	9.30	14.00	1.00	1.00	NBR	WPS-7230
W110441101	44.45	57.15	5.00	10.00	1.00	1.00	NBR	WPS-6987
W110451103.	45.00	52.50	1.60	3.00	1.00	1.00	NBR	WPS-7008
W110451104	45.00	52.60	4.00	7.00	1.00	1.00	NBR	WPS-7367
W11045L401	45.00	53.00	3.50	7.00	1.00	1.00	PU	WPH-1625
W110456701	45.00	53.00	4.00	5.00	1.00	1.00	FKM	WPS-4906
W110451102	**45.00**	**53.00**	**4.00**	**7.00**	**1.00**	**1.00**	**NBR**	**WPS-832**

Part No.	d (f8)	D (H9)	L (+0.2)	H	T (+0.2)	W	Matl.	Mould No.
W110456706	45.00	53.00	4.00	7.00	1.00	1.00	FKM	WPS-5165
W11045L501	45.00	53.00	4.00	7.00	1.00	1.00	PU	WPH-264
W110451102	45.00	53.00	4.00	7.00	1.00	1.00	NBR	WPS-5632
W110456701	45.00	53.00	4.00	7.00	1.00	1.00	FKM	WPS-2891
W110456703	45.00	54.00	3.75	5.00	1.00	1.00	FKM	WPS-3738
W110456702	45.00	54.00	4.00	5.20	1.00	1.00	FKM	WPS-5597
W110456705	45.00	55.00	4.00	7.00	1.00	1.00	FKM	WPS-4904
W110451103	45.00	55.00	5.00	7.00	1.00	1.00	NBR	WPS-229
W110451101	**45.00**	**57.00**	**5.50**	**10.00**	**1.00**	**1.00**	**NBR**	**WPS-1442**
W110456704	45.00	57.00	5.50	10.00	1.00	1.00	FKM	WPS-4568
W110481104	48.00	56.00	3.80	4.80	1.00	1.00	NBR	WPS-3251
W110481102	48.00	56.00	4.00	7.00	1.00	1.00	NBR	WPS-2928
W110481101	48.00	56.00	4.00	7.00	1.00	1.00	NBR	WPS-1217
W110481103	48.00	58.00	4.00	7.00	1.00	1.00	NBR	WPS-2966
W110486701	48.00	58.60	4.30	7.50	1.00	1.00	FKM	WPS-6214
W11050L502	50.00	58.00	3.80	7.00	1.00	1.00	PU	WPH-1684
W110505902	50.00	58.00	4.00	5.00	1.00	1.00	PU	WPH-2680
W110506701	50.00	58.00	4.00	7.00	1.00	1.00	NBR	WPS-1317
W110501101	**50.00**	**58.00**	**4.00**	**7.00**	**1.00**	**1.00**	**NBR**	**WPS-494**
W11050L501	50.00	58.00	4.00	7.00	1.00	1.00	PU	WPH-266
W110501106	50.00	60.00	5.00	8.00	1.00	1.00	NBR	WPS-4786
W110501104	50.00	60.00	7.00	10.00	1.00	1.00	NBR	WPS-2272
W110501105	50.00	62.00	5.00	7.00	1.00	1.00	NBR	WPS-4056
W11050L505	50.00	63.00	4.00	7.50	1.00	1.00	PU	WPH-2483
W110506702	50.80	59.00	3.90	7.10	1.00	1.00	FKM	WPS-4956
W110506703	50.80	60.30	3.17	6.35	1.00	1.00	FKM	WPS-7055
W110511001	51.00	59.00	4.00	7.00	1.00	1.00	NBR	WPS-2112
W110541101	54.00	62.00	4.00	7.00	1.00	1.00	NBR	WPS-4538
W110541101	54.00	62.00	4.00	7.00	1.00	1.00	NBR	WPS-2133
W110556701	55.00	63.00	4.00	7.00	1.00	1.00	FKM	WPS-3529
W110551101	**55.00**	**63.00**	**4.00**	**7.00**	**1.00**	**1.00**	**NBR**	**WPS-1011**
W11055L501	55.00	63.00	4.00	7.00	1.00	1.00	PU	WPH-268
W110556702	55.00	64.00	4.00	7.00	1.00	1.00	FKM	WPS-5338
W110551102	55.00	65.00	2.15	4.00	1.00	1.00	NBR	WPS-7009
W11056L501	56.00	64.00	4.00	7.00	1.00	1.00	PU	WPH-1614
W110566702	56.00	64.00	4.00	7.00	1.00	1.00	FKM	WPS-1553
W110561101	**56.00**	**64.00**	**4.00**	**7.00**	**1.00**	**1.00**	**NBR**	**WPS-1077**
W110561101	56.00	64.00	6.00	7.00	1.00	1.00	NBR	WPS-5616
W110561103	56.00	66.00	2.15	4.00	1.00	1.00	NBR	WPS-7010
W110566705	56.00	66.00	4.00	7.50	1.00	1.00	FKM	WPS-6476
W110566704	56.00	66.60	5.30	7.00	1.00	1.00	FKM	WPS-3497
W11056L502	56.00	68.00	4.00	6.00	1.00	1.00	PU	WPH-2484
W110571101	57.00	67.00	2.15	4.00	1.00	1.00	NBR	WPS-7011
W11058L401	58.00	66.00	4.00	5.00	1.00	1.00	PU	WPH-1104
W11060L504	60.00	68.00	4.00	5.00	1.00	1.00	PU	WPH-2530
W110601101	**60.00**	**68.00**	**4.00**	**7.00**	**1.00**	**1.00**	**NBR**	**WPS-1965**
W110601101	60.00	68.00	4.00	7.00	1.00	1.00	NBR	WPS-5839
W110606701	60.00	68.00	4.00	7.00	1.00	1.00	FKM	WPS-6895
W11060L501	60.00	68.00	4.00	7.00	1.00	1.00	PU	WPH-208
W110606702	60.00	68.00	4.00	7.25	1.00	1.00	FKM	WPS-5201
W11060L502	60.00	68.00	5.00	8.00	1.00	1.00	PU	WPH-1640
W110601102	60.00	70.00	2.15	4.00	1.00	1.00	NBR	WPS-7012

Bold sizes are readily available in stock.
Other materials are available on request.

W11

Medium Duty Wiper Seal

MAX SPARE LIMITED
QUALITY. PRECISION. SPEED.

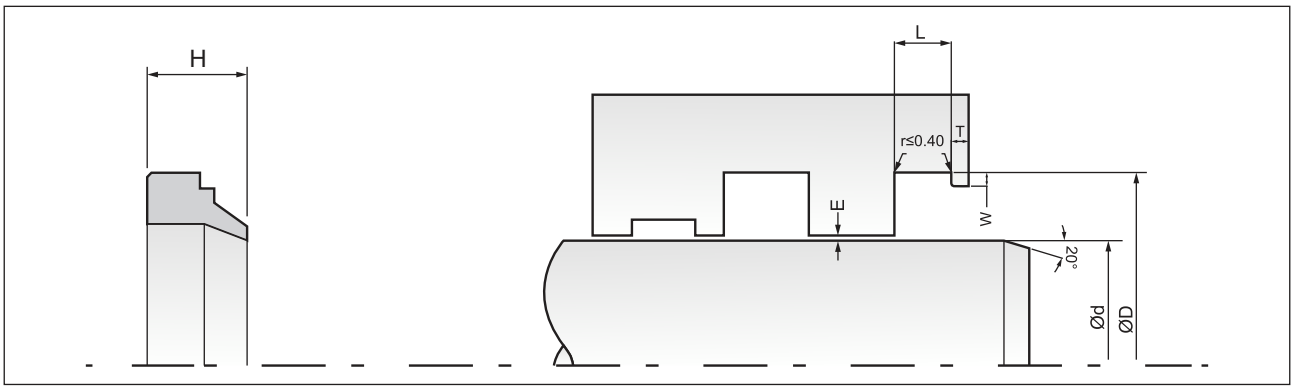

Part No.	d (f8)	D (H9)	L (+0.2)	H	T (+0.2)	W	Matl.	Mould No.
W110635901	63.00	71.00	4.00	5.00	1.00	1.00	PU	WPH-1031
W11063L501	63.00	71.00	4.00	7.00	1.00	1.00	PU	WPH-966
W110636701	63.00	71.00	4.00	7.00	1.00	1.00	FKM	WPS-2551
W110631101	**63.00**	**71.00**	**4.00**	**7.00**	**1.00**	**1.00**	**NBR**	**WPS-808**
W110636702	63.00	73.00	4.00	7.00	1.00	1.00	FKM	WPS-3591
W110631105	63.50	70.00	2.50	4.00	1.00	1.00	NBR	WPS-2387
W110651104	65.00	73.00	4.00	5.00	1.00	1.00	NBR	WPS-5817
W110651103	65.00	73.00	4.00	7.00	1.00	1.00	NBR	WPS-3789
W110651101	**65.00**	**73.00**	**4.00**	**7.00**	**1.00**	**1.00**	**NBR**	**WPS-924**
W110656701	65.00	73.00	4.00	7.00	1.00	1.00	FKM	WPS-5732
W110651105	65.00	75.00	2.15	4.00	1.00	1.00	NBR	WPS-7013
W11070D601	70.00	78.00	4.00	5.00	1.00	1.00	HNBR	WPS-5114
W11070L502	70.00	78.00	4.00	6.00	1.00	1.00	PU	WPH-955
W110705902	70.00	78.00	4.00	7.00	1.00	1.00	PU	WPH-2391
W11070L501	70.00	78.00	4.00	7.00	1.00	1.00	PU	WPH-271
W110701102	**70.00**	**78.00**	**4.00**	**7.00**	**1.00**	**1.00**	**NBR**	**WPS-751**
W110706601	70.00	78.00	4.00	7.00	1.00	1.00	FKM	WPS-3082
W110701104	70.00	80.00	2.15	4.00	1.00	1.00	NBR	WPS-7014
W110706602	70.00	80.00	4.00	5.00	1.00	1.00	FKM	WPS-4998
W110701103	70.00	80.00	5.00	7.00	1.00	1.00	NBR	WPS-5635
W110701103.	70.00	80.00	6.00	8.00	1.00	1.00	NBR	WPS-7213
W110756704	75.00	82.00	3.70	5.60	1.00	1.00	FKM	WPS-7377
W110756703	75.00	82.00	4.00	5.60	1.00	1.00	FKM	WPS-6701
W110756702	75.00	83.00	3.70	5.85	1.00	1.00	FKM	WPS-4423
W110751101	**75.00**	**83.00**	**4.00**	**7.00**	**1.00**	**1.00**	**NBR**	**WPS-1076**
W110755901	75.00	83.00	4.00	7.00	1.00	1.00	PU	WPH-2660
W110781101	78.00	86.00	4.00	5.00	1.00	1.00	NBR	WPS-4828
W110781102	78.00	86.00	4.00	7.00	1.00	1.00	NBR	WPS-7000
W110801103	80.00	88.00	4.00	5.00	1.00	1.00	NBR	WPS-5984
W11080L401	80.00	88.00	4.00	5.00	1.00	1.00	PU	WPH-725
W110801102	**80.00**	**88.00**	**4.00**	**7.00**	**1.00**	**1.00**	**NBR**	**WPS-777**
W110806701	80.00	88.00	4.00	7.00	1.00	1.00	FKM	WPS-3604
W110801104	80.00	90.00	2.15	4.00	1.00	1.00	NBR	WPS-7015
W110801101	80.00	92.00	5.50	10.00	1.00	1.00	NBR	WPS-5312
W11080L505	80.00	100.00	5.50	7.00	1.00	1.00	PU	WPH-2482
W110831101	83.00	91.00	4.00	7.00	1.00	1.00	NBR	WPS-2193
W110851101	**85.00**	**93.00**	**4.00**	**7.00**	**1.00**	**1.00**	**NBR**	**WPS-326**
W11086L501	86.00	94.00	4.00	5.00	1.00	1.00	PU	WPH-2228
W110888701	88.90	107.95	8.50	16.00	1.00	1.00	PU	WPH-1589
W110906706	90.00	96.00	4.50	8.00	1.00	1.00	FKM	WPS-4602
W110906703	90.00	98.00	3.75	6.80	1.00	1.00	FKM	WPS-3535
W110901102	90.00	98.00	4.00	5.00	1.00	1.00	NBR	WPS-5976
W110906701	90.00	98.00	4.00	7.00	1.00	1.00	FKM	WPS-2476
W110901101	**90.00**	**98.00**	**4.00**	**7.00**	**1.00**	**1.00**	**NBR**	**WPS-737**
W11090L502	90.00	98.00	4.00	7.00	1.00	1.00	PU	WPH-278
W110901101	90.00	98.00	4.00	7.00	1.00	1.00	NBR	WPS-5627
W110906702	90.00	98.00	5.00	6.00	1.00	1.00	FKM	WPS-3521
W110901103	90.00	98.00	6.00	8.00	1.00	1.00	NBR	WPS-6666
W110906708	90.00	99.00	4.00	7.00	1.00	1.00	FKM	WPS-6478
W110901105	90.00	100.00	2.15	4.00	1.00	1.00	NBR	WPS-7016
W110906709	90.00	100.00	6.00	11.00	1.00	1.00	FKM	WPS-7159
W110906710	90.00	102.00	3.80	8.00	1.00	1.00	FKM	WPS-7452

Part No.	d (f8)	D (H9)	L (+0.2)	H	T (+0.2)	W	Matl.	Mould No.
W110901104	90.00	102.00	5.50	10.00	1.00	1.00	NBR	WPS-6874
W110906705	90.00	102.20	7.20	12.00	2.00	2.00	FKM	WPS-4003
W110906707	90.00	103.50	7.00	13.00	2.00	2.00	FKM	WPS-5329
W11090L505	90.00	106.00	4.00	6.00	1.00	1.00	PU	WPH-2487
W110921101	92.00	100.00	4.00	7.00	1.00	1.00	NBR	WPS-3312
W11092L501	92.00	100.00	4.00	7.00	1.00	1.00	PU	WPH-2386
W110921103	92.00	102.00	5.00	7.00	1.00	1.00	NBR	WPS-3288
W110935901	93.00	101.00	4.00	7.00	1.00	1.00	PU	WPH-1689
W110951101	**95.00**	**103.00**	**4.00**	**7.00**	**1.00**	**1.00**	**NBR**	**WPS-932**
W11095L501	95.00	107.00	7.00	8.00	1.00	1.00	PU	WPH-2486
W11100L502	100.00	108.00	4.00	5.00	1.00	1.00	PU	WPH-2710
W11100D601	100.00	108.00	4.00	5.00	1.00	1.00	HNBR	WPS-5038
W111001101	100.00	108.00	4.00	7.00	1.00	1.00	NBR	WPS-1013
W11100L501	100.00	108.00	4.00	7.00	1.00	1.00	PU	WPH-207
W111001101	**100.00**	**108.00**	**4.00**	**7.00**	**1.00**	**1.00**	**NBR**	**WPS-3016**
W111001102	100.00	110.00	2.15	4.00	1.00	1.00	NBR	WPS-7002
W111005902	100.00	112.00	7.50	13.00	2.00	2.00	PU	WPH-1501
W111051101	**105.00**	**117.00**	**5.50**	**10.00**	**1.50**	**1.50**	**NBR**	**WPS-1977**
W111056701	105.00	117.00	5.50	10.00	1.50	1.50	FKM	WPS-4671
W111055901	105.00	117.00	5.50	10.00	1.50	1.50	PU	WPH-1779
W111051102	105.00	120.00	7.20	12.00	1.50	1.50	NBR	WPS-6875
W111101103	**110.00**	**117.00**	**8.20**	**11.00**	**1.50**	**1.50**	**NBR**	**WPS-1979**
W111106703	110.00	118.00	4.00	5.00	1.00	1.00	FKM	WPS-4363
W111101101	**110.00**	**118.00**	**4.00**	**7.00**	**1.00**	**1.00**	**NBR**	**WPS-1075**
W111106702	110.00	120.00	5.00	7.00	1.50	1.50	FKM	WPS-3695
W111101102	**110.00**	**122.00**	**5.50**	**10.00**	**1.50**	**1.50**	**NBR**	**WPS-1142**
W111106701	110.00	122.00	5.50	10.00	1.50	1.50	FKM	WPS-3517
W111141101	114.00	122.00	4.00	7.00	1.00	1.00	NBR	WPS-4467
W111151101	**115.00**	**127.00**	**5.50**	**10.00**	**1.50**	**1.50**	**NBR**	**WPS-1004**
W111206701	120.00	130.60	5.30	7.00	1.00	1.00	FKM	WPS-3644
W111201101	**120.00**	**132.00**	**5.50**	**10.00**	**1.50**	**1.50**	**NBR**	**WPS-904**
W111206702	120.00	132.00	5.50	11.20	1.50	1.50	FKM	WPS-5095
W11120L501	120.00	132.00	6.00	11.00	1.50	1.50	PU	WPH-2099
W111256701	125.00	137.00	5.00	7.00	1.50	1.50	FKM	WPS-3243
W111256702	125.00	137.00	5.30	10.20	1.50	1.50	FKM	WPS-3319
W111251101	**125.00**	**137.00**	**5.50**	**10.00**	**1.50**	**1.50**	**NBR**	**WPS-940**
W111256703	125.00	137.00	5.50	10.00	1.50	1.50	FKM	WPS-4024
W111251103	125.00	137.00	7.50	12.00	1.50	1.50	NBR	WPS-3678
W111251102	125.00	140.00	9.50	12.00	1.50	1.50	NBR	WPS-2751
W111275901	127.70	140.00	5.50	10.00	1.50	1.50	PU	WPH-726
W111285901	128.00	140.00	5.50	10.00	1.50	1.50	PU	WPH-1068
W11128L501	128.00	140.00	5.50	10.00	1.50	1.50	PU	WPH-2229
W111301101	**130.00**	**142.00**	**5.50**	**10.00**	**1.50**	**1.50**	**NBR**	**WPS-1069**
W111306701	130.00	142.00	5.50	10.00	1.50	1.50	FKM	WPS-3452
W111351101	**135.00**	**147.00**	**5.50**	**10.00**	**1.50**	**1.50**	**NBR**	**WPS-1975**
W111355901	135.00	148.00	7.00	9.50	1.50	1.50	PU	WPH-811
W111401102	140.00	150.00	2.15	4.00	1.50	1.50	NBR	WPS-7017
W11140L503	140.00	152.00	5.00	6.00	1.50	1.50	PU	WPH-1554
W111401101	**140.00**	**152.00**	**5.50**	**10.00**	**1.50**	**1.50**	**NBR**	**WPS-1071**
W111406702	140.00	152.00	5.50	10.00	1.50	1.50	FKM	WPS-3681
W111406703	140.00	153.00	5.00	9.30	1.50	1.50	FKM	WPS-5436
W111405901	140.00	153.00	7.00	9.50	1.50	1.50	PU	WPH-812

Bold sizes are readily available in stock.
Other materials are available on request.

W11

Medium Duty Wiper Seal

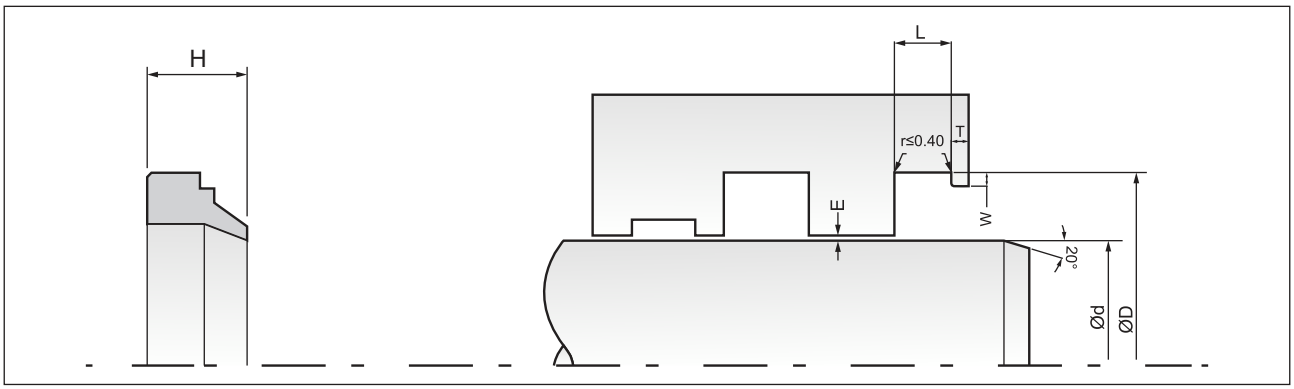

Part No.	d (f8)	D (H9)	L (+0.2)	H	T (+0.2)	W	Matl.	Mould No.
W111405902	140.00	155.00	7.00	9.50	1.50	1.50	PU	WPH-813
W11140L502	140.00	155.00	9.50	13.00	2.00	2.00	PU	WPH-891
W111456701	145.00	157.00	5.00	7.00	1.50	1.50	FKM	WPS-6585
W111501101	**150.00**	**162.00**	**5.50**	**10.00**	**1.50**	**1.50**	**NBR**	**WPS-1070**
W11150L501	150.00	165.00	10.20	16.00	2.00	2.00	PU	WPH-1407
W111605901	160.00	172.00	5.50	10.00	1.50	1.50	PU	WPH-1069
W111601101	**160.00**	**172.00**	**5.50**	**10.00**	**1.50**	**1.50**	**NBR**	**WPS-1072**
W111601102	160.00	174.00	7.00	13.50	1.50	1.50	NBR	WPS-2730
W111651101	165.00	177.00	5.30	10.00	1.50	1.50	NBR	WPS-4848
W111656701	165.00	177.00	5.50	10.00	1.50	1.50	FKM	WPS-4042
W111701101	**170.00**	**182.00**	**5.50**	**10.00**	**1.50**	**1.50**	**NBR**	**WPS-1073**
W111806701	180.00	190.00	7.00	10.00	1.50	1.50	FKM	WPS-3522
W111801101	**180.00**	**192.00**	**5.50**	**10.00**	**1.50**	**1.50**	**NBR**	**WPS-1074**
W111901101	**190.00**	**202.00**	**5.50**	**10.00**	**1.50**	**1.50**	**NBR**	**WPS-1974**
W112001101	**200.00**	**212.00**	**5.50**	**10.00**	**1.50**	**1.50**	**NBR**	**WPS-1235**
W112005901	200.00	212.00	5.50	10.00	1.50	1.50	PU	WPH-1949
W112006701	200.00	212.00	5.50	10.00	1.50	1.50	FKM	WPS-6377
W112101102	**210.00**	**225.00**	**6.50**	**13.00**	**1.50**	**1.50**	**NBR**	**WPS-1973**
W112156701	215.00	230.00	6.80	13.00	1.50	1.50	FKM	WPS-3507
W112201101	**220.00**	**235.00**	**6.50**	**13.00**	**1.50**	**1.50**	**NBR**	**WPS-825**
W112206701	220.00	235.00	6.50	13.00	1.50	1.50	FKM	WPS-6708
W112205901	220.00	235.00	6.50	13.00	1.50	1.50	PU	WPH-1650
W112255901	225.00	240.00	6.50	13.00	1.50	1.50	PU	WPH-1453

Part No.	d (f8)	D (H9)	L (+0.2)	H	T (+0.2)	W	Matl.	Mould No.
W112306701	230.00	245.00	6.50	13.00	1.50	1.50	FKM	WPS-3181
W112301101	**230.00**	**245.00**	**6.50**	**13.00**	**1.50**	**1.50**	**NBR**	**WPS-1972**
W112401101	**240.00**	**255.00**	**6.50**	**13.00**	**1.50**	**1.50**	**NBR**	**WPS-1971**
W112461101	246.00	261.00	6.50	13.00	1.50	1.50	NBR	WPS-2335
W112506702	250.00	265.00	6.20	12.00	1.50	1.50	FKM	WPS-2257
W112506701	250.00	265.00	6.50	13.00	1.50	1.50	FKM	WPS-3182
W112501101	**250.00**	**265.00**	**6.50**	**13.00**	**1.50**	**1.50**	**NBR**	**WPS-1231**
W112601101	**260.00**	**275.00**	**6.50**	**13.00**	**1.50**	**1.50**	**NBR**	**WPS-1978**
W112701103	270.00	290.00	10.00	18.00	1.50	1.50	NBR	WPS-2859
W112806601	280.00	294.00	6.00	8.00	1.50	1.50	FKM	WPS-3276
W113001101	**300.00**	**315.00**	**6.50**	**13.00**	**1.50**	**1.50**	**NBR**	**WPS-1232**
W113046701	304.80	317.50	4.34	7.34	1.50	1.50	FKM	WPS-7183
W113041101	304.80	323.80	6.50	13.00	1.50	1.50	NBR	WPS-5778
W113101101	310.00	325.00	6.50	13.00	1.50	1.50	NBR	WPS-2163
W113461101	346.00	361.00	6.50	13.00	1.50	1.50	NBR	WPS-4150
W113501101	350.00	375.00	12.70	20.00	1.50	1.50	NBR	WPS-2693
W113651101	365.00	380.00	6.50	13.00	1.50	1.50	NBR	WPS-2152
W114001101	**400.00**	**415.00**	**6.50**	**13.00**	**1.50**	**1.50**	**NBR**	**WPS-1233**
W114201101	420.00	435.00	6.50	13.00	1.50	1.50	NBR	WPS-5588
W114481101	448.00	464.00	6.70	12.50	1.50	1.50	NBR	WPS-2291
W114601101	460.00	476.00	6.00	8.00	1.50	1.50	NBR	WPS-6001
W115501101	550.00	565.00	6.50	13.00	1.50	1.50	NBR	WPS-4636

Bold sizes are readily available in stock.
Other materials are available on request.

W12

Medium Duty Wiper Seal

DETAILS

W12 wiper is a double function seal. This wiper is designed to exclude dirt and moisture from entering the cylinder and to collect traces of fluid passing the rod seal. Opposite the wiper lip are two sealing lips to collect fluid passing the rod seal. Providing a simple groove design and dual function, the type W12 wiper offers excellent scraping action, even with high accumulating dirt, dust and moisture conditions. Though the standard material is NBR. This wiper is also available in polyurethane. Due to excellent wear resistance properties of polyurethane, the life expected is 3 times than that of NBR. This wiper is also available in FKM (Viton) material for high temperature applications.

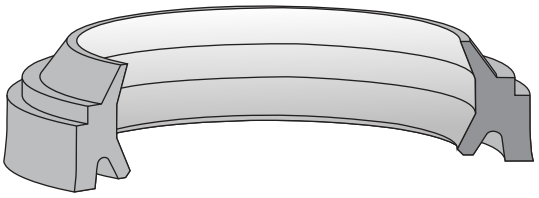

COMPATIBILITY

Mineral oils, bio oils, water soluble & water glycol fluids.

MATERIAL

Nitrile Rubber 85/90 Shore A
Polyurethane 92 Shore A

APPLICATION

- Medium duty seal (For heavy duty application, select polyurethane as the material).
- Hydraulic and Pneumatic cylinders.
- Standard cylinders.

OPERATING CONDITIONS

Temperature Range	:	-30°C to + 100°C
Speed	:	PU - 1.0 m/s
		NBR - 0.5 m/s

FEATURES

- General purpose seal.
- Good wiping performance.
- Twins lip ensures drier sealing system.
- No twisting in the groove.
- Good stability.
- Wide range of sizes.
- Easy installation.

SURFACE ROUGHNESS

Static	:	1.6 µmRa
Dynamic	:	0.4 µmRa

INSTALLATION & ASSEMBLY

W12 wiper seal can be easily fitted into the closed grooves by deforming it into kidney shape. The assembly tool must have no sharp edges. The seal must lubricate before installation.

W12

Medium Duty Wiper Seal

MAX SPARE LIMITED
QUALITY. PRECISION. SPEED.

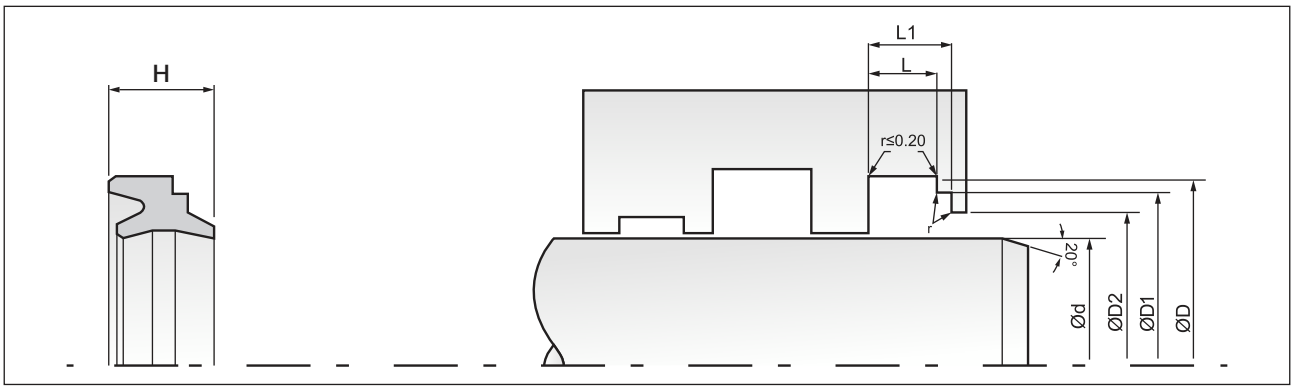

Part No.	d (f8)	D (H9)	L1 (+0.2)	L (+0.2)	D2 (H9)	D1 (H9)	H	Material	Mould No.
W12004L501	4.00	8.10	3.80	2.80	6.10	7.50	4.00	PU	WPH-1939
W120051101	5.00	11.00	4.40	3.30	8.50	9.00	5.50	NBR	WPS-5093
W12006L401	6.00	11.00	4.20	3.20	9.50	9.00	5.20	PU	WPH-1364
W120061101	6.00	11.00	4.40	3.30	9.50	9.00	5.50	NBR	WPS-4854
W12006L501	6.00	11.10	4.60	3.40	9.50	9.10	5.00	PU	WPH-1947
W12006L502	6.00	11.50	4.50	3.50	9.50	9.50	5.50	PU	WPH-2118
W120061103	6.00	15.00	5.00	4.00	9.50	13.00	6.00	NBR	WPS-7090
W120071101	7.00	12.00	5.00	3.50	10.50	10.00	6.00	NBR	WPS-4670
W12007L501	7.00	14.00	4.00	3.00	10.50	12.00	5.00	PU	WPH-1583
W12008L502	8.00	14.00	4.70	3.70	11.50	12.00	6.00	PU	WPH-1864
W120081102	8.00	14.00	4.20	3.00	11.50	12.00	5.00	NBR	WPS-3139
W12008L501	8.00	14.00	4.00	3.00	11.50	12.00	5.00	PU	WPH-1666
W120086701	8.00	14.00	4.00	3.00	11.50	12.00	5.00	FKM	WPS-2411
W12008L503	8.00	14.10	4.60	3.40	11.50	12.10	5.00	PU	WPH-1940
W120086702	8.00	14.20	4.00	3.20	11.50	12.20	5.00	FKM	WPS-6246
W120082301	8.00	14.20	4.60	3.60	11.50	12.20	5.00	CR	WPS-6436
W120081103	8.00	14.50	4.50	3.50	11.50	12.50	5.50	NBR	WPS-5094
W12009L501	9.00	16.00	5.00	3.80	12.50	14.00	6.00	PU	WPH-1751
W120101102	10.00	16.00	5.00	3.50	13.50	14.00	6.50	NBR	WPS-4287
W12010L402	10.00	16.00	5.00	3.80	13.50	14.00	6.20	PU	WPH-1397
W12010L403	10.00	16.00	5.00	3.80	13.50	14.00	6.50	PU	WPH-1675
W120106301	10.00	16.00	5.10	3.88	13.50	14.00	6.15	FKM	WPS-4448
W120101106	10.00	16.00	5.00	3.90	13.50	14.00	6.00	NBR	WPS-6107
W120101103	10.00	16.00	5.00	4.00	13.50	14.00	6.00	NBR	WPS-4398
W12010L502	10.00	16.00	5.00	4.00	13.50	14.00	6.00	PU	WPH-1543
W12010L501	10.00	16.00	5.00	4.00	13.50	14.00	6.20	PU	WPH-602
W120101104	10.00	16.00	5.00	4.00	13.50	14.00	6.50	NBR	WPS-5019
W120106701	10.00	16.00	6.00	4.00	13.50	14.00	7.00	FKM	WPS-4969
W12010L503	10.00	16.10	5.40	4.00	13.50	14.10	6.00	PU	WPH-1941
W120106702	10.00	16.20	4.50	3.80	13.50	14.20	6.20	FKM	WPS-3282
W120103201	10.00	16.20	5.40	4.00	13.50	14.20	6.00	EPDM	WPS-4426
W120101107	10.00	16.50	5.50	3.80	13.50	14.50	7.00	NBR	WPS-6508
W12010L505	10.00	16.50	5.30	4.00	13.50	14.50	6.00	PU	WPH-2331
W120101101	**10.00**	**18.00**	**6.00**	**4.00**	**13.50**	**16.00**	**8.00**	**NBR**	**WPS-2162**
W12012L501	12.00	16.50	3.60	2.80	15.50	14.50	4.00	PU	WPH-1942
W120126702	12.00	18.00	5.00	3.80	15.50	16.00	6.30	FKM	WPS-3928
W120121002	12.00	18.00	5.00	3.80	15.50	16.00	6.20	NBR	WPS-6649
W120121105	12.00	18.20	4.80	3.80	15.50	16.20	6.00	NBR	WPS-5555
W120126501	12.00	18.20	5.40	4.00	15.50	16.20	6.00	FKM	WPS-4170
W120121107	12.00	18.50	6.00	4.00	15.50	16.50	8.00	NBR	WPS-5716
W12012L401	12.00	19.00	4.00	3.00	15.50	17.00	5.00	PU	WPH-1365
W120124502	12.00	19.00	4.00	3.00	15.50	17.00	5.00	VMQ	WPS-7429
W120121102	12.00	20.00	4.80	3.00	15.50	18.00	6.80	NBR	WPS-3128
W120121103	12.00	20.00	5.00	4.00	15.50	18.00	8.00	NBR	WPS-3659
W120124501	12.00	20.00	6.00	4.00	15.50	18.00	8.00	VMQ	WPS-5987
W120120801	12.00	20.00	6.00	4.00	15.50	18.00	8.00	NBR	WPS-7115
W120126701	12.00	20.00	6.00	4.00	15.50	18.00	8.00	FKM	WPS-4563
W120121101	**12.00**	**20.00**	**6.00**	**4.00**	**15.50**	**18.00**	**8.00**	**NBR**	**WPS-2161**
W12012L502	12.00	23.00	4.50	3.20	15.50	21.00	5.50	PU	WPH-2217
W120131101	13.00	22.00	6.60	40.00	16.50	20.00	8.00	NBR	WPS-5611
W120141101	**14.00**	**22.00**	**6.00**	**4.00**	**17.50**	**20.00**	**8.00**	**NBR**	**WPS-1528**
W120151102	15.00	21.00	5.00	4.00	18.50	19.00	6.00	NBR	WPS-4399

NOTE: Step shown in groove design drawing to retain wiper may or may not be required. In case step is not designed, then groove width shall be 'L1' as shown in the tables.

Bold sizes are readily available in stock.
Other materials are available on request.

W12

Medium Duty Wiper Seal

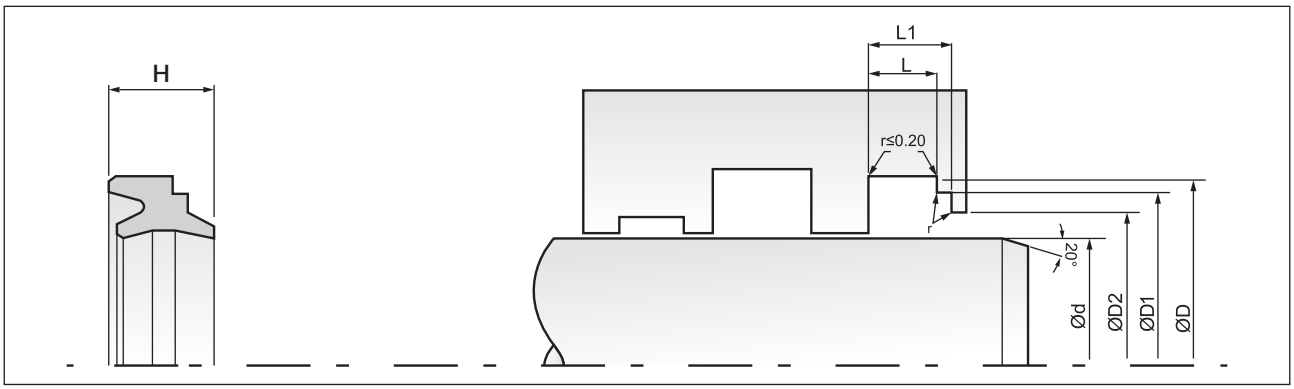

Part No.	d (f8)	D (H9)	L1 (+0.2)	L (+0.2)	D2 (H9)	D1 (H9)	H	Material	Mould No.
W120151101	**15.00**	**23.00**	**6.00**	**4.00**	**18.50**	**21.00**	**8.00**	**NBR**	**WPS-1529**
W12016L504	16.00	20.50	3.80	2.80	19.50	18.50	4.00	PU	WPH-1943
W120161110	16.00	22.00	4.00	3.00	19.50	20.00	5.00	NBR	WPS-5020
W12016L501	16.00	23.00	4.20	3.80	19.50	21.00	6.20	PU	WPH-1332
W120164601	16.00	23.00	6.60	3.80	19.50	21.00	6.20	VMQ	WPS-2303
W120161103	16.00	23.00	5.20	3.80	19.50	21.00	6.60	NBR	WPS-5755
W12016Q201	16.00	23.00	4.00	3.00	19.50	21.00	5.00	PU	WPH-2536
W12016L401	16.00	23.00	4.00	3.00	19.50	21.00	5.00	PU	WPH-1401
W120165903	16.00	23.00	5.00	4.20	19.50	21.00	6.00	PU	WPH-2643
W12166701	16.00	24.00	6.00	4.00	19.50	22.00	8.00	FKM	WPS-1420
W12016L506	16.00	24.00	6.00	4.00	19.50	22.00	8.00	PU	WPH-2797
W12016L503	16.00	24.00	7.00	6.00	19.50	22.00	8.00	PU	WPH-1773
W120161101	**16.00**	**24.00**	**6.00**	**4.00**	**19.50**	**22.00**	**8.00**	**NBR**	**WPS-996**
W120166702	16.00	25.00	6.00	4.00	19.50	23.00	8.00	FKM	WPS-6192
W120161104	16.00	26.00	6.00	5.00	19.50	24.00	8.00	NBR	WPS-1313
W12018L401	18.00	24.00	6.30	4.50	21.50	22.00	7.80	PU	WPH-1714
W120181102	18.00	25.00	6.00	4.00	21.50	23.00	8.00	NBR	WPS-6468
W120186701	18.00	26.00	6.00	4.00	21.50	24.00	8.00	FKM	WPS-4113
W12018L501	18.00	26.00	6.00	4.00	21.50	24.00	8.00	PU	WPH-2796
W120181101	**18.00**	**26.00**	**6.00**	**4.00**	**21.50**	**24.00**	**8.00**	**NBR**	**WPS-1106**
W12019Q201	19.00	27.00	4.30	3.40	22.50	25.00	6.00	PU	WPH-998
W12019L402	19.05	25.40	4.00	3.50	22.55	23.40	5.20	PU	WPH-1047
W12020L501	20.00	25.00	4.00	3.20	23.00	23.50	4.60	PU	WPH-1944
W120206701	20.00	28.00	6.00	4.00	23.50	26.00	8.00	FKM	WPS-4867
W120201102	20.00	28.00	8.00	5.72	23.50	26.00	8.00	NBR	WPS-2332
W120201101	**20.00**	**28.00**	**6.00**	**4.00**	**23.50**	**26.00**	**8.00**	**NBR**	**WPS-997**
W12020L504	20.00	29.00	6.00	4.00	23.50	27.00	8.00	PU	WPH-2422
W12020L401	20.00	29.00	6.00	5.00	23.50	27.00	7.00	PU	WPH-1319
W12020L503	20.00	30.00	5.70	4.70	23.50	28.00	7.00	PU	WPH-2122
W120201103	20.00	30.00	6.00	5.00	23.50	28.00	7.00	NBR	WPS-4985
W120226701	22.00	30.00	6.00	4.00	25.50	28.00	8.00	FKM	WPS-1418
W120221101	**22.00**	**30.00**	**6.00**	**4.00**	**25.50**	**28.00**	**8.00**	**NBR**	**WPS-959**
W12022L501	22.00	30.00	6.00	4.00	25.50	28.00	8.00	PU	WPH-2810
W12025L502	25.00	30.00	4.00	3.20	28.50	29.00	4.60	PU	WPH-1946
W120251104	25.00	30.00	4.00	3.20	28.50	29.00	4.60	NBR	WPS-5651
W120251106	25.00	32.00	5.80	3.80	28.50	30.00	8.00	NBR	WPS-6293
W120251105	25.00	33.00	5.00	4.00	28.50	31.00	6.00	NBR	WPS-6109
W120251102	25.00	33.00	6.00	4.00	28.50	31.00	7.70	NBR	WPS-4609
W120251101	25.00	33.00	6.00	4.00	28.50	31.00	8.00	NBR	WPS-3755
W120256702	25.00	33.00	6.00	4.00	28.50	31.00	8.00	FKM	WPS-1535
W120251101	25.00	33.00	6.00	4.00	28.50	31.00	8.00	NBR	WPS-5927
W120251101	25.00	33.00	6.00	4.00	28.50	31.00	8.00	NBR	WPS-5982
W120251134	25.00	33.00	7.20	5.50	28.50	31.00		NBR	WPS-5031
W120256703	25.00	33.00	6.00	5.00	28.50	31.00	7.00	FKM	WPS-6561
W12025L501	25.00	33.00	6.00	4.00	28.50	31.00	8.00	PU	WPH-2025
W12025L501	25.00	33.00	6.00	4.00	28.50	31.00	8.00	PU	WPH-445
W120251101	**25.00**	**33.00**	**6.00**	**4.00**	**28.50**	**31.00**	**8.00**	**NBR**	**WPS-1105**
W120255901	25.00	34.00	5.70	4.90	28.50	32.00	7.00	PU	WPH-2052
W120251001	25.00	34.00	6.00	4.00	28.50	32.00	7.00	NBR	WPS-2198
W120251103	25.00	36.00	6.00	4.00	28.50	34.00	8.00	NBR	WPS-4739
W12025L402	25.40	33.33	5.00	4.50	28.90	31.33	5.70	PU	WPH-1048
W12025L401	25.50	36.00	4.30	3.40	29.00	34.00	5.80	PU	WPH-1030

NOTE: Step shown in groove design drawing to retain wiper may or may not be required. In case step is not designed, then groove width shall be 'L1' as shown in the tables.

Bold sizes are readily available in stock.

Other materials are available on request.

W12

Medium Duty Wiper Seal

MAX SPARE LIMITED
QUALITY. PRECISION. SPEED.

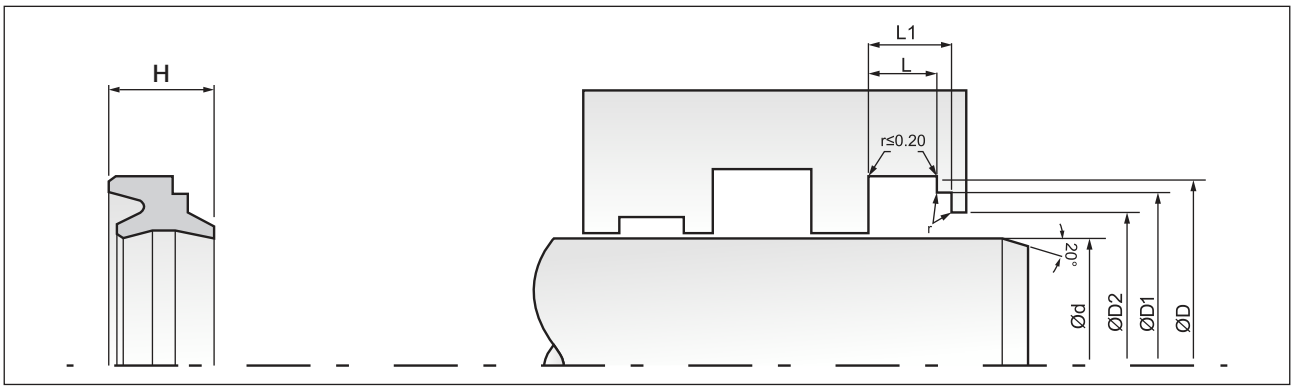

Part No.	d (f8)	D (H9)	L1 (+0.2)	L (+0.2)	D2 (H9)	D1 (H9)	H	Material	Mould No.
W120261101	26.00	34.00	6.00	4.00	29.50	32.00	8.00	NBR	WPS-980
W120281102	28.00	36.00	5.70	3.80	31.50	34.00	7.70	NBR	WPS-7063
W120286702	28.00	36.00	5.00	4.00	31.50	34.00	7.00	FKM	WPS-6956
W120286701	28.00	36.00	6.00	4.00	31.50	34.00	8.00	FKM	WPS-1504
W12028L501	28.00	36.00	6.00	4.00	31.50	34.00	8.00	PU	WPH-862
W120281101	**28.00**	**36.00**	**6.00**	**4.00**	**31.50**	**34.00**	**8.00**	**NBR**	**WPS-836**
W12030L502	30.00	35.50	4.80	3.80	33.50	33.50	6.00	PU	WPH-1945
W120301103	30.00	35.50	4.80	3.80	33.50	33.50	6.00	NBR	WPS-5652
W120301104	30.00	38.00	5.50	3.80	33.50	36.00	7.50	NBR	WPS-5738
W120306701	30.00	38.00	6.00	4.00	33.50	36.00	8.00	FKM	WPS-2417
W120301101	**30.00**	**38.00**	**6.00**	**4.00**	**33.50**	**36.00**	**8.00**	**NBR**	**WPS-1002**
W12030L501	30.00	38.00	6.00	4.00	33.50	36.00	8.00	PU	WPH-444
W120301101	30.00	38.00	6.00	4.00	33.50	36.00	8.00	NBR	WPS-5681
W120301102	30.00	42.00	6.00	4.00	33.50	40.00	8.00	NBR	WPS-4987
W120321101	32.00	40.00	6.00	4.00	35.50	38.00	8.00	NBR	WPS-5297
W12032L501	32.00	40.00	6.00	4.00	35.50	38.00	8.00	PU	WPH-1851
W120326701	32.00	40.00	6.00	4.00	35.50	38.00	8.00	FKM	WPS-3227
W120321101	32.00	40.00	6.00	4.00	35.50	38.00	8.00	NBR	WPS-5639
W120321101	**32.00**	**40.00**	**6.00**	**4.00**	**35.50**	**38.00**	**8.00**	**NBR**	**WPS-729**
W120351106	35.00	43.00	5.70	3.80	38.50	41.00	7.70	NBR	WPS-7064
W12035L501	35.00	43.00	6.00	4.00	38.50	41.00	8.00	PU	WPH-2795
W120356701	35.00	43.00	6.00	4.00	38.50	41.00	8.00	FKM	WPS-842
W120356702	35.00	43.00	6.00	4.00	38.50	41.00	8.00	FKM	WPS-3104
W12035D601	35.00	43.00	6.00	4.00	38.50	41.00	8.00	HNBR	WPS-2683
W120351101	**35.00**	**43.00**	**6.00**	**4.00**	**38.50**	**41.00**	**8.00**	**NBR**	**WPS-596**
W120351101	35.00	43.00	6.00	4.00	38.50	41.00	8.00	NBR	WPS-5711
W120351105	35.00	44.00	6.00	4.00	38.50	42.00	8.00	NBR	WPS-5100
W120351103	35.00	45.00	6.00	5.00	38.50	43.00	7.00	NBR	WPS-3589
W120366702	36.00	43.00	6.00	4.00	39.50	41.00	8.00	FKM	WPS-5543
W12036L502	36.00	44.00	6.00	4.00	39.50	42.00	8.00	PU	WPH-1852
W120366701	36.00	44.00	6.00	4.00	39.50	42.00	8.00	FKM	WPS-2170
W120361101	**36.00**	**44.00**	**6.00**	**4.00**	**39.50**	**42.00**	**8.00**	**NBR**	**WPS-3083**
W12036L501	36.00	44.00	6.00	4.00	39.50	42.00	8.00	PU	WPH-436
W120361102	36.00	45.00	6.00	4.00	39.50	43.00	8.00	NBR	WPS-6855
W120371101	37.00	45.00	6.00	4.00	40.50	43.00	8.00	NBR	WPS-7206
W120381101	**38.00**	**46.00**	**6.00**	**4.00**	**41.50**	**44.00**	**8.00**	**NBR**	**WPS-982**
W12038L501	38.00	46.00	6.00	4.00	41.50	44.00	8.00	PU	WPH-185
W120381101	38.00	46.00	6.00	4.00	41.50	44.00	8.00	NBR	WPS-5680
W120381102	38.00	48.00	6.00	4.00	41.50	46.00	8.00	NBR	WPS-6140
W120401104	40.00	48.00	4.00	3.00	43.50	46.00	5.00	NBR	WPS-6110
W120401103	40.00	48.00	6.00	4.00	43.50	46.00	7.70	NBR	WPS-4610
W12040L502	40.00	48.00	6.00	4.00	43.50	46.00	8.00	PU	WPH-1720
W120401102	40.00	48.00	6.00	4.00	43.50	46.00	8.00	NBR	WPS-3488
W120401101	40.00	48.00	6.00	4.00	43.50	46.00	8.00	NBR	WPS-5008
W120401101	40.00	48.00	6.00	4.00	43.50	46.00	8.00	NBR	WPS-5691
W120401101	**40.00**	**48.00**	**6.00**	**4.00**	**43.50**	**46.00**	**8.00**	**NBR**	**WPS-998**
W12040L503	40.00	50.00	4.00	3.00	43.50	48.00	5.00	PU	WPH-2690
W120421101	**42.00**	**50.00**	**6.00**	**4.00**	**45.50**	**48.00**	**8.00**	**NBR**	**WPS-983**
W120431101	43.00	51.00	6.00	4.00	46.50	49.00	8.00	NBR	WPS-3422
W120446701	44.00	52.00	6.00	4.00	47.50	50.00	8.00	FKM	WPS-5183
W12045L501	45.00	53.00	6.00	4.00	48.50	51.00	8.00	PU	WPH-1424
W12045L501	45.00	53.00	6.00	4.00	48.50	51.00	8.00	PU	WPH-1542

NOTE: Step shown in groove design drawing to retain wiper may or may not be required. In case step is not designed, then groove width shall be 'L1' as shown in the tables.

Bold sizes are readily available in stock.
Other materials are available on request.

W12

Medium Duty Wiper Seal

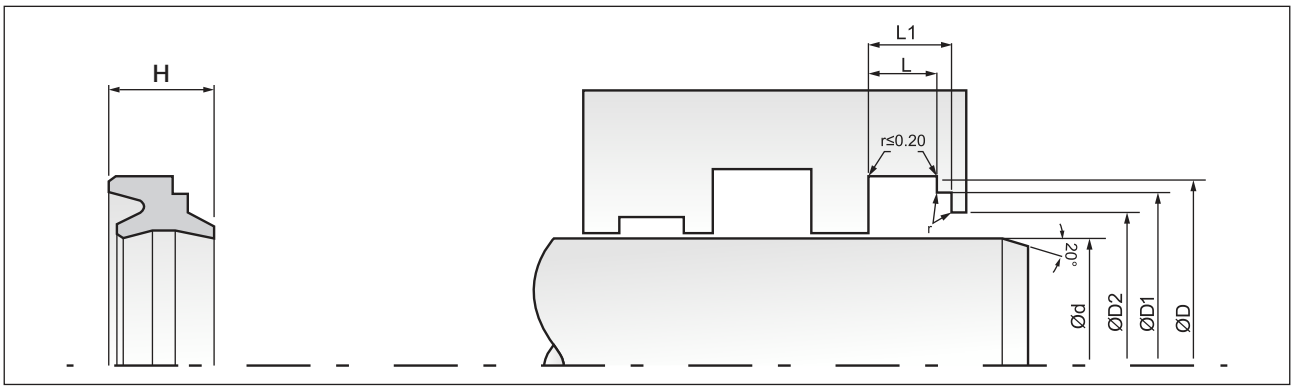

Part No.	d (f8)	D (H9)	L1 (+0.2)	L (+0.2)	D2 (H9)	D1 (H9)	H	Material	Mould No.
W120456712	45.00	53.00	6.00	4.00	48.50	51.00	8.00	FKM	WPS-4171
W120451105	45.00	53.00	6.00	4.00	48.50	51.00	8.00	NBR	WPS-6532
W120456701	45.00	53.00	5.00	4.00	48.50	51.00	6.00	FKM	WPS-843
W120451101	**45.00**	**53.00**	**6.00**	**4.00**	**48.50**	**51.00**	**8.00**	**NBR**	**WPS-5701**
W120451102	45.00	60.00	6.00	4.00	48.50	58.00	8.80	NBR	WPS-4984
W120501104	50.00	58.00	4.00	3.00	53.50	56.00	5.00	NBR	WPS-6111
W120501101	50.00	58.00	6.00	4.00	53.50	56.00	8.00	NBR	WPS-5007
W12050L504	50.00	58.00	6.00	4.00	53.50	56.00	8.00	PU	WPH-2119
W120506701	50.00	58.00	6.00	4.00	53.50	56.00	8.00	FKM	WPS-2896
W120501102	50.00	58.00	6.00	5.00	53.50	56.00	7.00	NBR	WPS-3741
W120501103	50.00	58.00	6.00	4.00	53.50	56.00	8.00	NBR	WPS-3788
W120501101	**50.00**	**58.00**	**6.00**	**4.00**	**53.50**	**56.00**	**8.00**	**NBR**	**WPS-644**
W12050L501	50.00	58.00	6.00	4.00	53.50	56.00	8.00	PU	WPH-435
W12055L501	55.00	63.00	6.00	4.00	58.50	61.00	8.00	PU	WPH-1645
W120551101	55.00	63.00	6.00	4.00	58.50	61.00	8.00	NBR	WPS-5705
W120551101	**55.00**	**63.00**	**6.00**	**4.00**	**58.50**	**61.00**	**8.00**	**NBR**	**WPS-1204**
W120566701	56.00	64.00	6.00	4.00	59.50	62.00	8.00	FKM	WPS-1541
W120561101	56.00	64.00	6.00	4.00	59.50	62.00	8.00	NBR	WPS-5682
W120565901	56.00	64.00	6.00	4.00	59.50	62.00	8.00	PU	WPH-1595
W120561101	**56.00**	**64.00**	**6.00**	**4.00**	**59.50**	**62.00**	**8.00**	**NBR**	**WPS-3750**
W120561102	56.00	66.00	6.00	4.00	59.50	64.00	8.00	NBR	WPS-6153
W120581101	58.00	66.00	6.00	4.00	61.50	64.00	8.00	NBR	WPS-3164
W120606701	60.00	68.00	6.00	4.00	63.50	66.00	8.00	FKM	WPS-4911
W120601101	60.00	68.00	6.00	4.00	63.50	66.00	8.00	NBR	WPS-5683
W120601101	**60.00**	**68.00**	**6.00**	**4.00**	**63.50**	**66.00**	**8.00**	**NBR**	**WPS-1008**
W120636702	63.00	71.00	6.00	4.00	66.50	69.00	8.00	FKM	WPS-4849
W120631101	**63.00**	**71.00**	**6.00**	**4.00**	**66.50**	**69.00**	**8.00**	**NBR**	**WPS-1054**
W120651101	**65.00**	**73.00**	**6.00**	**4.00**	**68.50**	**71.00**	**8.00**	**NBR**	**WPS-1104**
W120651101	65.00	73.00	6.00	4.00	68.50	71.00	8.00	NBR	WPS-5690
W120681101	68.00	76.00	6.00	4.00	71.50	74.00	8.00	NBR	WPS-5641
W120691101	69.50	78.00	6.00	4.00	73.00	76.00	8.00	NBR	WPS-3963
W12070L502	70.00	78.00	6.00	4.00	73.50	76.00	8.00	PU	WPH-1158
W120706701	70.00	78.00	6.00	4.00	73.50	76.00	8.00	FKM	WPS-1507
W120701101	70.00	78.00	6.00	4.00	73.50	76.00	8.00	NBR	WPS-5700
W120701101	**70.00**	**78.00**	**6.00**	**4.00**	**73.50**	**76.00**	**8.00**	**NBR**	**WPS-1703**
W120706702	70.00	80.00	6.00	4.00	73.50	78.00	8.00	FKM	WPS-6114
W120701102	70.00	80.00	6.00	4.00	73.50	78.00	8.00	NBR	WPS-850
W120701104	70.00	83.00	7.00	5.00	73.50	81.00	10.80	NBR	WPS-4986
W12075L501	75.00	83.00	6.00	4.00	78.50	81.00	8.00	PU	WPH-2282
W120751101	75.00	83.00	6.00	4.00	78.50	81.00	8.00	NBR	WPS-5679
W120751101	**75.00**	**83.00**	**6.00**	**4.00**	**78.50**	**81.00**	**8.00**	**NBR**	**WPS-1103**
W120766701	76.20	84.93	6.00	4.00	79.70	82.93	8.00	FKM	WPS-5035
W120771101	77.00	85.00	6.00	3.90	80.50	83.00	8.00	NBR	WPS-3333
W120801104	80.00	88.00	6.00	4.00	83.50	86.00	7.70	NBR	WPS-4611
W120801103	80.00	88.00	6.00	4.00	83.50	86.00	8.00	NBR	WPS-4090
W120806701	80.00	88.00	6.00	4.00	83.50	86.00	8.00	FKM	WPS-1505
W120801101	80.00	88.00	6.00	4.00	83.50	86.00	8.00	NBR	WPS-5684
W120801101	**80.00**	**88.00**	**6.00**	**4.00**	**83.50**	**86.00**	**8.00**	**NBR**	**WPS-1102**
W12080L501	80.00	88.00	6.00	4.00	83.50	86.00	8.00	PU	WPH-209
W120851101	**85.00**	**93.00**	**6.00**	**4.00**	**88.50**	**91.00**	**8.00**	**NBR**	**WPS-1101**
W120851102	85.00	93.00	6.00	4.00	88.50	91.00	8.00	NBR	WPS-3790
W120901104	90.00	98.00	5.50	3.60	93.50	96.00	8.00	NBR	WPS-3542

NOTE: Step shown in groove design drawing to retain wiper may or may not be required. In case step is not designed, then groove width shall be 'L1' as shown in the tables.

Bold sizes are readily available in stock.

Other materials are available on request.

W12

Medium Duty Wiper Seal

MAX SPARE LIMITED
QUALITY. PRECISION. SPEED.

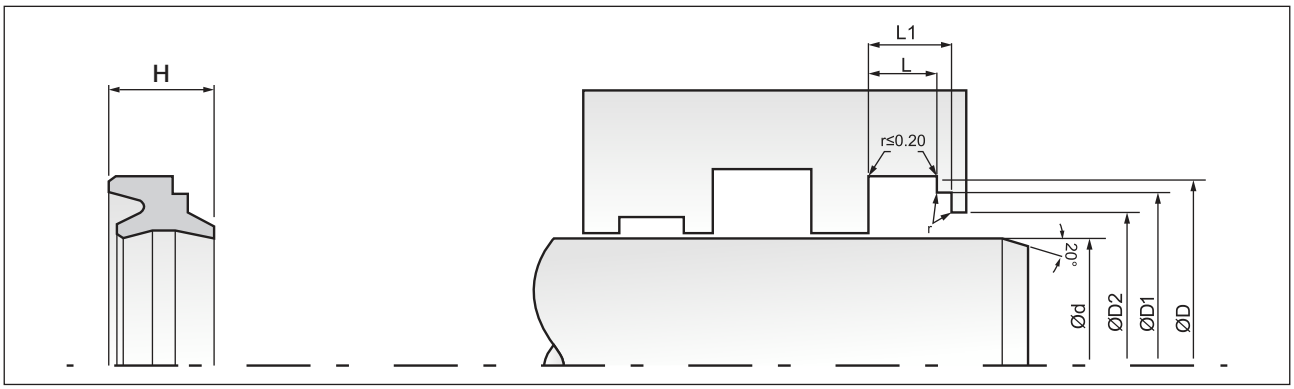

Part No.	d (f8)	D (H9)	L1 (+0.2)	L (+0.2)	D2 (H9)	D1 (H9)	H	Material	Mould No.
W120906701	90.00	98.00	6.00	4.00	93.50	96.00	8.00	FKM	WPS-1508
W120901103	90.00	98.00	6.00	4.00	93.50	96.00	8.00	NBR	WPS-3472
W120901102	90.00	98.00	6.00	4.00	93.50	96.00	8.00	NBR	WPS-2103
W120905901	90.00	98.00	6.00	4.00	93.50	96.00	8.00	PU	WPH-1593
W120903401	90.00	98.00	6.00	4.00	93.50	96.00	8.00	EPDM	WPS-5575
W120901101	**90.00**	**98.00**	**6.00**	**4.00**	**93.50**	**96.00**	**8.00**	**NBR**	**WPS-995**
W120906704	90.00	98.00	6.00	4.00	93.50	96.00	8.00	FKM	WPS-6124
W120906702	90.00	100.00	6.00	4.00	93.50	98.00	8.00	FKM	WPS-3421
W120906703	90.00	102.00	6.00	4.00	93.50	100.00	8.00	FKM	WPS-3650
W120951101	95.00	103.00	6.00	4.00	98.50	101.00	8.00	NBR	WPS-5699
W120951101	95.00	103.00	6.00	4.00	98.50	101.00	8.00	NBR	WPS-5685
W120951101	**95.00**	**103.00**	**6.00**	**4.00**	**98.50**	**101.00**	**8.00**	**NBR**	**WPS-3109**
W12100L501	100.00	108.00	6.00	4.00	103.50	106.00	8.00	PU	WPH-598
W121006701	100.00	108.00	6.00	4.00	103.50	106.00	8.00	FKM	WPS-1510
W121001101	100.00	108.00	6.00	4.00	103.50	106.00	8.00	NBR	WPS-5689
W121001101	**100.00**	**108.00**	**6.00**	**4.00**	**103.50**	**106.00**	**8.00**	**NBR**	**WPS-1100**
W121001102	100.00	110.00	6.00	4.00	103.50	108.00	8.00	NBR	WPS-4927
W121056701	105.00	117.00	8.20	5.50	110.00	114.00	11.00	FKM	WPS-6673
W121051101	**105.00**	**117.00**	**8.20**	**5.50**	**110.00**	**114.00**	**11.00**	**NBR**	**WPS-2175**
W121106702	110.00	122.00	6.00	5.50	115.00	119.00	5.00	FKM	WPS-2879
W121101105	110.00	122.00	8.20	5.50	115.00	119.00	11.00	NBR	WPS-1556
W121106704	110.00	122.00	8.50	5.50	115.00	119.00	11.00	FKM	WPS-5993
W121105901	110.00	122.00	8.00	5.50	115.00	119.00	11.00	PU	WPH-1594
W121106705	110.00	122.00	8.00	6.00	115.00	119.00	12.00	FKM	WPS-7023
W121101101	110.00	122.00	8.20	5.50	115.00	119.00	11.00	NBR	WPS-5693
W121101101	**110.00**	**122.00**	**8.20**	**5.50**	**115.00**	**119.00**	**11.00**	**NBR**	**WPS-1068**
W121151101	**115.00**	**127.00**	**8.20**	**5.50**	**120.00**	**124.00**	**11.00**	**NBR**	**WPS-1887**
W12120P401	120.00	128.00	6.00	4.00	125.00	125.00	7.00	NBR	WPS-3937
W121201101	120.00	132.00	8.20	5.50	125.00	129.00	11.00	NBR	WPS-3296
W121206702	120.00	132.00	6.00	5.00	125.00	129.00	7.00	FKM	WPS-3936
W121201101	**120.00**	**132.00**	**8.20**	**5.50**	**125.00**	**129.00**	**11.00**	**NBR**	**WPS-1095**
W121201101	120.00	132.00	8.20	5.50	125.00	129.00	11.00	NBR	WPS-5709
W121251102	125.00	137.00	8.20	5.50	130.00	134.00	11.00	NBR	WPS-3791
W121251101	**125.00**	**137.00**	**8.20**	**5.50**	**130.00**	**134.00**	**11.00**	**NBR**	**WPS-1012**
W12125L501	125.00	137.00	8.20	5.50	130.00	134.00	11.00	PU	WPH-2083
W121301101	130.00	142.00	8.20	5.50	135.00	139.00	11.00	NBR	WPS-5710
W121301101	**130.00**	**142.00**	**8.20**	**5.50**	**135.00**	**139.00**	**11.00**	**NBR**	**WPS-1099**
W121351101	**135.00**	**147.00**	**8.20**	**5.50**	**140.00**	**144.00**	**11.00**	**NBR**	**WPS-2173**
W121401102	140.00	150.00	6.00	5.00	145.00	147.00	7.00	NBR	WPS-2281
W121406702	140.00	152.00	8.20	5.50	145.00	149.00	11.00	FKM	WPS-6580
W121401103	140.00	152.00	7.70	5.00	145.00	149.00	11.00	NBR	WPS-5239
W121406701	140.00	152.00	8.20	5.50	145.00	149.00	11.00	FKM	WPS-2203
W121401101	**140.00**	**152.00**	**8.20**	**5.50**	**145.00**	**149.00**	**11.00**	**NBR**	**WPS-1098**
W121406703	140.00	153.00	8.00	5.00	145.00	150.00	11.00	FKM	WPS-7178
W121451101	145.00	157.00	8.20	5.50	150.00	154.00	11.00	NBR	WPS-5642
W121501102	150.00	160.00	8.20	5.50	155.00	157.00	11.00	NBR	WPS-6765
W12150L501	150.00	162.00	8.20	5.50	155.00	159.00	11.00	PU	WPH-2216
W121501101	**150.00**	**162.00**	**8.20**	**5.50**	**155.00**	**159.00**	**11.00**	**NBR**	**WPS-858**
W121506701	150.00	162.00	8.20	5.50	155.00	159.00	11.00	FKM	WPS-3747
W121551101	155.00	167.00	8.20	5.50	160.00	164.00	11.00	NBR	WPS-5678
W121556701	155.00	167.00	8.20	5.50	160.00	164.00	11.00	FKM	WPS-6766
W121606701	160.00	172.00	8.20	5.50	165.00	169.00	11.00	FKM	WPS-2861

NOTE: Step shown in groove design drawing to retain wiper may or may not be required. In case step is not designed, then groove width shall be 'L1' as shown in the tables.

Bold sizes are readily available in stock.
Other materials are available on request.

W12

Medium Duty Wiper Seal

MAX SPARE LIMITED
QUALITY. PRECISION. SPEED.

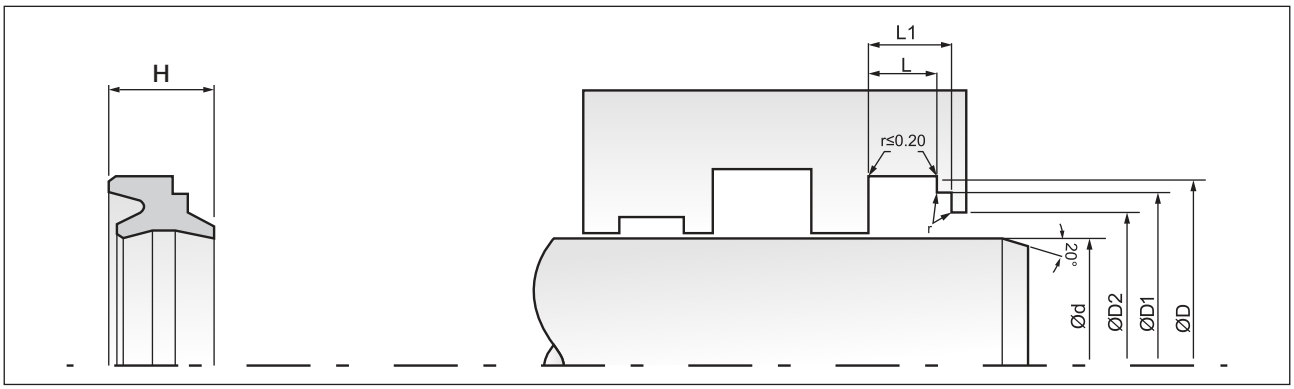

Part No.	d (f8)	D (H9)	L1 (+0.2)	L (+0.2)	D2 (H9)	D1 (H9)	H	Material	Mould No.
W121601101	**160.00**	**172.00**	**8.20**	**5.50**	**165.00**	**169.00**	**11.00**	**NBR**	**WPS-1097**
W121701101	**170.00**	**182.00**	**8.20**	**5.50**	**175.00**	**179.00**	**11.00**	**NBR**	**WPS-1096**
W121781101	178.00	192.00	8.20	5.50	183.00	189.00	11.00	NBR	WPS-4943
W121801101	180.00	192.00	8.20	5.50	185.00	189.00	11.00	NBR	WPS-5675
W121801101	**180.00**	**192.00**	**8.20**	**5.50**	**185.00**	**189.00**	**11.00**	**NBR**	**WPS-1555**
W121806702	180.00	192.00	8.00	5.50	185.00	189.00	11.50	FKM	WPS-5167
W121901101	**190.00**	**202.00**	**8.20**	**5.50**	**195.00**	**199.00**	**11.00**	**NBR**	**WPS-3606**
W122001101	**200.00**	**212.00**	**8.20**	**5.50**	**205.00**	**209.00**	**11.00**	**NBR**	**WPS-1552**
W122001102	200.00	212.00	8.20	5.50	205.00	209.00	11.00	NBR	WPS-6753
W122006701	200.00	212.00	8.20	5.50	205.00	209.00	11.00	FKM	WPS-5364
W12200L501	200.00	220.00	8.60	6.00	205.00	217.00	11.00	PU	WPH-1754
W122158701	215.00	230.00	8.60	6.00	220.00	227.00	11.00	PU	WPH-1622
W122206701	220.00	235.00	9.50	6.70	227.00	232.60	13.00	FKM	WPS-6370
W122201101	**220.00**	**235.00**	**9.50**	**6.70**	**227.00**	**232.60**	**13.00**	**NBR**	**WPS-3607**
W122251101	225.00	240.00	12.50	9.50	232.00	237.60	13.00	NBR	WPS-4094
W12240L501	240.00	260.00	9.50	6.50	247.00	257.60	13.00	PU	WPH-2280
W122506701	250.00	265.00	8.00	6.50	257.00	262.60	12.00	FKM	WPS-5573
W122801101	280.00	295.00	9.50	6.50	287.00	292.60	13.00	NBR	WPS-4741
W123208701	320.00	335.00	9.00	6.50	327.00	332.60	13.00	PU	WPH-1392
W12330L501	330.00	345.00	9.50	6.50	337.00	342.60	13.50	PU	WPH-844
W123801102	380.00	395.00	9.50	6.50	387.00	392.60	13.00	NBR	WPS-6321
W123801101	380.00	395.00	9.50	6.70	387.00	392.60	13.00	NBR	WPS-6035
W124001101	400.00	415.00	9.50	6.50	407.00	412.60	13.00	NBR	WPS-4740
W124201101	420.00	435.00	9.50	6.50	427.00	432.60	13.00	NBR	WPS-6842
W1205201101	520.00	535.00	9.50	6.70	527.00	532.60	13.00	NBR	WPS-3373
W125601101	560.00	575.00	9.50	6.50	567.00	572.60	13.00	NBR	WPS-3875
W125901101	590.00	605.00	9.50	6.50	597.00	602.60	13.00	NBR	WPS-7254
W126001101	600.00	615.00	9.50	6.50	607.00	612.60	13.00	NBR	WPS-6907
W128506701	850.00	865.00	9.50	6.50	857.00	862.60	13.00	FKM	WPS-2492
W128701101	870.00	885.00	9.50	6.50	877.00	882.60	13.00	NBR	WPS-4238

NOTE: Step shown in groove design drawing to retain wiper may or may not be required. In case step is not designed, then groove width shall be 'L1' as shown in the tables.

Bold sizes are readily available in stock.

Other materials are available on request.

W10

Medium Duty Wiper Seal

DETAILS

W10 wiper has a lip designed to remove dirt, mud, dust, moisture etc. accumulating on the rod. The wiper is manufactured from a high hardness NBR compound suitable for installing in a simple groove design. The lip of this wiper does not project beyond the cylinder cover to protect it from damage. Due to excellent wear resistance of polyurethane the life expected is 3 times than that of NBR. This wiper is also available in FKM (viton) material for high temperature application.

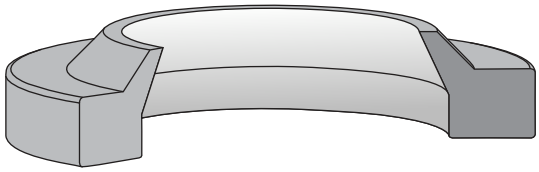

COMPATIBILITY

Mineral oils, bio oils, water soluble & water glycol fluids.

MATERIAL

Polyurethane 92 Shore A
Nitrile Rubber 85/90 Shore A

APPLICATION

- Medium duty.
- Hydraulic and Pneumatic cylinders.

OPERATING CONDITIONS

Temperature Range	:	-30°C to + 100°C
Speed	:	PU - 1.0 m/s
		NBR - 0.5 m/s

FEATURES

- General purpose seal.
- Good wiping performance.
- Simple groove design.
- Long service life.
- No twisting in the groove.
- Seal retainer not required.

SURFACE ROUGHNESS

Static	:	1.6 µmRa
Dynamic	:	0.4 µmRa

INSTALLATION & ASSEMBLY

W10 wiper seal can be easily fitted into the closed grooves by deforming it into kidney shape. The assembly tool must have no sharp edges. The seal must lubricate before installation.

W10

Medium Duty Wiper Seal

MAX SPARE LIMITED
QUALITY. PRECISION. SPEED.

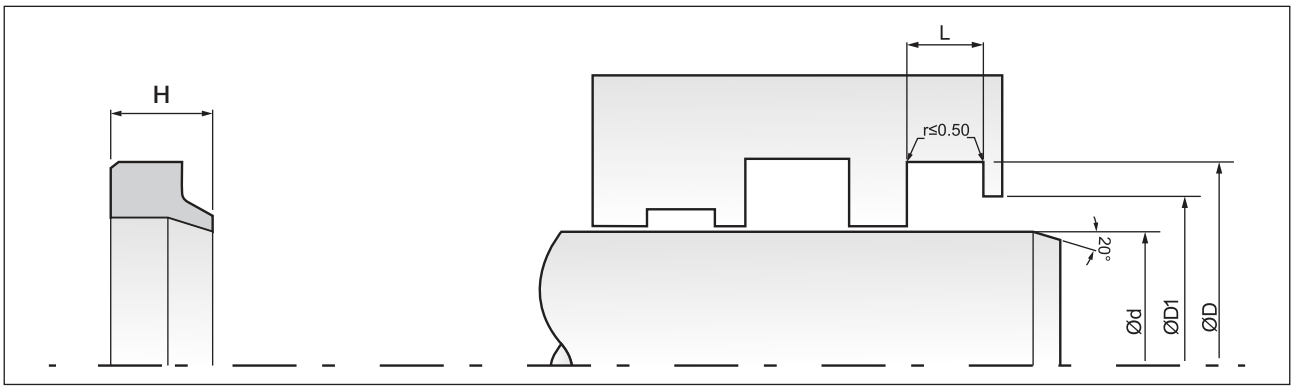

Part No.	d (f8)	D (H9)	L (+0.2)	H	D1 (H9)	Matl.	Mould No.
W10005L501	5.00	8.00	2.20	4.00	6.35	PU	WPH-887
W100061107	6.00	9.00	2.00	2.75	7.35	NBR	WPS-5028
W100061103	6.00	13.50	4.00	7.00	9.38	NBR	WPS-3156
W100061105	6.22	12.93	3.02	4.88	9.24	NBR	WPS-3986
W100068701	6.35	9.52	1.40	2.45	7.78	PU	WPH-1536
W100066702	6.35	11.35	2.28	3.50	8.60	FKM	WPS-4646
W10006L501	6.35	11.70	2.80	4.20	8.76	PU	WPH-1774
W100071105	7.00	10.00	2.00	2.75	8.35	NBR	WPS-5012
W100071103	7.60	16.00	6.00	8.00	11.38	NBR	WPS-3157
W100076702	7.95	12.62	2.28	3.50	10.05	FKM	WPS-4649
W10008L501	8.00	11.00	2.00	4.00	9.35	PU	WPH-1635
W100081102	8.00	12.00	4.00	5.00	9.80	NBR	WPS-2897
W100081106	8.00	13.00	3.50	5.00	10.25	NBR	WPS-4941
W100081105	8.00	14.00	3.50	5.00	10.70	NBR	WPS-4157
W100081103	8.00	14.00	3.00	6.00	10.70	NBR	WPS-3314
W10009L501	9.52	15.87	3.17	4.76	12.38	PU	WPH-750
W10009Q201	9.70	15.50	2.00	3.50	12.31	PU	WPH-1251
W100090801	9.70	15.50	2.00	3.50	12.31	NBR	WPS-3580
W100106601	10.00	14.00	2.00	3.00	11.80	FKM	WPS-3034
W100101106	10.00	14.00	2.00	3.00	11.80	NBR	WPS-3141
W100101111	10.00	14.00	3.50	5.00	11.80	NBR	WPS-4158
W10010L504	10.00	14.50	1.50	3.00	12.03	PU	WPH-1667
W100106703	10.00	15.00	2.00	3.00	12.25	FKM	WPS-4596
W100101116	10.00	15.00	3.50	5.00	12.25	NBR	WPS-5525
W100101114	10.00	15.50	2.00	3.50	12.48	NBR	WPS-4738
W10010Q201	10.00	16.00	2.50	4.00	12.70	PU	WPH-1107
W100101109	10.00	16.00	2.00	5.00	12.70	NBR	WPS-3132
W100106704	10.00	16.00	3.00	4.50	12.70	FKM	WPS-4990
W100101110	10.00	16.00	4.00	7.00	12.70	NBR	WPS-3765
W100101112	10.00	16.50	3.00	5.00	12.93	NBR	WPS-4173
W100101107	10.00	18.00	3.00	5.00	13.60	NBR	WPS-2412
W100101115	10.00	18.00	4.00	7.00	13.60	NBR	WPS-5036
W10010L503	10.00	18.00	5.00	7.00	13.60	PU	WPH-289
W10010L502	10.00	19.00	3.00	5.00	14.05	PU	WPH-922
W100101108	10.00	20.00	3.00	5.00	14.50	NBR	WPS-2502
W10010L501	10.00	20.00	5.00	8.00	14.50	PU	WPH-828
W100111102	11.00	19.00	4.00	7.00	14.60	NBR	WPS-2250
W100116703	11.00	25.00	5.00	7.00	17.30	FKM	WPS-4774
W100111104	11.12	15.60	2.28	3.50	13.14	NBR	WPS-4648
W10011Q201	11.70	17.00	2.50	4.00	14.09	PU	WPH-1095
W100121120	12.00	16.00	2.90	3.90	13.80	NBR	WPS-4980
W100121119	12.00	16.00	3.00	5.00	13.80	NBR	WPS-4973
W100126704	12.00	17.00	3.20	5.00	14.25	FKM	WPS-4225
W10012L502	12.00	17.00	3.00	5.00	14.25	PU	WPH-747
W100121106	**12.00**	**17.00**	**3.00**	**5.00**	**14.25**	**NBR**	**WPS-267**
W100120802	12.00	17.00	4.40	6.30	14.25	NBR	WPS-4964
W100121117	12.00	17.00	4.00	7.00	14.25	NBR	WPS-4121
W100120801	12.00	17.50	2.00	3.50	14.48	NBR	WPS-3779
W10012Q201	12.00	18.00	2.60	4.00	14.70	PU	WPH-1045
W100121116	12.00	18.00	2.80	4.00	14.70	NBR	WPS-4057
W10012L504	12.00	18.00	3.20	6.00	14.70	PU	WPH-1287
W100121104	12.00	18.00	3.00	6.00	14.70	NBR	WPS-182

Part No.	d (f8)	D (H9)	L (+0.2)	H	D1 (H9)	Matl.	Mould No.
W10012L506	12.00	18.00	5.00	7.00	14.70	PU	WPH-1672
W10012L503	12.00	18.00	5.00	8.00	14.70	PU	WPH-829
W10012O301	12.00	18.60	3.50	5.00	14.97	NBR	WPS-3966
W100121121	12.00	18.60	3.80	5.00	14.97	NBR	WPS-5079
W100121114	12.00	19.00	4.20	6.00	15.15	NBR	WPS-3500
W100121112	12.00	19.00	5.00	7.00	15.15	NBR	WPS-2657
W10012L401	12.00	19.60	5.00	7.00	15.42	PU	WPH-849
W10012L505	12.00	20.00	4.50	6.00	15.60	PU	WPH-1556
W100121123	12.00	20.00	4.00	6.00	15.60	NBR	WPS-5556
W100121115	12.00	20.00	5.00	7.00	15.60	NBR	WPS-3554
W100121110	12.00	22.00	5.00	7.00	16.50	NBR	WPS-2452
W100121109	12.00	22.00	5.00	8.00	16.50	NBR	WPS-2451
W100121111	12.70	18.00	5.00	7.00	15.09	NBR	WPS-2453
W100128701	12.70	19.05	3.00	4.60	15.56	PU	WPH-671
W10012L501	12.70	19.10	3.00	5.30	15.58	PU	WPH-736
W100121118	12.70	19.10	3.00	6.50	15.58	NBR	WPS-4811
W100121113	12.70	20.50	6.00	8.00	16.21	NBR	WPS-3454
W100131101	13.00	20.00	5.00	7.00	16.15	NBR	WPS-2542
W10014Q202	14.00	18.00	2.50	3.50	15.80	PU	WPH-1143
W100145904	14.00	18.00	2.50	4.50	15.80	PU	WPH-1492
W10014L502	14.00	18.00	2.00	3.30	15.80	PU	WPH-1950
W100146701	14.00	18.00	3.20	4.00	15.80	FKM	WPS-4299
W100141109	14.00	18.00	3.20	4.00	15.80	NBR	WPS-5348
W100145906	14.00	19.00	3.00	5.00	16.25	PU	WPH-1891
W100141108	14.00	19.50	4.00	6.00	16.48	NBR	WPS-5248
W100146704	14.00	20.00	3.50	5.00	16.70	FKM	WPS-3087
W10014L503	14.00	20.00	3.50	5.00	16.70	PU	WPH-1966
W10014Q201	14.00	20.00	3.00	4.00	16.70	PU	WPH-1070
W100141102	14.00	20.60	3.50	5.00	16.97	NBR	WPS-2132
W100141106	14.00	21.00	3.60	5.00	17.15	NBR	WPS-4852
W100145905	14.00	22.00	4.80	7.00	17.60	PU	WPH-1822
W10014L501	14.00	22.00	5.00	7.00	17.60	PU	WPH-842
W100141105	14.00	24.00	5.00	7.00	18.50	NBR	WPS-3084
W100141002	14.00	25.00	5.00	7.00	18.95	NBR	WPS-3577
W100146703	14.22	20.90	2.50	4.00	17.23	FKM	WPS-2550
W100146705	14.27	20.95	2.54	4.82	17.28	FKM	WPS-3295
W100141107	14.60	19.00	2.50	4.00	16.58	NBR	WPS-4901
W10014Q203	14.70	19.00	2.50	4.00	16.64	PU	WPH-1402
W10015Q201	15.00	19.00	2.50	4.00	16.80	PU	WPH-1743
W100156706	15.00	20.00	2.20	4.00	17.25	FKM	WPS-4937
W100156707	15.00	21.00	2.20	4.00	17.70	FKM	WPS-4952
W100151104	15.00	21.60	3.50	5.00	17.97	NBR	WPS-2131
W100156705	15.00	22.00	3.20	4.50	18.15	FKM	WPS-4938
W100151107	15.00	23.00	4.00	6.00	18.60	NBR	WPS-4993
W100156704	15.00	24.00	4.00	6.00	19.05	FKM	WPS-4775
W100151106	15.75	22.05	2.50	4.51	18.59	NBR	WPS-4681
W100151105	15.87	20.87	2.28	3.50	18.12	NBR	WPS-4647
W10015L502	15.87	22.14	3.14	5.33	18.69	PU	WPH-1665
W100150901	15.87	22.22	2.50	4.50	18.73	NBR	WPS-4663
W10015L401	15.87	22.47	2.71	4.75	18.84	PU	WPH-1265
W10015L501	15.87	23.81	4.80	6.25	19.44	PU	WPH-935
W100156702	15.87	25.40	4.76	6.35	20.16	FKM	WPS-2391

Bold sizes are readily available in stock.
Other materials are available on request.

W10

Medium Duty Wiper Seal

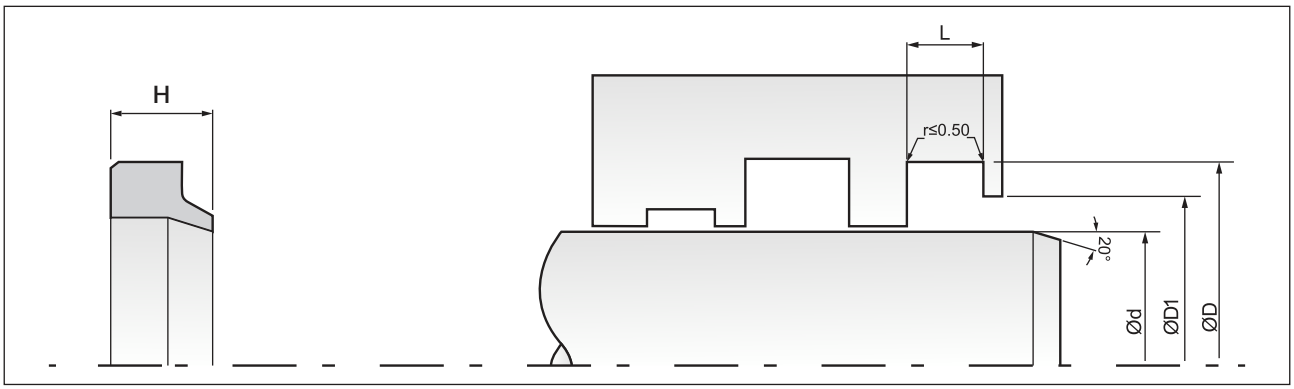

Part No.	d (f8)	D (H9)	L (+0.2)	H	D1 (H9)	Matl.	Mould No.
W10016Q202	16.00	20.00	2.50	4.00	17.80	PU	WPH-1347
W100161114	16.00	20.00	2.60	3.90	17.80	NBR	WPS-3574
W100161121	16.00	20.00	2.90	3.90	17.80	NBR	WPS-4982
W100161117	16.00	20.00	3.00	4.20	17.80	NBR	WPS-3724
W100161120	16.00	21.00	1.50	4.00	18.25	NBR	WPS-4879
W100165905	16.00	21.50	2.40	5.00	18.48	PU	WPH-667
W100166710	16.00	22.00	2.20	3.50	18.70	FKM	WPS-4743
W100166708	16.00	22.00	2.20	5.00	18.70	FKM	WPS-4597
W100166705	16.00	22.00	2.00	8.00	18.70	FKM	WPS-2681
W10016L501	16.00	22.00	3.20	5.00	18.70	PU	WPH-753
W100161115	16.00	22.00	3.40	5.00	18.70	NBR	WPS-3612
W10016Q201	16.00	22.00	3.00	4.00	18.70	PU	WPH-1049
W100161112	16.00	22.00	3.00	6.00	18.70	NBR	WPS-3315
W100161116	16.00	22.00	4.00	6.00	18.70	NBR	WPS-3699
W100161118	16.00	22.00	5.00	6.00	18.70	NBR	WPS-4390
W100161102	16.00	22.00	5.00	7.00	18.70	NBR	WPS-4333
W10016L401	16.00	22.40	2.50	4.50	18.88	PU	WPH-1317
W10016L503	16.00	22.50	3.50	6.30	18.93	PU	WPH-945
W10016L506	16.00	22.50	3.00	5.00	18.93	PU	WPH-1346
W100161107	16.00	22.60	3.50	5.00	18.97	NBR	WPS-2130
W100166711	16.00	23.00	3.50	4.50	19.15	FKM	WPS-4936
W10016U201	16.00	23.00	6.50	8.70	19.15	FKM	WPS-5120
W100161110	16.00	24.00	2.50	5.00	19.60	NBR	WPS-2469
W100166706	16.00	24.00	3.00	7.00	19.60	FKM	WPS-3939
W100161119	16.00	24.00	4.00	7.00	19.60	NBR	WPS-4736
W100166601	16.00	24.00	5.10	7.80	19.60	FKM	WPS-2409
W100166704	16.00	24.00	5.30	8.10	19.60	FKM	WPS-2497
W10016L507	16.00	24.00	5.30	7.00	19.60	PU	WPH-1537
W100161103	**16.00**	**24.60**	**5.00**	**7.00**	**19.87**	**NBR**	**WPS-1655**
W100166707	16.00	24.60	5.00	7.00	19.87	FKM	WPS-4224
W10016L509	16.00	24.60	5.00	7.00	19.87	PU	WPH-1719
W100161109	16.00	26.00	3.00	5.00	20.50	NBR	WPS-2460
W100161123	16.00	26.00	4.50	7.50	20.50	NBR	WPS-5516
W100161122	16.00	26.00	4.00	6.00	20.50	NBR	WPS-5060
W100166703	16.00	26.00	5.50	8.00	20.50	FKM	WPS-2176
W100161111	16.00	26.00	5.00	7.00	20.50	NBR	WPS-3004
W100165907	16.00	26.00	5.00	7.00	20.50	PU	WPH-1152
W100161108	16.00	27.00	4.00	6.00	20.95	NBR	WPS-2262
W10016L502	16.00	30.00	7.00	10.00	22.30	PU	WPH-888
W10017L501	17.00	21.00	4.00	6.00	18.80	PU	WPH-663
W10017L502	17.00	22.00	4.00	5.50	19.25	PU	WPH-883
W100171104	17.00	23.00	4.00	6.00	19.70	NBR	WPS-4051
W100171103	17.00	23.60	3.80	6.00	19.97	NBR	WPS-2962
W100171102	17.46	23.81	2.38	4.37	20.32	NBR	WPS-2523
W100175902	17.46	23.81	3.17	4.76	20.32	PU	WPH-1138
W10017L503	17.50	26.00	5.00	7.00	21.33	PU	WPH-1493
W100181117	18.00	22.00	2.70	4.00	19.80	NBR	WPS-4627
W100181121	18.00	22.00	3.00	4.50	19.80	NBR	WPS-5198
W10018L505	18.00	24.00	2.40	4.60	20.70	PU	WPH-1612
W100181120	18.00	24.00	2.50	5.00	20.70	NBR	WPS-4880
W100181112	18.00	24.00	2.80	4.80	20.70	NBR	WPS-2490
W100181116	18.00	24.00	3.50	5.50	20.70	NBR	WPS-4230

Part No.	d (f8)	D (H9)	L (+0.2)	H	D1 (H9)	Matl.	Mould No.
W10018U202	18.00	24.00	3.50	5.00	20.70	FKM	WPS-5119
W100181119	18.00	24.00	3.80	5.30	20.70	NBR	WPS-4818
W10018Q201	18.00	24.00	3.00	4.00	20.70	PU	WPH-1043
W100181118	18.00	24.00	3.00	4.80	20.70	NBR	WPS-4734
W10018L501	18.00	24.00	3.00	7.00	20.70	PU	WPH-965
W100186704	18.00	24.00	4.00	5.50	20.70	FKM	WPS-2556
W100181111	18.00	24.60	2.80	4.50	20.97	NBR	WPS-2339
W100186705	18.00	24.60	3.80	5.30	20.97	FKM	WPS-2983
W100186708	18.00	24.60	4.00	5.30	20.97	FKM	WPS-4744
W10018U201	18.00	25.00	3.60	7.00	21.15	FKM	WPS-5116
W100181114	18.00	25.00	5.00	7.00	21.15	NBR	WPS-3012
W10018U203	18.00	25.00	6.50	9.00	21.15	FKM	WPS-5118
W10018L503	18.00	26.00	4.50	6.00	21.60	PU	WPH-1298
W10018L507	18.00	26.00	4.00	6.00	21.60	PU	WPH-1818
W100181106	18.00	26.00	4.00	7.00	21.60	NBR	WPS-4302
W100186703	18.00	26.00	5.00	6.00	21.60	FKM	WPS-2333
W100186707	18.00	26.00	6.00	8.00	21.60	FKM	WPS-484
W10018L504	18.00	26.60	5.30	7.00	21.87	PU	WPH-1539
W100181102	**18.00**	**26.60**	**5.00**	**7.00**	**21.87**	**NBR**	**WPS-1444**
W100181122	18.00	27.65	5.00	7.00	22.34	NBR	WPS-5326
W100181123	18.00	28.00	5.30	8.00	22.50	NBR	WPS-5518
W100181103	18.00	28.00	5.00	7.00	22.50	NBR	WPS-170
W100181001	18.00	28.00	5.00	7.00	22.50	NBR	WPS-4959
W100186706	18.00	28.00	5.00	7.00	22.50	FKM	WPS-3746
W100180901	18.00	28.00	7.00	10.00	22.50	NBR	WPS-5399
W10018L506	18.00	30.00	6.00	8.00	23.40	PU	WPH-1742
W100181113	18.00	32.00	3.20	10.00	24.30	NBR	WPS-2688
W100191109	19.00	23.50	2.30	3.20	21.03	NBR	WPS-5548
W100191104	19.00	25.00	2.50	3.00	21.70	NBR	WPS-2500
W100191105	19.00	26.00	3.00	4.00	22.15	NBR	WPS-2561
W100191106	19.00	28.00	4.50	6.00	23.05	NBR	WPS-2816
W10019V301	19.00	30.00	9.20	18.30	23.95	NBR	WPS-4072
W10019L502	19.05	25.40	2.50	4.00	21.91	PU	WPH-1491
W100195908	19.05	25.40	2.60	4.00	21.91	PU	WPH-684
W100191107	19.05	25.40	2.70	5.00	21.91	NBR	WPS-4573
W10019L503	19.05	26.19	2.50	4.50	22.26	PU	WPH-1671
W100196702	19.05	28.57	4.40	7.62	23.33	FKM	WPS-4432
W10020Q202	20.00	24.00	2.50	4.00	21.80	PU	WPH-1348
W100201125	20.00	24.00	2.90	3.90	21.80	NBR	WPS-4709
W100206708	20.00	24.00	3.20	4.00	21.80	FKM	WPS-4699
W100201123	20.00	24.00	4.80	8.00	21.80	NBR	WPS-4566
W100200805	20.00	24.50	2.50	4.00	22.03	NBR	WPS-5440
W100201126	20.00	25.00	3.00	5.00	22.25	NBR	WPS-4760
W100206703	20.00	25.40	2.50	4.50	22.43	FKM	WPS-2172
W10020Q201	20.00	26.00	2.60	4.00	22.70	PU	WPH-1044
W100201124	20.00	26.00	3.00	5.00	22.70	NBR	WPS-4664
W100206601	20.00	27.00	4.00	6.50	23.15	FKM	WPS-2080
W100201112	20.00	27.00	5.50	7.00	23.15	NBR	WPS-2545
W10020U201	20.00	27.00	6.40	8.70	23.15	FKM	WPS-5117
W100201021	20.00	27.50	4.80	7.20	23.38	NBR	WPS-4469
W100201104	20.00	28.00	3.50	5.00	23.60	NBR	WPS-365
W10020L504	20.00	28.00	3.50	7.00	23.60	PU	WPH-1711

Bold sizes are readily available in stock.
Other materials are available on request.

W10

Medium Duty Wiper Seal

MAX SPARE LIMITED
QUALITY. PRECISION. SPEED.

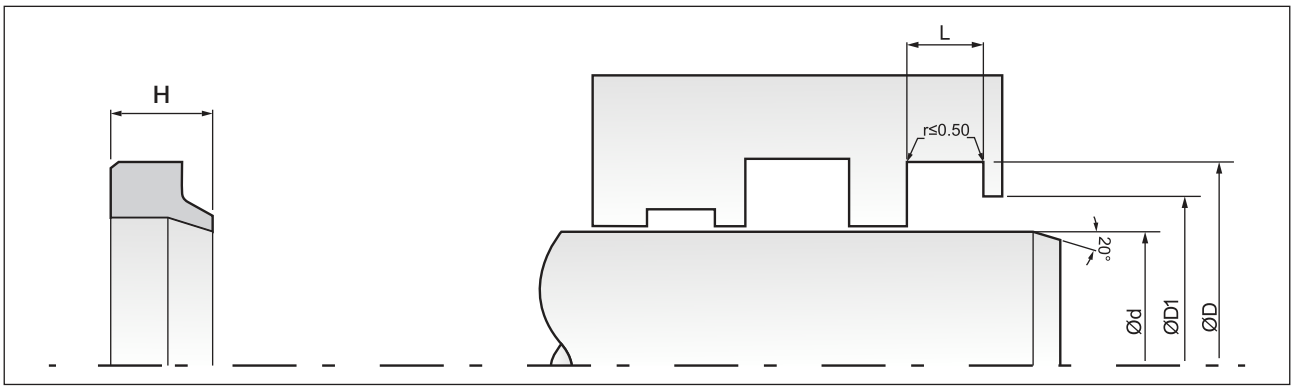

Part No.	d (f8)	D (H9)	L (+0.2)	H	D1 (H9)	Matl.	Mould No.
W10020L505	20.00	28.00	3.70	5.00	23.60	PU	WPH-1790
W100205908	20.00	28.00	4.50	6.00	23.60	PU	WPH-1039
W100201122	20.00	28.00	4.70	6.50	23.60	NBR	WPS-4555
W100201108	20.00	28.00	5.00	7.00	23.60	NBR	WPS-335
W100206704	20.00	28.00	5.00	7.00	23.60	FKM	WPS-2258
W100201109	20.00	28.00	5.00	7.50	23.60	NBR	WPS-1989
W100201109	**20.00**	**28.00**	**5.00**	**7.50**	**23.60**	**NBR**	**WPS-5633**
W100206713	20.00	28.00	6.00	8.00	23.60	FKM	WPS-5099
W10020L501	20.00	28.00	4.00	7.00	23.60	PU	WPH-432
W100201117	20.00	28.50	4.00	7.00	23.83	NBR	WPS-3390
W100201102	20.00	28.60	5.00	7.00	23.83	NBR	WPS-736
W100206705	20.00	28.60	5.00	7.00	23.87	FKM	WPS-2508
W10020L503	20.00	28.60	5.00	7.00	23.87	PU	WPH-1534
W100201102	20.00	28.60	5.00	7.00	23.87	NBR	WPS-5630
W100201114	20.00	29.00	4.00	6.00	24.05	NBR	WPS-2752
W100206602	20.00	30.00	3.50	7.00	24.50	FKM	WPS-3440
W100206201	20.00	30.00	3.75	7.50	24.50	FKM	WPS-5379
W100201128	20.00	30.00	4.00	6.00	24.50	NBR	WPS-4994
W100201116	20.00	30.00	4.00	7.00	24.50	NBR	WPS-3383
W100201113	20.00	30.00	5.00	7.00	24.50	NBR	WPS-2611
W100206712	20.00	30.00	5.00	8.00	24.50	FKM	WPS-5033
W100206401	20.00	30.00	5.00	8.70	24.50	FKM	WPS-5229
W100206707	20.00	31.50	5.00	7.00	25.18	FKM	WPS-4214
W100201118	20.00	32.00	5.00	7.00	25.40	NBR	WPS-3560
W100206711	20.00	32.00	5.00	7.00	25.40	FKM	WPS-4728
W100200804	20.00	38.00	6.00	8.00	28.10	NBR	WPS-4730
W100200802	20.00	38.10	3.00	10.10	28.15	NBR	WPS-3407
W100201120	20.57	27.53	2.64	4.76	23.70	NBR	WPS-4381
W100205909	20.63	30.16	4.76	7.50	24.92	PU	WPH-1451
W100216701	21.00	30.00	4.00	6.00	25.05	FKM	WPS-4773
W100210301	21.33	49.98	6.35	14.27	34.22	NBR	WPS-5378
W100221120	22.00	26.00	3.40	5.00	23.80	NBR	WPS-5664
W10022Q203	22.00	26.00	3.00	4.00	23.80	PU	WPH-1690
W10022L507	22.00	26.60	5.30	7.00	24.07	PU	WPH-1538
W10022Q202	22.00	28.00	2.50	4.00	24.70	PU	WPH-1349
W100221118	22.00	28.00	3.50	6.00	24.70	NBR	WPS-3811
W100226711	22.00	28.00	3.70	5.00	24.70	FKM	WPS-3769
W100226714	22.00	28.00	3.80	5.00	24.70	FKM	WPS-4375
W10022Q201	22.00	28.00	3.00	4.00	24.70	PU	WPH-1071
W100226712	22.00	28.00	4.20	6.00	24.70	FKM	WPS-4688
W100225906	22.00	28.00	4.00	5.00	24.70	PU	WPH-700
W10022L509	22.00	28.00	4.00	6.00	24.70	PU	WPH-1811
W100220803	22.00	28.00	5.00	7.00	24.70	NBR	WPS-3691
W100221117	22.00	28.00	5.00	9.00	24.70	NBR	WPS-3277
W10022L501	22.00	29.00	4.50	6.00	25.15	PU	WPH-757
W100225908	22.00	29.50	4.10	7.00	25.38	PU	WPH-1315
W10022L506	22.00	29.50	5.00	7.00	25.38	PU	WPH-1411
W100221112	22.00	30.00	2.80	4.80	25.60	NBR	WPS-2479
W100221114	22.00	30.00	4.50	6.00	25.60	NBR	WPS-2673
W100226708	22.00	30.00	5.50	7.00	25.60	FKM	WPS-2178
W10022L502	22.00	30.00	5.00	7.00	25.60	PU	WPH-779
W100226704	22.00	30.00	5.00	7.00	25.60	FKM	WPS-397

Part No.	d (f8)	D (H9)	L (+0.2)	H	D1 (H9)	Matl.	Mould No.
W100221110	22.00	30.00	5.00	7.00	25.60	NBR	WPS-5660
W100226710	22.00	30.00	6.00	8.00	25.60	FKM	WPS-2651
W100226709	22.00	30.60	5.00	7.00	25.87	FKM	WPS-1990
W100221108	**22.00**	**30.60**	**5.00**	**7.00**	**25.87**	**NBR**	**WPS-5173**
W10022L505	22.00	30.60	5.00	7.00	25.87	PU	WPH-586
W10022L508	22.00	32.00	5.00	7.00	26.50	PU	WPH-1559
W100221106	**22.00**	**32.00**	**5.00**	**7.00**	**26.50**	**NBR**	**WPS-458**
W100221115	22.00	32.00	7.00	9.50	26.50	NBR	WPS-3017
W100221107	**22.00**	**33.00**	**4.70**	**6.00**	**26.95**	**NBR**	**WPS-1991**
W100226715	22.00	34.00	6.00	8.00	27.40	FKM	WPS-4817
W100221113	22.20	28.60	3.27	4.75	25.08	NBR	WPS-2619
W100221002	22.22	31.68	4.76	7.75	26.48	HNBR	WPS-4629
W100221116	22.22	31.75	3.96	5.55	26.51	NBR	WPS-3038
W10022L511	22.23	31.75	4.50	7.15	26.51	PU	WPH-1965
W100230802	23.00	39.00	4.80	10.00	30.20	NBR	WPS-4392
W100241103	24.00	32.60	5.00	7.00	27.87	NBR	WPS-2141
W100241104	24.00	34.00	3.00	6.00	28.50	NBR	WPS-2848
W100246702	24.92	36.00	2.60	5.80	29.91	FKM	WPS-5512
W100251134	25.00	30.00	7.00	10.00	27.25	NBR	WPS-2493
W10025Q202	25.00	31.00	3.00	4.00	27.70	PU	WPH-1904
W100251015	25.00	31.00	3.00	4.00	27.70	NBR	WPS-3596
W10025Q201	25.00	31.00	3.00	5.00	27.70	PU	WPH-1100
W100251154	25.00	31.00	4.30	5.80	27.70	NBR	WPS-4981
W100256610	25.00	31.00	5.00	7.00	27.70	FKM	WPS-5136
W100251158	25.00	31.10	3.80	4.50	27.75	NBR	WPS-5254
W100251126	25.00	32.00	1.50	4.50	28.15	NBR	WPS-2181
W100255928	25.00	32.00	2.50	3.70	28.15	PU	WPH-1437
W100255926	25.00	32.00	2.50	3.80	28.15	PU	WPH-1500
W100251148	25.00	32.00	2.50	4.50	28.15	NBR	WPS-4451
W100256718	25.00	32.00	3.20	4.50	28.15	FKM	WPS-4598
W100251147	25.00	32.00	4.70	7.50	28.15	NBR	WPS-4450
W100251155	25.00	32.00	4.00	6.00	28.15	NBR	WPS-4992
W100256721	25.00	32.00	5.00	7.00	28.15	FKM	WPS-4727
W100251130	25.00	32.20	6.00	8.00	28.24	NBR	WPS-2414
W100251153	25.00	32.50	6.50	8.00	28.38	NBR	WPS-238
W100251128	25.00	33.00	3.50	5.70	28.60	NBR	WPS-2370
W100251133	25.00	33.00	4.20	6.20	28.60	NBR	WPS-2478
W100256709	25.00	33.00	4.50	6.50	28.60	FKM	WPS-2599
W100251150	25.00	33.00	4.60	6.00	28.60	NBR	WPS-4682
W100251101	**25.00**	**33.00**	**4.00**	**6.00**	**28.60**	**NBR**	**WPS-468**
W100256711	25.00	33.00	4.00	6.00	28.60	FKM	WPS-3133
W10025L509	25.00	33.00	4.00	7.00	28.60	PU	WPH-1789
W100251159	25.00	33.00	5.50	7.00	28.60	NBR	WPS-5409
W100256728	25.00	33.00	5.50	7.50	28.60	FKM	WPS-5186
W100256703	25.00	33.00	5.00	7.00	28.60	FKM	WPS-350
W10025L502	25.00	33.00	5.00	7.00	28.60	PU	WPH-780
W100251124	25.00	33.00	5.00	7.00	28.60	NBR	WPS-331
W100251139	25.00	33.00	6.50	8.00	28.60	NBR	WPS-3147
W10025L506	25.00	33.60	5.30	7.00	28.87	PU	WPH-1410
W100256729	25.00	33.60	5.30	7.00	28.87	FKM	WPS-2143
W100251104	**25.00**	**33.60**	**5.00**	**7.00**	**28.87**	**NBR**	**WPS-1992**
W100256719	25.00	33.60	5.00	8.00	28.87	FKM	WPS-4529

Bold sizes are readily available in stock.
Other materials are available on request.

MAX SPARE LIMITED
QUALITY. PRECISION. SPEED.

W10

Medium Duty Wiper Seal

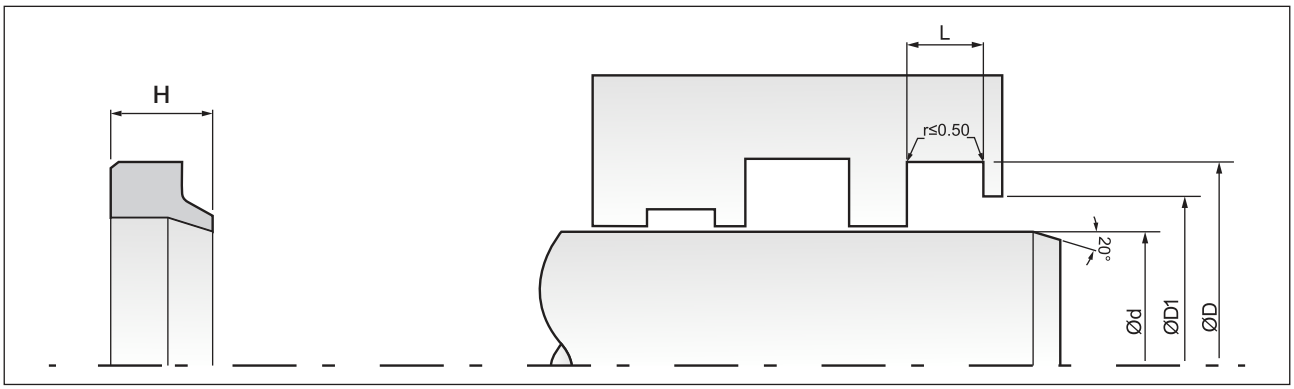

Part No.	d (f8)	D (H9)	L (+0.2)	H	D1 (H9)	Matl.	Mould No.
WRE0251101	25.00	34.00	2.20	4.70	29.05	NBR	WPS-1200
W100256716	25.00	34.00	3.00	7.50	29.05	FKM	WPS-3970
W10025L504	25.00	34.00	5.55	7.50	29.05	PU	WPH-1299
W100251160	25.00	34.00	5.00	7.00	29.05	NBR	WPS-5593
W100256724	25.00	34.50	5.50	7.50	29.28	FKM	WPS-5043
W100251135	25.00	35.00	3.00	7.00	29.50	NBR	WPS-2822
W100255925	25.00	35.00	4.50	6.00	29.50	PU	WPH-1330
W100256608	25.00	35.00	4.00	6.20	29.50	FKM	WPS-2081
W10025L503	25.00	35.00	5.00	7.00	29.50	PU	WPH-187
W100256714	25.00	35.00	5.00	7.00	29.50	FKM	WPS-3804
W100255924	25.00	35.00	5.00	8.00	29.50	PU	WPH-1116
W100251138	25.00	35.00	5.00	8.00	29.50	NBR	WPS-3138
W100251129	25.00	35.00	6.50	8.50	29.50	NBR	WPS-2394
W100251108	**25.00**	**35.00**	**7.00**	**10.00**	**29.50**	**NBR**	**WPS-1410**
W100256713	25.00	35.00	7.00	10.00	29.50	FKM	WPS-3219
W100251140	25.00	35.40	9.00	5.00	29.68	NBR	WPS-3199
W100256717	25.00	36.00	5.00	8.00	29.95	FKM	WPS-4137
W100256723	25.00	36.00	8.00	12.00	29.95	FKM	WPS-4907
W100256722	25.00	36.50	3.50	5.00	30.18	FKM	WPS-4748
W100256712	25.00	37.50	2.60	7.00	30.63	FKM	WPS-3136
W10025L507	25.00	39.00	6.00	9.00	31.30	PU	WPH-1487
W100256707	25.00	40.00	3.00	7.00	31.75	FKM	WPS-2534
W100251142	25.00	40.00	5.00	7.00	31.75	NBR	WPS-3301
W100251125	25.00	41.00	2.00	6.00	32.20	NBR	WPS-2164
W100251136	25.00	42.00	7.00	10.00	32.65	NBR	WPS-3074
W100256730	25.00	42.80	5.50	7.00	33.01	FKM	WPS-5382
W100251145	25.40	31.50	3.00	5.00	28.15	NBR	WPS-3703
W100256715	25.40	31.75	2.30	3.30	28.26	FKM	WPS-3852
W100255919	25.40	31.75	2.50	4.80	28.26	PU	WPH-1308
W100251143	25.40	31.75	2.54	4.80	28.26	NBR	WPS-3584
W100256727	25.40	31.75	2.80	5.00	28.26	FKM	WPS-5168
W100251141	25.40	31.75	4.76	6.35	28.26	NBR	WPS-3255
W100251144	25.40	32.00	3.00	5.00	28.37	NBR	WPS-3704
W100256611	25.40	32.35	2.60	4.80	28.53	FKM	WPS-5177
W10025L511	25.40	32.38	2.60	4.50	28.54	PU	WPH-1976
W100256725	25.40	33.00	2.80	5.00	28.82	FKM	WPS-5107
W100255923	25.40	33.34	2.18	3.52	28.97	PU	WPH-1074
W100256706	25.40	34.00	5.00	7.00	29.27	FKM	WPS-2369
W100250801	25.40	34.62	3.96	7.13	29.55	NBR	WPS-4795
W100255927	25.40	34.92	4.50	7.20	29.68	PU	WPH-1450
W100251149	25.40	34.92	5.00	7.00	29.68	NBR	WPS-4547
W10025L510	25.40	34.93	4.50	7.15	29.69	PU	WPH-1964
W100251157	25.50	35.00	3.70	5.00	29.78	NBR	WPS-5170
W100251127	25.50	38.00	5.50	11.00	31.13	NBR	WPS-2331
W100281123	25.80	38.50	5.00	8.00	31.52	NBR	WPS-4939
W100261105	26.00	32.00	3.30	7.00	28.70	NBR	WPS-3944
W100261107	26.00	32.00	3.50	5.00	28.70	NBR	WPS-4855
W100261108	26.00	34.00	4.80	7.00	29.60	NBR	WPS-5273
W100261104	26.00	34.60	5.00	8.00	29.87	NBR	WPS-2757
W100265902	26.00	40.00	5.00	7.50	32.30	PU	WPH-1505
W100261106	26.00	40.00	6.00	12.00	32.30	NBR	WPS-4805
W10028L503	28.00	30.60	5.30	7.00	29.17	PU	WPH-1540

Part No.	d (f8)	D (H9)	L (+0.2)	H	D1 (H9)	Matl.	Mould No.
W100281118	28.00	33.00	5.00	8.00	30.25	NBR	WPS-3224
W100286701	28.00	34.00	3.00	6.00	30.70	FKM	WPS-3210
W10028Q201	28.00	34.00	3.00	4.00	30.70	PU	WPH-1072
W100281111	28.00	35.00	5.00	7.00	31.15	NBR	WPS-629
W100286711	28.00	35.30	4.00	6.00	31.29	FKM	WPS-4871
W100286709	28.00	36.00	4.00	6.00	31.60	FKM	WPS-3818
W100285913	28.00	36.00	4.00	6.00	31.60	PU	WPH-1267
W100286712	28.00	36.00	4.00	7.00	31.60	FKM	WPS-4966
W100286702	28.00	36.00	5.00	7.00	31.60	FKM	WPS-3009
W10028L501	28.00	36.00	5.00	7.00	31.60	PU	WPH-1313
W100281105	**28.00**	**36.00**	**5.00**	**7.00**	**31.60**	**NBR**	**WPS-1172**
W100281110	28.00	36.00	5.00	8.00	31.60	NBR	WPS-247
W100286713	28.00	36.00	6.00	7.00	31.60	FKM	WPS-5143
W100280801	28.00	36.00	6.00	8.00	31.60	NBR	WPS-4729
W100286703	28.00	36.60	5.00	7.00	31.87	FKM	WPS-2054
W100281119	28.00	37.00	4.00	7.00	32.05	NBR	WPS-3722
W100286704	28.00	38.00	3.00	6.00	32.50	FKM	WPS-2174
W100281114	28.00	38.00	4.00	6.00	32.50	NBR	WPS-2368
W100286715	28.00	38.00	5.50	8.50	32.50	FKM	WPS-5356
W100281122	28.00	38.00	5.00	7.00	32.50	NBR	WPS-5448
W100286708	28.00	38.00	5.00	7.00	32.50	FKM	WPS-3610
W100286706	28.00	38.00	5.00	8.00	32.50	FKM	WPS-2676
W100286714	28.00	38.00	6.00	7.00	32.50	FKM	WPS-5142
W10028L506	28.00	38.00	6.00	7.00	32.50	PU	WPH-1887
W100285914	28.00	39.60	5.10	10.00	33.22	PU	WPH-1412
W100281113	28.00	40.00	4.00	7.00	33.40	NBR	WPS-2249
W100285912	28.00	40.00	5.00	10.00	33.40	PU	WPH-1038
W100281120	28.50	31.50	3.50	4.50	29.85	NBR	WPS-3996
W100281115	28.50	35.40	2.50	4.00	31.61	NBR	WPS-2639
W10028L505	28.50	36.00	2.60	4.80	31.88	PU	WPH-1829
W100296701	29.00	36.00	4.00	6.00	32.15	FKM	WPS-3294
W100306709	30.00	35.00	4.20	7.00	32.25	FKM	WPS-4742
W10030Q201	30.00	36.00	3.00	4.00	32.70	PU	WPH-1046
W100300801	30.00	36.00	4.00	6.00	32.70	NBR	WPS-3987
W10030L511	30.00	36.00	5.00	7.00	32.70	PU	WPH-1715
W10030L510	30.00	36.00	6.00	8.00	32.70	PU	WPH-1637
W10030L505	30.00	38.00	4.50	6.60	33.60	PU	WPH-890
W10030L508	30.00	38.00	4.00	7.00	33.60	PU	WPH-1233
W100306711	30.00	38.00	4.00	8.50	33.60	FKM	WPS-5225
W100301112	**30.00**	**38.00**	**5.00**	**7.00**	**33.60**	**NBR**	**WPS-5628**
W100306703	30.00	38.00	5.00	7.00	33.60	FKM	WPS-1020
W10030L501	30.00	38.00	5.00	7.00	33.60	PU	WPH-775
W100301112	30.00	38.00	5.00	7.00	33.60	NBR	WPS-4766
W10030L507	30.00	38.00	6.00	9.00	33.60	PU	WPH-1189
W100306710	30.00	38.60	5.30	7.00	33.87	FKM	WPS-4895
W100306705	30.00	38.60	5.00	7.00	33.87	FKM	WPS-2430
W10030L506	30.00	38.60	5.00	7.00	33.87	PU	WPH-588
W100301120	30.00	39.00	2.00	5.00	34.05	NBR	WPS-5195
W100301117	30.00	39.10	6.50	8.00	34.10	NBR	WPS-3406
W100301121	30.00	40.00	4.00	7.00	34.50	NBR	WPS-5449
W10030L502	30.00	40.00	5.00	7.00	34.50	PU	WPH-799
W100301116	30.00	40.00	5.00	7.00	34.50	NBR	WPS-568

Bold sizes are readily available in stock.
Other materials are available on request.

W10

Medium Duty Wiper Seal

MAX SPARE LIMITED
QUALITY. PRECISION. SPEED.

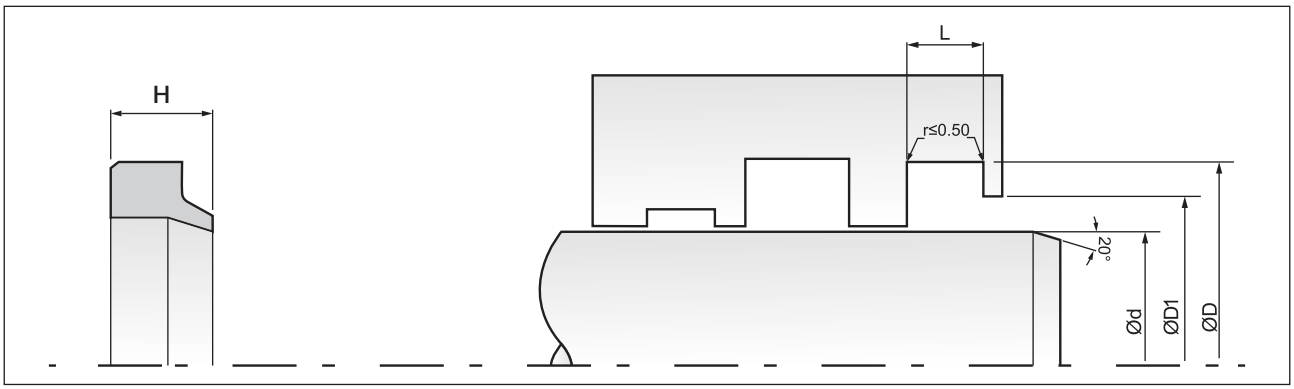

Part No.	d (f8)	D (H9)	L (+0.2)	H	D1 (H9)	Matl.	Mould No.
W100306707	30.00	40.00	5.00	7.00	34.50	FKM	WPS-3949
W100306702	30.00	40.00	5.00	8.00	34.50	FKM	WPS-4022
W100301109	30.00	40.00	6.00	8.50	34.50	NBR	WPS-3877
W100301122	30.00	40.00	7.00	9.00	34.50	NBR	WPS-5408
W100301115	30.00	40.00	7.00	9.50	34.50	NBR	WPS-2537
W100301119	30.00	42.00	6.00	9.00	35.40	NBR	WPS-5087
W100306706	30.00	42.00	7.00	10.00	35.40	FKM	WPS-3590
W100306714	30.00	42.50	5.00	11.40	35.63	FKM	WPS-5365
W100306601	30.00	47.00	4.50	6.30	37.65	FKM	WPS-2419
W100301118	30.16	38.10	6.00	9.52	33.73	NBR	WPS-3814
W10031L503	31.00	43.00	5.00	7.00	36.40	PU	WPH-1775
W10031L502	31.50	39.00	5.00	7.00	34.88	PU	WPH-1494
W10031L501	31.75	41.28	4.80	7.14	36.04	PU	WPH-918
W10032L505	32.00	38.00	3.00	4.00	34.70	PU	WPH-1980
W100321115	32.00	38.00	4.00	6.00	34.70	NBR	WPS-4979
W100325905	32.00	38.00	6.50	9.65	34.70	PU	WPH-1162
W100326706	32.00	38.00	6.00	8.00	34.70	FKM	WPS-131
W100321119	32.00	39.00	2.55	4.50	35.15	NBR	WPS-5615
W100326704	32.00	40.00	4.00	6.00	35.60	FKM	WPS-2218
W100321116	32.00	40.00	4.00	7.00	35.60	NBR	WPS-5450
W10032L502	32.00	40.00	5.00	7.00	35.60	PU	WPH-778
W100321101	**32.00**	**40.00**	**5.00**	**7.00**	**35.60**	**NBR**	**WPS-503**
W100326707	32.00	40.00	5.00	7.00	35.60	FKM	WPS-3795
W100325907	32.00	40.00	9.00	12.00	35.60	PU	WPH-1050
W100326711	32.00	40.60	5.30	6.50	35.87	FKM	WPS-4961
W100321107	32.00	40.60	5.00	7.00	35.87	NBR	WPS-2128
W100326705	32.00	40.60	5.00	7.00	35.87	FKM	WPS-3035
W100321109	32.00	41.00	5.00	7.00	36.05	NBR	WPS-3161
W100325908	32.00	42.00	3.70	6.40	36.50	PU	WPH-1102
W100321117	32.00	42.00	4.50	7.00	36.50	NBR	WPS-5447
W10032L501	32.00	42.00	5.00	7.00	36.50	PU	WPH-659
W100321113	32.00	42.00	5.00	7.00	36.50	NBR	WPS-4303
W100326709	32.00	42.00	5.00	7.00	36.50	FKM	WPS-4916
W100321108	32.00	42.00	7.00	10.00	36.50	NBR	WPS-3011
W100321103	32.00	43.50	5.00	9.00	37.18	NBR	WPS-1197
W100321111	32.00	44.00	6.00	8.00	37.40	NBR	WPS-3260
W100321112	32.00	44.00	6.00	9.00	37.40	NBR	WPS-3995
W100321110	32.00	44.00	7.00	10.00	37.40	NBR	WPS-3261
W100326708	32.00	45.00	6.00	8.00	37.85	FKM	WPS-4710
W100331102	33.00	41.00	5.00	7.00	36.60	NBR	WPS-3222
W100331103	33.73	42.06	2.80	5.00	37.48	NBR	WPS-5418
W100336701	33.73	42.06	2.80	5.00	37.48	FKM	WPS-5176
W100341103	34.00	43.50	6.50	8.00	38.28	NBR	WPS-3031
W100346705	34.00	44.00	5.00	7.00	38.50	FKM	WPS-3130
W100341104	34.85	42.85	2.50	3.95	38.45	NBR	WPS-3070
W100346703	34.85	42.85	2.50	3.95	38.45	FKM	WPS-2521
W100346704	34.92	41.91	4.00	7.00	38.07	FKM	WPS-3110
W100341102	34.92	42.86	2.38	4.76	38.49	NBR	WPS-3066
W10034L501	34.93	44.45	4.50	7.15	39.21	PU	WPH-1963
W100355907	35.00	40.00	3.50	6.50	37.25	PU	WPH-1109
W10035119	35.00	42.00	2.50	4.00	38.15	NBR	WPS-5392
W100356715	35.00	42.00	5.00	7.00	38.15	FKM	WPS-4495

Part No.	d (f8)	D (H9)	L (+0.2)	H	D1 (H9)	Matl.	Mould No.
W100356608	35.00	42.50	2.50	5.00	38.38	FKM	WPS-2246
W100356721	35.00	43.00	2.50	4.50	38.60	FKM	WPS-5185
W100356709	35.00	43.00	2.80	5.00	38.60	FKM	WPS-2425
W100351120	35.00	43.00	4.20	6.50	38.60	NBR	WPS-5528
W10035L507	35.00	43.00	4.00	7.00	38.60	PU	WPH-1787
W10035L502	35.00	43.00	5.00	7.00	38.60	PU	WPH-866
W100351103	**35.00**	**43.00**	**5.00**	**7.00**	**38.60**	**NBR**	**WPS-2324**
W100356704	35.00	43.00	5.00	7.00	38.60	FKM	WPS-315
W100351122	35.00	43.00	6.00	8.00	38.60	NBR	WPS-5598
W100356707	35.00	43.60	5.00	7.00	38.87	FKM	WPS-2111
W100351003	35.00	44.00	3.00	8.00	39.05	NBR	WPS-317
W100356712	35.00	44.00	4.00	5.00	39.05	FKM	WPS-3978
W100351113	35.00	44.00	5.00	11.00	39.05	NBR	WPS-3624
W100356710	35.00	44.00	5.00	7.00	39.05	FKM	WPS-3760
W100351112	35.00	44.00	5.00	7.00	39.05	NBR	WPS-2474
W100356714	35.00	44.00	5.00	8.00	39.05	FKM	WPS-1587
W100351109	**35.00**	**44.00**	**5.00**	**8.00**	**39.05**	**NBR**	**WPS-1994**
W100351118	**35.00**	**44.00**	**6.00**	**8.00**	**39.05**	**NBR**	**WPS-5278**
W10035L503	35.00	45.00	4.00	7.00	39.50	PU	WPH-870
W100356717	35.00	45.00	5.50	7.00	39.50	FKM	WPS-4680
W100351115	35.00	45.00	5.00	7.00	39.50	NBR	WPS-4271
W100356713	35.00	46.00	5.00	8.00	39.95	FKM	WPS-4017
W100355906	35.00	47.00	3.00	6.00	40.40	PU	WPH-1052
W100351121	35.00	47.00	5.30	11.00	40.40	NBR	WPS-5576
W100356706	35.00	47.00	5.00	10.00	40.40	FKM	WPS-4677
W100351117	35.00	47.00	5.00	7.00	40.40	NBR	WPS-5205
W100351010	35.00	47.00	6.00	9.00	40.40	NBR	WPS-2220
W100351116	35.00	47.00	7.00	10.00	40.40	NBR	WPS-4838
W100356719	35.00	47.50	4.00	8.00	40.63	FKM	WPS-5034
W100356708	35.00	48.00	5.50	11.00	40.85	FKM	WPS-2168
W100356723	35.00	48.00	5.50	10.00	40.85	FKM	WPS-5325
W100356720	35.00	48.00	6.00	12.00	40.85	FKM	WPS-5153
W100356711	35.00	48.00	7.30	10.00	40.85	FKM	WPS-3851
W100351111	35.00	50.00	5.00	10.00	41.75	NBR	WPS-2415
W100350801	35.00	52.00	4.80	10.00	42.65	NBR	WPS-4393
W100351114	35.50	44.00	5.00	6.50	39.33	NBR	WPS-4129
W100365911	36.00	42.00	3.00	4.00	38.70	PU	WPH-1089
W100361111	**36.00**	**43.00**	**4.00**	**7.00**	**39.15**	**NBR**	**WPS-1987**
W100366708	36.00	44.00	3.00	7.00	39.60	FKM	WPS-3862
W100366712	36.00	44.00	4.50	6.50	39.60	FKM	WPS-4819
W100361108	36.00	44.00	4.00	7.00	39.60	NBR	WPS-1497
W100361103	**36.00**	**44.00**	**5.00**	**7.00**	**39.60**	**NBR**	**WPS-1988**
W100365902	36.00	44.00	5.00	7.00	39.60	PU	WPH-1166
W100366703	36.00	44.00	5.00	7.00	39.60	FKM	WPS-752
W100366718	36.00	44.00	5.00	8.00	39.60	FKM	WPS-5395
W10036L501	36.00	44.60	5.30	6.50	39.87	PU	WPH-730
W100361106	36.00	44.60	5.00	7.00	39.87	FKM	WPS-2057
W100366713	36.00	45.00	4.50	7.00	40.05	FKM	WPS-4825
W100361105	**36.00**	**45.00**	**5.00**	**7.00**	**40.05**	**NBR**	**WPS-3817**
W100365901	36.00	45.00	5.00	7.00	40.05	PU	WPH-1051
W100366707	36.00	45.00	5.00	7.50	40.05	FKM	WPS-2213
W100366710	36.00	45.00	5.00	9.00	40.05	FKM	WPS-5152

Bold sizes are readily available in stock.
Other materials are available on request.

W10

Medium Duty Wiper Seal

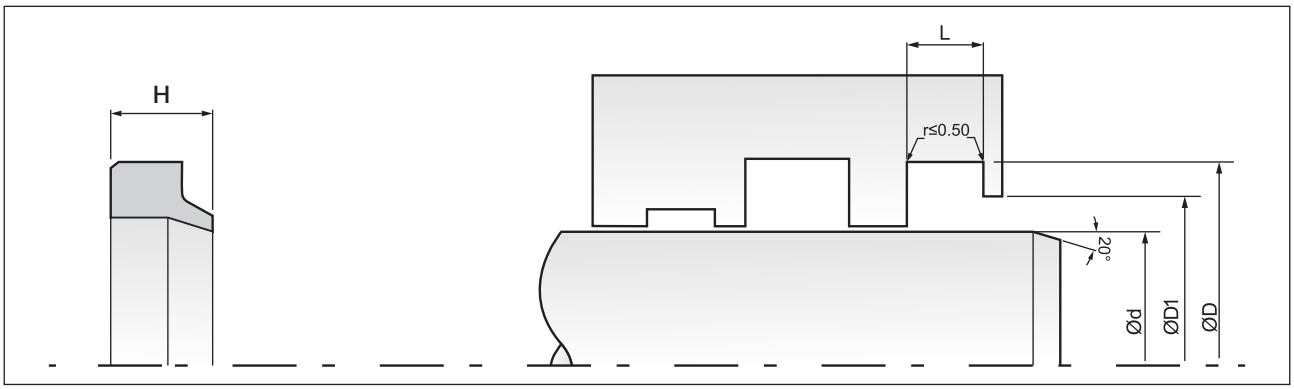

Part No.	d (f8)	D (H9)	L (+0.2)	H	D1 (H9)	Matl.	Mould No.
W10361117	36.00	45.00	6.00	8.70	40.05	NBR	WPS-4240
W100361101	36.00	45.00	7.00	10.00	40.05	NBR	WPS-106
W10036L505	36.00	46.00	5.00	7.00	40.50	PU	WPH-1558
W100366716	36.00	46.00	5.00	7.00	40.50	FKM	WPS-5139
W100361114	36.00	46.00	5.00	7.00	40.50	NBR	WPS-3308
W100361119	36.00	46.00	5.00	7.50	40.50	NBR	WPS-4452
W100366717	36.00	46.00	6.00	7.00	40.50	FKM	WPS-5151
W100361120	36.00	46.00	6.00	8.00	40.50	NBR	WPS-5515
W100361109	**36.00**	**46.00**	**7.00**	**10.00**	**40.50**	**NBR**	**WPS-756**
W100366714	36.00	48.00	5.40	10.60	41.40	FKM	WPS-4955
W100366711	36.00	48.00	5.00	8.00	41.40	FKM	WPS-4631
W100361005	36.00	50.00	4.00	8.00	42.30	NBR	WPS-2771
W100361113	36.83	49.83	3.00	6.60	42.68	NBR	WPS-2689
W100376702	37.00	45.00	5.00	7.30	40.60	FKM	WPS-4908
W100371101	37.00	46.00	4.50	6.00	41.05	NBR	WPS-2570
W100376701	37.00	46.60	5.00	7.00	41.32	FKM	WPS-3330
W100381118	38.00	43.40	3.00	4.00	40.43	NBR	WPS-3134
W100381113	38.00	45.00	5.00	7.00	41.15	NBR	WPS-2903
W100381111	38.00	46.00	2.50	5.00	41.60	NBR	WPS-2505
W100381124	38.00	46.00	4.80	7.00	41.60	NBR	WPS-5017
W100381119	38.00	46.00	5.00	7.00	41.60	NBR	WPS-4282
W100386704	38.00	46.00	5.00	7.00	41.60	FKM	WPS-3010
W100386705	38.00	46.60	5.00	7.00	41.87	FKM	WPS-3334
W100381110	38.00	46.60	5.00	7.00	41.87	NBR	WPS-2127
W100381114	38.00	47.00	5.00	7.00	42.05	NBR	WPS-2924
W100386603	38.00	48.00	3.70	5.00	42.50	FKM	WPS-2229
W100381123	38.00	48.00	5.00	10.00	42.50	NBR	WPS-4921
W100381125	38.00	48.00	5.00	7.00	42.50	NBR	WPS-5446
W10038L502	38.00	48.00	5.00	7.00	42.50	PU	WPH-766
W100385909	38.00	48.50	4.50	7.00	42.73	PU	WPH-1086
W100381115	38.00	49.20	7.00	12.00	43.04	NBR	WPS-2965
W100381121	38.00	54.00	4.00	10.00	45.20	NBR	WPS-4444
W100381116	38.10	45.40	3.70	4.90	41.39	NBR	WPS-3079
W10038L503	38.10	45.77	2.64	4.77	41.55	PU	WPH-1870
W100381122	38.10	47.62	4.50	7.20	42.38	NBR	WPS-4546
W100385910	38.10	47.62	4.75	7.00	42.38	PU	WPH-1434
W100381112	38.10	47.62	4.90	9.80	42.38	NBR	WPS-2690
W100381120	38.10	47.62	5.10	10.00	42.38	NBR	WPS-4362
W100386706	38.10	48.00	4.50	7.60	42.56	FKM	WPS-4368
W10038L501	38.10	48.20	4.67	6.35	42.65	PU	WPH-664
W100381127	38.10	49.00	3.00	7.00	43.01	NBR	WPS-5666
W100381126	38.10	50.80	3.00	6.30	43.82	NBR	WPS-5619
W100391101	39.00	45.00	3.80	6.80	41.70	NBR	WPS-4536
W100395901	39.00	48.00	4.50	7.00	43.05	PU	WPH-1075
W100396401	39.00	49.00	3.00	6.00	43.50	FKM	WPS-3503
W10039L501	39.00	50.00	6.00	10.50	43.95	PU	WPH-1508
W100401134	40.00	46.00	5.00	8.00	42.70	NBR	WPS-5271
W100401131	40.00	46.50	4.80	7.20	42.93	NBR	WPS-4126
W100406714	40.00	46.80	3.20	5.00	43.06	FKM	WPS-4078
W100401122	40.00	47.00	1.50	4.50	43.15	NBR	WPS-3226
W100406716	40.00	47.00	5.00	7.00	43.15	FKM	WPS-4414
W100406717	40.00	48.00	2.70	4.70	43.60	FKM	WPS-4628

Part No.	d (f8)	D (H9)	L (+0.2)	H	D1 (H9)	Matl.	Mould No.
W100401124	40.00	48.00	3.00	5.00	43.60	NBR	WPS-3299
W100406606	40.00	48.00	3.00	7.00	43.60	FKM	WPS-2292
W100405914	40.00	48.00	4.50	7.00	43.60	PU	WPH-1123
W10040L501	40.00	48.00	4.70	6.50	43.60	PU	WPH-232
W100405916	40.00	48.00	4.00	7.00	43.60	PU	WPH-1333
W100401112	40.00	48.00	4.00	7.50	43.60	FKM	WPS-775
W10040L512	40.00	48.00	5.50	6.50	43.60	PU	WPH-943
W10040L503	40.00	48.00	5.00	7.00	43.60	PU	WPH-673
W10040L514	40.00	48.00	5.00	7.00	43.60	PU	WPH-1389
W100401110	**40.00**	**48.00**	**5.00**	**7.00**	**43.60**	**NBR**	**WPS-1986**
W100406719	40.00	48.00	5.00	7.50	43.60	FKM	WPS-4812
W10040L508	40.00	48.00	5.00	8.00	43.60	PU	WPH-203
W100406710	40.00	48.00	5.00	9.00	43.60	FKM	WPS-3321
W100401133	40.00	48.00	6.00	8.00	43.60	NBR	WPS-4551
W100406704	40.00	48.00	5.00	7.00	43.60	FKM	WPS-390
W100406715	40.00	48.60	5.30	7.00	43.87	FKM	WPS-4829
W10040L516	40.00	48.60	5.30	7.00	43.87	PU	WPH-1730
W100401104	40.00	48.60	5.00	7.00	43.87	NBR	WPS-5538
W10040L505	40.00	48.60	5.00	7.00	43.87	PU	WPH-790
W100401104	**40.00**	**48.60**	**5.00**	**7.00**	**43.87**	**NBR**	**WPS-580**
W100401125	40.00	49.00	3.00	5.00	44.05	NBR	WPS-3300
W100401119	40.00	49.00	5.00	7.00	44.05	NBR	WPS-2271
W100401127	40.00	49.00	7.00	10.00	44.05	NBR	WPS-3520
W10040L517	40.00	50.00	3.60	7.50	44.50	PU	WPH-1786
W100406718	40.00	50.00	4.00	7.00	44.50	FKM	WPS-4700
W100406713	40.00	50.00	5.50	10.50	44.50	FKM	WPS-3794
W100401113	40.00	50.00	5.00	7.00	44.50	NBR	WPS-1811
W100406703	40.00	50.00	5.00	7.00	44.50	FKM	WPS-179
W10040L504	40.00	50.00	5.00	7.00	44.50	PU	WPH-776
W100401109	**40.00**	**50.00**	**5.00**	**8.00**	**44.50**	**NBR**	**WPS-2543**
W10040L502	40.00	50.00	6.00	10.00	44.50	PU	WPH-633
W100401126	40.00	50.00	6.00	8.00	44.50	NBR	WPS-3519
W10040L507	40.00	50.00	7.00	10.00	44.50	PU	WPH-801
W10040L510	40.00	50.00	7.00	12.00	44.50	PU	WPH-873
W10040L513	40.00	51.50	5.00	7.00	45.18	PU	WPH-1357
W100406709	40.00	51.50	5.00	7.00	45.18	FKM	WPS-3309
W100406708	40.00	52.00	3.00	9.50	45.40	FKM	WPS-2709
W100401123	40.00	52.00	5.70	11.00	45.40	NBR	WPS-3272
W100406711	40.00	52.00	5.70	11.00	45.40	FKM	WPS-3544
W10040L515	40.00	52.00	5.00	8.00	45.40	PU	WPH-1436
W100401120	40.00	52.00	7.00	10.00	45.40	NBR	WPS-2344
W10040L518	40.00	52.00	7.00	10.00	45.40	PU	WPH-1948
W100401128	40.00	53.00	5.00	7.00	45.85	NBR	WPS-3958
W100400801	40.00	55.00	5.00	8.00	46.75	NBR	WPS-3866
W100400701	40.00	56.00	7.50	12.50	47.20	NBR	WPS-4252
W100421105	42.00	47.00	3.00	5.00	44.25	NBR	WPS-4322
W100421104	42.00	50.00	5.00	7.00	45.60	NBR	WPS-1985
W100426703	42.00	50.60	5.00	7.00	45.87	FKM	WPS-2760
WCA0421104	**42.00**	**52.00**	**7.50**	**10.50**	**46.50**	**NBR**	**WPS-4667**
W100426704	42.00	53.00	5.00	7.00	46.95	FKM	WPS-5342
W100436701	43.00	56.00	4.80	8.00	48.85	FKM	WPS-2622
W100436702	43.25	55.95	5.00	8.00	48.97	FKM	WPS-5102

Bold sizes are readily available in stock.
Other materials are available on request.

W10

Medium Duty Wiper Seal

MAX SPARE LIMITED
QUALITY. PRECISION. SPEED.

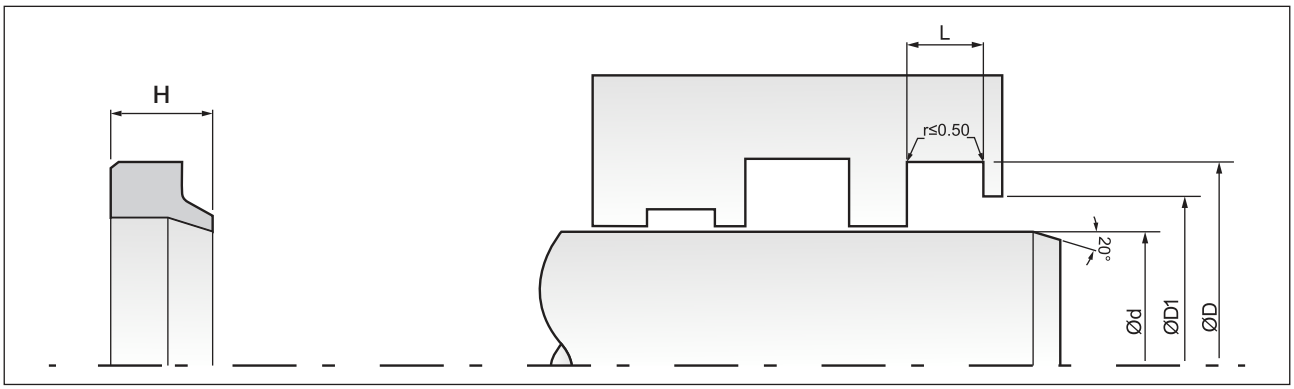

Part No.	d (f8)	D (H9)	L (+0.2)	H	D1 (H9)	Matl.	Mould No.
W100446709	44.00	52.00	4.75	8.50	47.60	FKM	WPS-5267
W100446703	44.00	55.00	5.00	8.00	48.95	FKM	WPS-2632
W1004467016	44.00	55.00	7.00	9.50	48.95	FKM	WPS-2559
W100441105	44.00	56.00	2.50	6.00	49.40	NBR	WPS-2255
W100446704	44.45	52.40	5.00	7.00	48.03	FKM	WPS-2652
W100446705	44.45	52.45	2.50	4.60	48.05	FKM	WPS-3447
W100446501	44.45	53.57	5.00	8.00	48.55	FKM	WPS-5389
W100445906	44.45	53.97	4.50	7.00	48.73	PU	WPH-1416
W100446602	44.45	53.97	4.70	7.92	48.73	FKM	WPS-2557
W10044L501	44.45	53.98	4.50	7.15	48.74	PU	WPH-1962
W100441106	44.45	55.16	4.00	6.00	49.27	NBR	WPS-2473
W100445905	44.45	57.15	7.94	9.52	50.17	PU	WPH-712
W100441107	44.50	52.00	2.50	4.00	47.88	NBR	WPS-2506
W100451130	45.00	50.00	6.00	8.00	47.25	NBR	WPS-4672
W10045L510	45.00	52.00	2.60	4.50	48.15	PU	WPH-1903
W100451119	45.00	52.00	5.00	7.00	48.15	NBR	WPS-2454
W100456718	45.00	52.15	1.80	5.00	48.22	FKM	WPS-3643
W100456741	45.00	53.00	3.50	4.50	48.60	FKM	WPS-5105
W100456735	45.00	53.00	4.20	7.50	48.60	FKM	WPS-4876
W10045R301	45.00	53.00	4.00	7.00	48.60	PU	WPH-1112
W100451109	45.00	53.00	4.00	7.50	48.60	NBR	WPS-5039
W100456725	45.00	53.00	4.00	8.00	48.60	FKM	WPS-3977
W100455916	45.00	53.00	5.00	7.00	48.60	PU	WPH-987
W100456715	45.00	53.00	5.00	6.50	48.60	FKM	WPS-3037
W10045L501	45.00	53.00	5.00	7.00	48.60	PU	WPH-1177
W100451113	45.00	53.00	5.00	7.00	48.60	NBR	WPS-4324
W100456744	45.00	53.00	5.00	7.50	48.60	FKM	WPS-5441
W100451123	45.00	53.00	5.00	8.00	48.60	NBR	WPS-3078
W100456732	45.00	53.00	5.00	8.00	48.60	FKM	WPS-4693
W100456714	45.00	53.00	6.00	8.50	48.60	FKM	WPS-2148
W100451115	45.00	53.60	5.00	7.00	48.87	NBR	WPS-2138
W100456716	45.00	53.60	5.00	7.00	48.87	FKM	WPS-2058
W100456728	45.00	54.00	2.50	4.50	49.05	FKM	WPS-4336
W100456729	45.00	54.00	4.50	7.00	49.05	FKM	WPS-4577
W100456706	45.00	54.00	4.00	7.00	49.05	FKM	WPS-2280
W100451132	45.00	54.00	5.70	8.00	49.05	NBR	WPS-4861
W10045L509	45.00	54.00	5.00	7.00	49.05	PU	WPH-1885
W100451136	45.00	54.00	5.00	7.00	49.05	NBR	WPS-5282
W100456721	45.00	54.00	5.00	8.00	49.05	FKM	WPS-3796
W100451118	45.00	54.00	6.50	8.00	49.05	NBR	WPS-2364
W100451124	45.00	54.00	6.00	8.00	49.05	NBR	WPS-3217
W100456736	45.00	54.00	6.00	8.00	49.05	FKM	WPS-4903
W100456740	45.00	55.00	3.00	7.00	49.50	FKM	WPS-5049
W100451121	45.00	55.00	3.00	9.00	49.50	NBR	WPS-2697
W100456730	45.00	55.00	4.60	7.00	49.50	FKM	WPS-4815
W100456731	45.00	55.00	4.00	7.00	49.50	FKM	WPS-891
W100456401	45.00	55.00	5.30	7.80	49.50	FKM	WPS-2809
W100455918	45.00	55.00	5.00	10.00	49.50	PU	WPH-1036
W100451133	45.00	55.00	5.00	10.00	49.50	NBR	WPS-4891
W100451101	**45.00**	**55.00**	**5.00**	**7.00**	**49.50**	**NBR**	**WPS-4231**
W10045L502	45.00	55.00	5.00	7.00	49.50	PU	WPH-1733
W100456707	45.00	55.00	5.00	8.00	49.50	FKM	WPS-2480

Part No.	d (f8)	D (H9)	L (+0.2)	H	D1 (H9)	Matl.	Mould No.
W10045L505	45.00	55.00	5.00	8.00	49.50	PU	WPH-850
W100455920	45.00	55.00	6.50	11.00	49.50	PU	WPH-1607
W100456726	45.00	55.00	6.00	9.00	49.50	FKM	WPS-4053
W100451104	45.00	55.00	7.00	10.00	49.50	NBR	WPS-236
W10045L504	45.00	55.60	5.30	6.50	49.77	PU	WPH-727
W10045L506	45.00	55.60	5.30	7.00	49.77	PU	WPH-895
W100456606	45.00	55.60	5.30	7.00	49.77	FKM	WPS-3395
W100451134	45.00	55.60	5.30	7.00	49.77	NBR	WPS-5089
W100456701	45.00	55.60	5.00	7.00	49.77	FKM	WPS-594
W100456734	45.00	56.00	4.50	6.50	49.95	FKM	WPS-4822
W100451112	45.00	56.00	5.00	7.00	49.95	NBR	WPS-906
W100456719	45.00	56.00	6.00	8.00	49.95	FKM	WPS-3693
W10045L507	45.00	56.30	5.70	8.00	50.09	PU	WPH-901
W100451117	45.00	57.00	5.50	7.50	50.40	NBR	WPS-2322
W100451125	45.00	57.00	5.00	7.00	50.40	NBR	WPS-3298
W100456727	45.00	57.00	5.00	8.00	50.40	FKM	WPS-4242
W100451131	45.00	57.00	5.00	8.00	50.40	NBR	WPS-4735
W100451126	45.00	57.00	8.25	14.25	50.40	NBR	WPS-3370
W100451120	45.00	58.00	5.00	7.00	50.85	NBR	WPS-2577
W100456733	45.00	58.00	5.00	8.00	50.85	FKM	WPS-4722
W100456724	45.00	60.00	3.40	5.00	51.75	FKM	WPS-3855
W100451135	45.00	60.00	5.00	7.50	51.75	NBR	WPS-5171
W100455917	45.00	60.00	7.00	10.00	51.75	PU	WPH-1033
WRE0451102	45.00	65.00	4.00	10.00	54.00	NBR	WPS-1689
W100466702	46.00	56.00	7.00	10.00	50.50	FKM	WPS-5340
W10047L501	47.60	54.60	2.50	4.50	50.75	PU	WPH-802
W100476701	47.62	57.15	4.76	7.62	51.91	FKM	WPS-3592
W100485902	48.00	56.00	5.00	7.00	51.60	PU	WPH-1806
W100481104	48.00	65.00	10.00	14.00	55.65	NBR	WPS-4071
W100480801	48.00	68.00	4.80	14.00	57.00	NBR	WPS-4394
W100501116	50.00	56.00	5.00	7.00	52.70	NBR	WPS-2251
W100506726	50.00	56.00	6.50	8.50	52.70	FKM	WPS-4686
W100501128	50.00	58.00	2.00	7.00	53.60	NBR	WPS-2558
W100501144	50.00	58.00	3.00	5.00	53.60	NBR	WPS-4549
W100506712	50.00	58.00	4.80	6.00	53.60	FKM	WPS-3195
W100506708	50.00	58.00	4.00	7.00	53.60	FKM	WPS-2177
W100501103	50.00	58.00	5.00	6.50	53.60	NBR	WPS-4135
W100506605	50.00	58.00	5.00	7.00	53.60	FKM	WPS-3798
W100501104	**50.00**	**58.00**	**5.00**	**7.00**	**53.60**	**NBR**	**WPS-2007**
W10050L510	50.00	58.00	5.00	7.00	53.60	PU	WPH-1643
W100501138	50.00	58.00	5.00	7.50	53.60	NBR	WPS-3921
W100506710	50.00	58.00	5.00	8.00	53.60	FKM	WPS-3023
W100506721	50.00	58.00	6.00	8.00	53.60	FKM	WPS-4486
W100506725	50.00	58.00	6.00	9.00	53.60	FKM	WPS-4603
W100501107	**50.00**	**58.60**	**5.00**	**7.00**	**53.87**	**NBR**	**WPS-872**
W10050L508	50.00	58.60	5.00	7.00	53.87	PU	WPH-1533
W100501130	50.00	59.00	5.00	7.00	54.05	NBR	WPS-2754
W100501134	50.00	59.00	6.00	8.00	54.05	NBR	WPS-3160
W100506730	50.00	59.00	6.00	8.00	54.05	FKM	WPS-5169
W100506709	50.00	60.00	10.00	12.00	54.50	FKM	WPS-2188
W100506714	50.00	60.00	3.00	8.00	54.50	FKM	WPS-3419
W100506734	50.00	60.00	4.50	6.00	54.50	FKM	WPS-5603

Bold sizes are readily available in stock.
Other materials are available on request.

W10

Medium Duty Wiper Seal

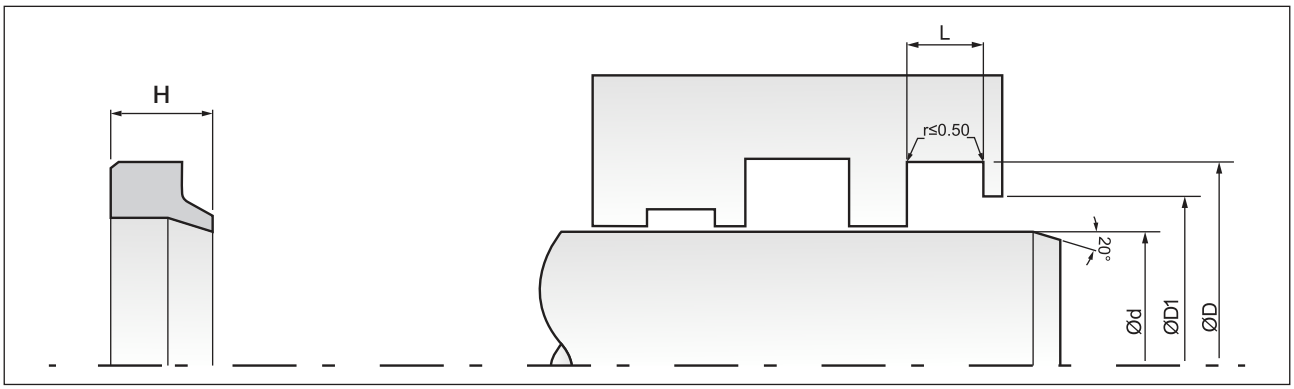

Part No.	d (f8)	D (H9)	L (+0.2)	H	D1 (H9)	Matl.	Mould No.
W100506717	50.00	60.00	4.70	6.70	54.50	FKM	WPS-3559
W100501126	50.00	60.00	4.70	7.00	54.50	NBR	WPS-2503
W100506722	50.00	60.00	4.00	6.00	54.50	FKM	WPS-4289
W100506723	50.00	60.00	5.30	8.00	54.50	FKM	WPS-4344
W100501110	**50.00**	**60.00**	**5.00**	**7.00**	**54.50**	**NBR**	**WPS-4328**
W100506701	50.00	60.00	5.00	7.00	54.50	FKM	WPS-341
W10050L503	50.00	60.00	5.00	7.00	54.50	PU	WPH-867
W100501113	**50.00**	**60.00**	**5.00**	**8.00**	**54.50**	**NBR**	**WPS-5631**
W100505910	50.00	60.00	5.00	8.00	54.50	PU	WPH-1297
W100501113	50.00	60.00	5.00	8.00	54.50	NBR	WPS-171
W100506720	50.00	60.00	5.00	9.00	54.50	FKM	WPS-3805
W100501139	50.00	60.00	6.00	7.00	54.50	NBR	WPS-4134
W100506716	50.00	60.00	6.00	8.00	54.50	FKM	WPS-3491
W100501112	**50.00**	**60.00**	**7.00**	**10.00**	**54.50**	**NBR**	**WPS-5299**
W10050L509	50.00	60.00	7.00	10.00	54.50	PU	WPH-1624
W100501146	50.00	60.00	7.00	11.00	54.50	NBR	WPS-5046
W10050L504	50.00	60.00	7.00	12.00	54.50	PU	WPH-876
W100506729	50.00	60.60	5.00	7.00	54.77	FKM	WPS-5044
W100506715	50.00	62.00	2.50	7.00	55.40	FKM	WPS-3426
W100501147	50.00	62.00	5.00	7.00	55.40	NBR	WPS-5294
W100506718	50.00	62.00	7.00	10.00	55.40	FKM	WPS-3721
W100501132	50.00	62.00	8.00	10.00	55.40	NBR	WPS-2967
W100506727	50.00	63.00	5.00	11.00	55.85	FKM	WPS-4909
W10050L507	50.00	63.00	6.00	9.00	55.85	PU	WPH-1390
W100501131	50.00	64.00	7.00	10.00	56.30	NBR	WPS-2772
W100501127	50.00	65.00	7.00	14.00	56.75	NBR	WPS-2560
W100506719	50.00	68.00	5.00	8.00	58.10	FKM	WPS-3723
W100501141	50.00	68.00	6.00	9.00	58.10	NBR	WPS-4305
W100501145	50.00	70.00	7.00	12.00	59.00	NBR	WPS-4893
W10050L502	50.00	70.00	7.00	12.00	59.00	PU	WPH-628
W100506728	50.80	57.78	2.54	5.08	53.94	FKM	WPS-4976
W100501133	50.80	58.42	2.54	3.81	54.23	NBR	WPS-3107
W100501114	50.80	58.50	2.60	4.76	54.27	NBR	WPS-284
W100506724	50.80	58.50	2.60	4.76	54.27	FKM	WPS-4370
W100501129	50.80	59.00	3.60	4.50	54.49	NBR	WPS-2641
W100501137	50.80	60.00	5.50	8.00	54.94	NBR	WPS-3778
W100506713	50.80	60.30	4.60	7.10	55.08	FKM	WPS-3413
W100501140	50.80	63.30	6.00	8.00	56.43	NBR	WPS-4304
W100501148	50.80	63.50	3.00	9.30	56.52	NBR	WPS-5609
W100501125	50.80	63.50	6.35	7.93	56.52	NBR	WPS-2282
W100511001	51.50	59.00	2.30	4.00	54.88	NBR	WPS-3620
W100521102	52.00	60.60	5.30	7.00	55.87	NBR	WPS-2397
W10053C401	53.92	61.64	2.64	4.74	57.39	XNBR	WPS-4234
W100540901	54.00	64.00	5.00	7.30	58.50	NBR	WPS-5327
W100546601	54.00	65.00	5.00	7.00	58.95	FKM	WPS-2682
W100551107	55.00	62.00	7.00	10.00	58.15	NBR	WPS-3064
W100551105	55.00	63.00	4.00	7.00	58.60	NBR	WPS-2347
W100551106	55.00	63.00	5.00	7.00	58.60	NBR	WPS-2436
W100551104	55.00	63.60	5.00	7.00	58.87	NBR	WPS-2126
W100556707	55.00	63.60	5.00	7.00	58.87	FKM	WPS-4507
W100556702	55.00	65.00	5.00	7.00	59.50	FKM	WPS-835
W100551103	**55.00**	**65.00**	**5.00**	**7.00**	**59.50**	**NBR**	**WPS-1983**

Part No.	d (f8)	D (H9)	L (+0.2)	H	D1 (H9)	Matl.	Mould No.
W100555902	55.00	65.00	5.00	7.00	59.50	PU	WPH-1161
W10055L502	55.00	65.00	6.00	8.50	59.50	PU	WPH-791
W100556708	55.00	66.00	5.30	7.00	59.95	FKM	WPS-4569
W10055L501	55.00	66.00	5.00	7.00	59.95	PU	WPH-739
W100556706	55.00	68.65	6.00	12.00	61.14	FKM	WPS-4449
W100551108	55.00	70.00	4.00	7.00	61.75	NBR	WPS-3339
W100556705	55.00	70.00	5.00	7.00	61.75	FKM	WPS-3974
W100566802	56.00	63.00	6.00	10.00	59.15	FKM	WPS-5001
W100566722	56.00	64.00	5.50	7.00	59.60	FKM	WPS-4866
W100566712	56.00	64.00	6.00	8.00	59.60	FKM	WPS-2529
W100566708	56.00	64.00	6.00	9.00	59.60	FKM	WPS-2147
W100566721	56.00	64.60	5.50	7.00	59.87	FKM	WPS-4831
W100566717	56.00	64.60	5.00	7.00	59.87	FKM	WPS-4283
W100561101	56.00	64.60	5.00	7.00	59.87	NBR	WPS-2125
W100566611	56.00	65.00	4.70	8.00	60.05	FKM	WPS-3645
W100566716	56.00	65.00	4.80	8.00	60.05	FKM	WPS-3981
W100566715	56.00	65.00	6.00	8.80	60.05	FKM	WPS-3956
W100566709	56.00	65.40	6.00	8.10	60.23	FKM	WPS-2388
W100561110	56.00	66.00	5.70	8.00	60.50	NBR	WPS-2320
W100561117	56.00	66.00	5.00	6.50	60.50	NBR	WPS-2564
W10056L502	56.00	66.00	5.00	7.00	60.50	PU	WPH-224
W100566723	56.00	66.00	5.00	7.00	60.50	FKM	WPS-5369
W100561103	**56.00**	**66.00**	**5.00**	**7.00**	**60.50**	**NBR**	**WPS-5629**
W100566714	56.00	66.00	6.00	9.30	60.50	FKM	WPS-3248
W100566711	56.00	66.00	7.00	10.00	60.50	FKM	WPS-2459
W100561116	56.00	66.00	7.00	10.00	60.50	NBR	WPS-2440
W100566713	56.00	66.30	5.00	7.00	60.64	FKM	WPS-3246
W100566801	56.00	66.60	4.30	6.00	60.77	FKM	WPS-2634
W10056L503	56.00	66.60	5.00	7.00	60.77	PU	WPH-728
W100566707	56.00	66.60	5.00	7.00	60.77	FKM	WPS-3553
W100561107	**56.00**	**66.60**	**5.00**	**7.00**	**60.77**	**NBR**	**WPS-766**
W100566610	56.00	67.00	2.70	8.00	60.95	FKM	WPS-2338
W100566720	56.00	68.00	6.00	10.00	61.40	FKM	WPS-4753
W100566719	56.00	68.00	6.00	8.00	61.40	FKM	WPS-4749
W100561102	56.00	68.70	5.30	9.00	61.72	NBR	WPS-3754
W100576702	57.00	64.00	3.50	4.50	60.15	FKM	WPS-4813
W100571104	57.00	65.00	3.00	6.00	60.60	NBR	WPS-2696
W100576701	57.15	65.08	2.78	4.76	60.72	FKM	WPS-4502
W100571105	57.15	67.26	5.54	8.50	61.70	NBR	WPS-3642
W100578701	57.15	69.85	6.20	10.00	62.87	PU	WPH-1273
W100576703	57.15	69.85	6.30	8.00	62.87	FKM	WPS-5322
W100581103	58.00	66.00	4.00	7.00	61.60	NBR	WPS-4354
W100586702	58.00	74.00	6.50	13.50	65.20	FKM	WPS-2009
W100581104	58.00	74.00	7.00	14.00	65.20	NBR	WPS-4928
W100586703	58.40	79.00	6.00	12.50	67.67	FKM	WPS-4868
W10060L505	60.00	68.00	5.50	7.00	63.60	PU	WPH-674
W10060L509	60.00	68.00	5.00	7.00	63.60	PU	WPH-1532
W100601103	**60.00**	**68.00**	**5.00**	**7.00**	**63.60**	**NBR**	**WPS-753**
W100606708	60.00	68.00	7.00	10.00	63.60	FKM	WPS-3384
W100606712	60.00	68.60	5.00	7.00	63.87	FKM	WPS-2060
W100601117	60.00	68.60	5.00	7.00	63.87	NBR	WPS-2136
W100605913	60.00	70.00	3.00	5.00	64.50	PU	WPH-1693

Bold sizes are readily available in stock.
Other materials are available on request.

W10

Medium Duty Wiper Seal

MAX SPARE LIMITED
QUALITY. PRECISION. SPEED.

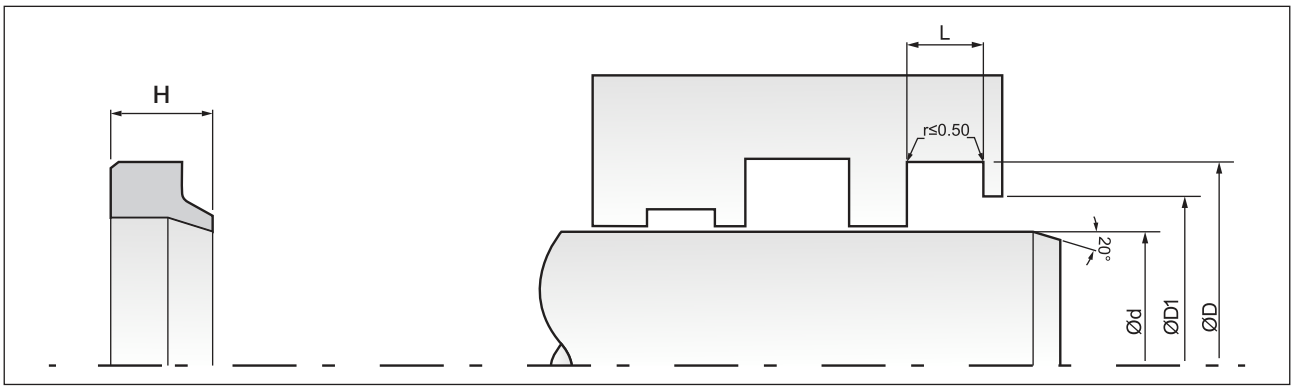

Part No.	d (f8)	D (H9)	L (+0.2)	H	D1 (H9)	Matl.	Mould No.
W10060L508	60.00	70.00	5.00	7.00	64.50	PU	WPH-1516
W100601114	**60.00**	**70.00**	**5.00**	**7.00**	**64.50**	**NBR**	**WPS-570**
W100601119	60.00	70.00	5.00	8.00	64.50	NBR	WPS-3751
W100606709	60.00	70.00	6.00	9.00	64.50	FKM	WPS-4463
W10060L506	60.00	70.00	7.00	12.00	64.50	PU	WPH-877
W10060L504	60.00	72.00	5.50	10.00	65.40	PU	WPH-676
W100605911	60.00	72.00	7.00	10.00	65.40	PU	WPH-1165
W100606710	60.00	75.00	5.00	8.00	66.75	FKM	WPS-4511
W100601118	60.00	75.00	7.00	13.00	66.75	NBR	WPS-3511
W100600801	60.00	81.00	5.80	14.00	69.45	NBR	WPS-4395
W100621102	62.00	72.00	7.00	10.00	66.50	NBR	WPS-3030
W100636720	63.00	71.00	5.00	7.00	66.60	FKM	WPS-5137
W100636715	63.00	71.00	6.00	9.00	66.60	FKM	WPS-4292
W100636501	63.00	72.00	5.00	8.00	67.05	FKM	WPS-3869
W100636722	63.00	72.00	6.00	8.00	67.05	FKM	WPS-5453
W100636606	63.00	73.00	5.00	7.00	67.50	FKM	WPS-5135
W10063L503	63.00	73.00	5.00	7.00	67.50	PU	WPH-1535
W100631102	**63.00**	**73.00**	**5.00**	**7.00**	**67.50**	**NBR**	**WPS-590**
W100636705	63.00	73.00	5.00	7.00	67.50	FKM	WPS-5677
W100631115	63.00	73.00	5.00	7.50	67.50	NBR	WPS-2624
W100631107	**63.00**	**73.00**	**6.00**	**10.00**	**67.50**	**NBR**	**WPS-1995**
W100631116	63.00	73.00	6.00	8.00	67.50	NBR	WPS-2986
W100636717	63.00	73.00	6.00	9.50	67.50	FKM	WPS-4968
W100636719	63.00	73.00	7.00	10.00	67.50	FKM	WPS-5082
W100631121	63.00	73.00	7.00	9.00	67.50	NBR	WPS-5214
W100638901	63.00	73.00	7.00	9.00	67.50	PU	WPH-1325
W100636716	63.00	73.60	5.00	7.00	67.77	FKM	WPS-4593
W100636710	63.00	74.80	5.00	7.00	68.31	FKM	WPS-3283
W100631002	63.00	75.00	6.30	9.50	68.40	NBR	WPS-2395
W100636607	63.00	75.00	7.20	11.20	68.40	FKM	WPS-5393
W100631120	63.00	76.00	4.76	6.50	68.85	NBR	WPS-5172
W100636712	63.00	83.00	8.00	15.00	72.00	FKM	WPS-3633
W10063L502	63.50	71.00	2.50	4.00	66.88	PU	WPH-912
W10063L501	63.50	71.00	2.50	4.60	66.88	PU	WPH-689
W100636718	63.50	71.12	2.54	5.08	66.93	FKM	WPS-4975
W100631003	63.50	71.14	2.54	4.31	66.94	NBR	WPS-4092
W100635912	63.50	71.44	2.70	3.97	67.07	PU	WPH-683
W100631114	63.50	73.00	4.80	7.10	67.78	NBR	WPS-2382
W100635913	63.50	73.02	6.30	8.00	67.78	PU	WPH-1541
W100636701	63.50	73.20	7.00	10.00	67.87	FKM	WPS-962
W100631117	63.50	75.00	7.00	10.00	68.68	NBR	WPS-3075
W100636713	63.50	76.20	6.80	9.00	69.22	FKM	WPS-3730
W100636708	63.50	76.20	6.00	8.00	69.22	FKM	WPS-2105
W10063L504	63.50	76.20	6.00	9.53	69.22	PU	WPH-1961
W100636721	63.50	77.00	6.50	9.00	69.58	FKM	WPS-5330
W100636714	63.50	79.00	7.00	10.00	70.48	FKM	WPS-4079
W100641101	64.00	71.00	4.00	7.00	67.15	NBR	WPS-3090
W100655906	65.00	72.00	2.70	6.50	68.15	PU	WPH-1234
W100651109	65.00	72.00	5.00	9.00	68.15	NBR	WPS-2527
W10065L503	65.00	73.00	5.00	7.00	68.60	PU	WPH-1644
W100651112	65.00	73.00	5.00	8.00	68.60	NBR	WPS-4306
W100651107	65.00	73.60	5.00	7.00	68.87	NBR	WPS-2124

Part No.	d (f8)	D (H9)	L (+0.2)	H	D1 (H9)	Matl.	Mould No.
W100651101	**65.00**	**75.00**	**5.00**	**7.00**	**69.50**	**NBR**	**WPS-3043**
W10065L501	65.00	75.00	5.00	7.00	69.50	PU	WPH-1531
W10065L502	65.00	75.00	5.00	8.00	69.50	PU	WPH-851
W100651111	65.00	75.00	5.00	8.00	69.50	NBR	WPS-4307
W100651104	65.00	75.00	7.00	10.00	69.50	NBR	WPS-3919
W100655902	65.00	75.00	7.00	10.00	69.50	PU	WPH-1164
W100656705	65.00	75.00	7.00	10.00	69.50	FKM	WPS-3281
W100651108	65.00	75.60	5.00	7.00	69.77	NBR	WPS-2139
W100656704	65.00	75.60	5.00	7.00	69.77	FKM	WPS-1806
W10065L504	65.00	76.00	6.00	10.00	69.95	PU	WPH-1781
W10065L505	65.00	77.00	7.00	12.00	70.40	PU	WPH-1960
W100651110	65.00	80.00	5.00	10.00	71.75	NBR	WPS-2666
W100666702	66.67	76.20	3.17	5.35	70.96	FKM	WPS-4503
W10068L501	68.00	75.60	5.00	7.00	71.42	PU	WPH-787
W100681101	68.00	78.00	5.00	8.00	72.50	NBR	WPS-2642
W100696705	69.50	85.00	9.00	12.00	76.48	FKM	WPS-4276
W100691105	69.85	79.30	3.50	3.90	74.10	NBR	WPS-2350
W100696702	69.85	82.55	4.00	7.00	75.57	FKM	WPS-3169
W100695906	69.85	82.55	6.35	10.03	75.57	PU	WPH-1425
W100696703	69.85	82.55	7.00	12.00	75.57	FKM	WPS-4039
W100691106	69.85	82.60	7.00	10.00	75.59	NBR	WPS-4309
W100701118	70.00	75.00	4.00	7.00	72.25	NBR	WPS-2854
W100806726	70.00	77.00	4.00	7.00	73.15	FKM	WPS-4218
W100701102	70.00	78.00	3.60	7.00	73.60	NBR	WPS-2491
W100705919	70.00	78.00	5.50	7.00	73.60	PU	WPH-1053
W10070L503	70.00	78.00	5.00	7.00	73.60	PU	WPH-366
W100706605	70.00	78.00	5.00	7.00	73.60	FKM	WPS-1381
W100701107	70.00	78.00	5.00	7.00	73.60	NBR	WPS-4326
W100701126	70.00	78.00	6.00	8.00	73.60	NBR	WPS-4512
W100705L509	70.00	78.00	6.00	8.00	73.60	PU	WPH-1015
W100706610	70.00	78.00	7.00	10.00	73.60	NBR	WPS-1963
W100706731	70.00	78.60	5.30	7.00	73.87	FKM	WPS-4810
W100701109	70.00	78.60	5.00	7.00	73.87	NBR	WPS-809
W100706712	70.00	78.70	5.00	8.00	73.92	FKM	WPS-2385
W100706728	70.00	79.50	6.00	8.00	74.28	FKM	WPS-4572
W100701131	70.00	80.00	5.60	8.00	74.50	NBR	WPS-4856
W100701103	**70.00**	**80.00**	**5.00**	**7.00**	**74.50**	**NBR**	**WPS-2294**
W100706705	70.00	80.00	5.00	7.00	74.50	FKM	WPS-1536
W10070L504	70.00	80.00	5.00	7.00	74.50	PU	WPH-696
W100706713	70.00	80.00	5.00	8.00	74.50	FKM	WPS-2845
W100701121	70.00	80.00	5.00	8.00	74.50	NBR	WPS-4101
W100706607	70.00	80.00	6.00	8.00	74.50	FKM	WPS-3209
W100706609	70.00	80.00	6.50	10.00	74.50	FKM	WPS-4514
W100701123	**70.00**	**80.00**	**6.00**	**8.00**	**74.50**	**NBR**	**WPS-4132**
W10070L502	70.00	80.00	6.00	8.00	74.50	PU	WPH-654
W100706730	70.00	80.00	6.00	8.30	74.50	FKM	WPS-4691
W100701117	70.00	80.00	6.00	9.00	74.50	NBR	WPS-2346
W100706708	70.00	80.00	7.00	10.00	74.50	FKM	WPS-3842
W100701130	70.00	80.00	8.00	12.00	74.50	NBR	WPS-4807
W100701128	70.00	80.20	5.90	9.00	74.59	NBR	WPS-4588
W100706701	70.00	80.60	5.00	7.00	74.77	FKM	WPS-1145
W100701104	**70.00**	**80.60**	**5.00**	**7.00**	**74.77**	**NBR**	**WPS-2156**

Bold sizes are readily available in stock.
Other materials are available on request.

W10

Medium Duty Wiper Seal

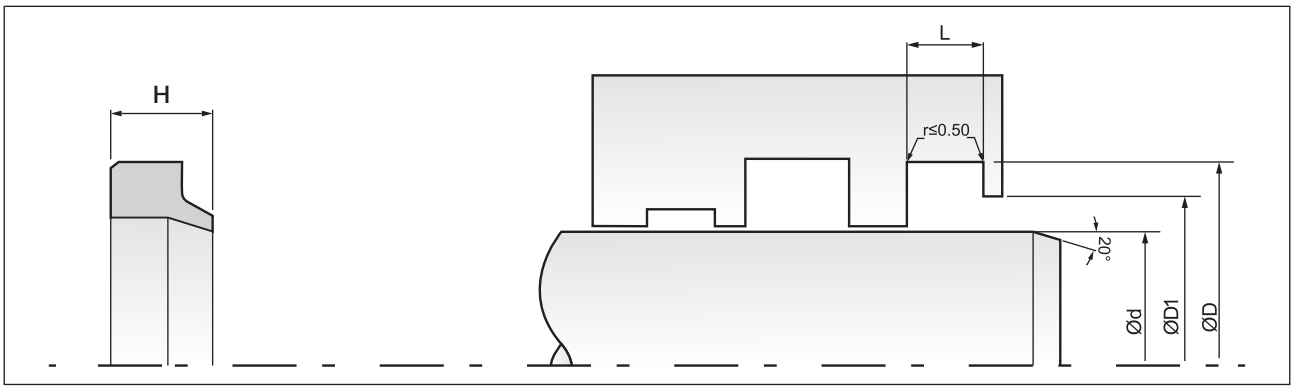

Part No.	d (f8)	D (H9)	L (+0.2)	H	D1 (H9)	Matl.	Mould No.
W100706725	70.00	81.00	5.00	7.00	74.95	FKM	WPS-388
W10070L508	70.00	81.50	4.00	6.00	75.18	PU	WPH-1511
W100706720	70.00	81.50	7.00	11.00	75.18	FKM	WPS-3552
W100706608	70.00	82.00	5.00	8.00	75.40	FKM	WPS-4167
W100701136	70.00	82.00	6.00	9.00	75.40	NBR	WPS-5673
W100706717	70.00	82.00	6.00	9.50	75.40	FKM	WPS-3033
W100706722	70.00	82.00	7.00	10.00	75.40	FKM	WPS-3800
W100705920	70.00	82.60	5.80	8.00	75.67	PU	WPH-1124
W100701134	70.00	82.60	5.00	7.00	75.67	NBR	WPS-5445
W100701120	70.00	82.60	5.00	9.40	75.67	NBR	WPS-3757
W100701116	70.00	82.60	7.00	10.00	75.67	NBR	WPS-2123
W100706716	70.00	84.00	5.50	10.60	76.30	FKM	WPS-2994
W10070L505	70.00	84.00	6.00	12.00	76.30	PU	WPH-906
W100700701	70.00	85.00	11.60	13.20	76.75	NBR	WPS-3186
W100701125	70.00	85.00	6.00	9.00	76.75	NBR	WPS-4327
W100701135	70.00	85.00	7.00	9.00	76.75	NBR	WPS-5504
W100706732	70.00	86.00	5.30	7.00	77.20	FKM	WPS-5037
W100701129	70.00	87.80	6.30	8.00	78.01	NBR	WPS-4705
W100701012	70.00	95.00	12.00	16.00	81.25	NBR	WPS-4284
W100711103	71.00	81.00	6.00	8.00	75.50	NBR	WPS-3953
W100710801	71.45	83.34	3.96	7.92	76.80	NBR	WPS-2698
W100721101	72.00	82.00	7.00	10.00	76.50	NBR	WPS-2727
W10072L401	72.00	84.00	7.00	12.00	77.40	PU	WPH-1805
W100731101	73.00	83.60	5.00	7.00	77.77	NBR	WPS-3538
W100731102	73.02	82.55	3.00	5.00	77.31	NBR	WPS-3864
W100731001	73.02	85.72	7.49	10.03	78.74	NBR	WPS-3361
W100755903	75.00	82.00	3.50	5.50	78.15	PU	WPH-1278
W100756705	75.00	82.00	5.00	8.00	78.15	FKM	WPS-4530
W10075L503	75.00	83.00	5.00	7.00	78.60	PU	WPH-1745
W100751104	**75.00**	**83.60**	**5.00**	**7.00**	**78.87**	**NBR**	**WPS-2137**
W10075L502	75.00	85.00	5.00	8.00	79.50	PU	WPH-852
W100756704	75.00	85.00	6.00	8.00	79.50	FKM	WPS-4159
W100751109	75.00	85.00	6.00	8.00	79.50	NBR	WPS-4133
W100751106	75.00	85.00	7.00	10.00	79.50	NBR	WPS-4261
W100756601	75.00	85.00	7.00	10.00	79.50	FKM	WPS-3242
W100751107	75.00	87.00	4.00	8.00	80.40	NBR	WPS-3297
W10075L504	75.00	87.00	7.00	12.00	80.40	PU	WPH-1959
W100751101	**75.00**	**87.20**	**7.00**	**12.00**	**80.49**	**NBR**	**WPS-5298**
W100751108	75.00	88.00	6.00	9.50	80.85	NBR	WPS-3756
W10075L501	75.00	90.00	6.00	12.00	81.75	PU	WPH-839
W100756703	75.00	100.00	7.00	12.00	86.25	FKM	WPS-3364
W100751110	75.00	120.00	7.00	10.00	95.25	NBR	WPS-4508
W100761108	76.00	88.00	6.00	9.00	81.40	NBR	WPS-4311
W100766707	76.00	90.00	5.00	6.00	82.30	FKM	WPS-5103
W100766704	76.12	85.44	3.02	5.35	80.31	FKM	WPS-4454
W100761109	76.20	83.90	7.00	10.00	79.67	NBR	WPS-4310
W100766706	76.20	85.09	2.79	5.08	80.20	FKM	WPS-4977
W100761111	76.20	85.50	5.00	10.00	80.39	NBR	WPS-5653
W100766705	76.20	85.67	3.00	5.00	80.46	FKM	WPS-4461
W100761105	76.20	85.70	4.80	7.10	80.48	NBR	WPS-2393
W10761106	76.20	86.00	6.00	12.00	80.61	NBR	WPS-2504
W100766703	76.20	86.30	7.00	10.50	80.75	FKM	WPS-2680

Part No.	d (f8)	D (H9)	L (+0.2)	H	D1 (H9)	Matl.	Mould No.
W100761107	76.20	88.90	3.17	9.52	81.92	NBR	WPS-3523
W100761110	76.20	88.90	6.00	8.00	81.92	NBR	WPS-5443
W100761104	76.50	88.70	7.00	10.00	81.99	NBR	WPS-2122
W100771101	77.00	87.00	6.00	8.00	81.50	NBR	WPS-3273
W100785901	78.00	88.00	4.00	7.50	82.50	PU	WPH-722
W100781101	78.00	90.00	8.00	12.00	83.40	NBR	WPS-3619
WRA0786702	78.99	89.99	8.00	16.50	83.94	FKM	WPS-4300
W100806709	80.00	87.50	4.00	7.00	83.38	FKM	WPS-2186
W100806719	80.00	88.00	4.00	6.00	83.60	FKM	WPS-4827
W100806723	80.00	88.00	4.00	8.00	83.60	FKM	WPS-5331
W100801128	80.00	88.00	5.00	7.00	83.60	NBR	WPS-5444
W100805913	80.00	88.00	5.00	7.00	83.60	PU	WPH-1259
W100801103	80.00	88.60	5.00	7.00	83.87	NBR	WPS-2140
W100806713	80.00	89.00	8.00	12.00	84.05	FKM	WPS-3414
W100801119	80.00	90.00	3.00	5.00	84.50	NBR	WPS-2330
W100806720	80.00	90.00	5.70	8.00	84.50	FKM	WPS-4842
W10080L505	80.00	90.00	5.70	8.70	84.50	PU	WPH-1619
W100801120	80.00	90.00	5.00	10.00	84.50	NBR	WPS-2563
W10080L502	80.00	90.00	5.00	7.00	84.50	PU	WPH-774
W100806721	80.00	90.00	6.30	9.30	84.50	FKM	WPS-5072
W10080L501	80.00	90.00	6.00	8.00	84.50	PU	WPH-606
W100806711	80.00	90.00	6.00	8.00	84.50	FKM	WPS-2541
W100801107	80.00	90.00	6.00	8.00	84.50	NBR	WPS-1625
W100801110	**80.00**	**90.00**	**7.00**	**10.00**	**84.50**	**NBR**	**WPS-1997**
W100806710	80.00	90.00	7.00	10.00	84.50	FKM	WPS-801
W100806715	80.00	90.60	5.30	7.00	84.77	FKM	WPS-3969
W100806716	80.00	91.50	7.50	10.00	85.18	FKM	WPS-4165
W100808701	80.00	92.00	6.60	10.50	85.40	PU	WPH-1663
W100801101	80.00	92.00	7.00	12.00	85.40	NBR	WPS-4323
W100806704	80.00	92.00	7.00	12.00	85.40	FKM	WPS-432
W100806722	80.00	92.20	7.20	12.00	85.49	FKM	WPS-5210
W10080L503	80.00	92.20	7.00	12.00	85.49	PU	WPH-1323
W100806714	80.00	92.20	7.00	12.00	85.49	FKM	WPS-3641
W100801108	**80.00**	**92.20**	**7.00**	**12.00**	**85.49**	**NBR**	**WPS-768**
W100801117	80.00	92.60	7.00	10.00	85.67	NBR	WPS-2121
W100801118	80.00	95.00	8.00	15.00	86.75	NBR	WPS-2329
W100801125	80.00	96.00	8.00	12.00	87.20	NBR	WPS-4476
W100801121	80.00	100.00	7.00	10.00	89.00	NBR	WPS-3152
W100801126	80.00	130.00	7.00	10.00	102.50	NBR	WPS-4509
W100821102	82.55	92.00	3.50	5.30	86.80	NBR	WPS-2643
W100856704	85.00	93.00	5.00	7.00	88.60	FKM	WPS-3366
W100851102	85.00	94.00	4.00	7.00	89.05	NBR	WPS-1455
W100856707	85.00	95.00	4.00	7.00	89.50	FKM	WPS-3092
W10085L502	85.00	95.00	5.00	8.00	89.50	PU	WPH-853
W10085L504	85.00	95.00	6.00	8.00	89.50	PU	WPH-1433
W100851116	85.00	95.00	6.00	8.00	89.50	NBR	WPS-5442
W100851105	**85.00**	**95.60**	**7.00**	**12.00**	**89.50**	**NBR**	**WPS-1579**
W100851113	85.00	95.00	8.00	10.00	89.50	NBR	WPS-4312
W1008511112	85.00	96.00	3.00	5.00	89.95	NBR	WPS-3480
W10085L503	85.00	97.00	5.50	8.00	90.40	PU	WPH-1304
W100856705	85.00	97.00	7.00	12.00	90.40	FKM	WPS-2860
W100851111	85.00	97.00	7.00	12.00	90.40	NBR	WPS-2976

Bold sizes are readily available in stock.
Other materials are available on request.

W10

Medium Duty Wiper Seal

MAX SPARE LIMITED
QUALITY. PRECISION. SPEED.

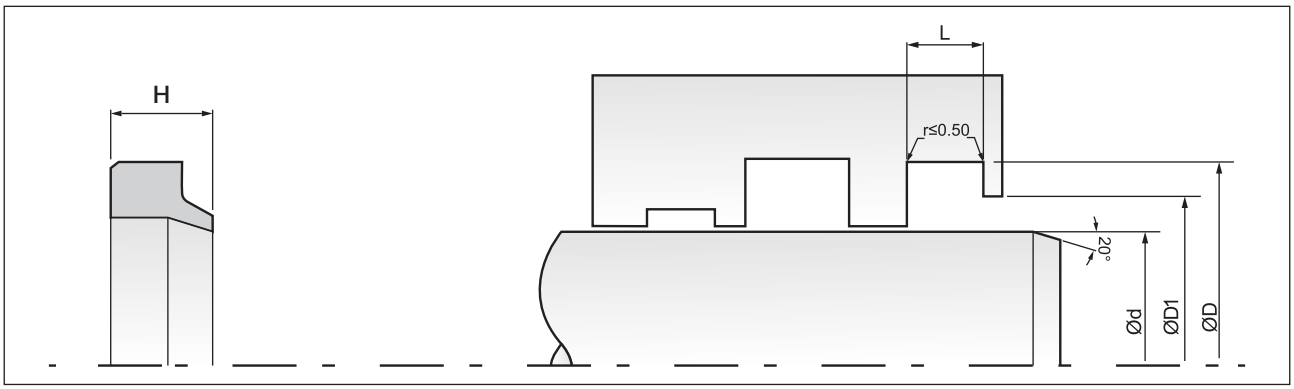

Part No.	d (f8)	D (H9)	L (+0.2)	H	D1 (H9)	Matl.	Mould No.
W100851115	85.00	97.20	7.10	12.00	90.49	NBR	WPS-4634
W100851114	85.00	97.20	7.00	12.00	90.49	NBR	WPS-4313
W100856708	85.00	101.00	7.60	11.20	92.20	FKM	WPS-3047
W100861001	86.40	106.40	7.80	15.75	95.40	NBR	WPS-2328
W100871001	87.00	95.70	6.90	14.00	90.92	NBR	WPS-3597
W10088L503	88.00	95.60	5.00	7.00	91.42	PU	WPH-860
W100881111	88.90	98.42	4.70	8.00	93.18	NBR	WPS-4089
W100886602	88.90	101.60	3.00	6.35	94.62	FKM	WPS-3206
W100881102	88.90	101.60	6.14	9.52	94.62	NBR	WPS-2216
W100881007	88.90	101.60	6.35	10.03	94.62	NBR	WPS-3362
W100885909	88.90	101.60	6.35	10.03	94.62	PU	WPH-1426
W100886603	88.90	101.60	6.35	9.52	94.62	FKM	WPS-3816
W10088L504	88.90	102.28	6.07	9.52	94.92	PU	WPH-1843
W100880801	88.90	107.23	7.95	15.87	97.15	NBR	WPS-2929
W10090120	90.00	98.00	5.30	7.00	93.60	NBR	WPS-5202
W10090L506	90.00	98.00	5.00	7.00	93.60	PU	WPH-1788
W10090L507	90.00	98.00	5.00	8.00	93.60	PU	WPH-1834
W100906609	90.00	98.00	6.00	8.00	93.60	FKM	WPS-4785
W100905913	90.00	98.60	5.00	7.00	93.87	PU	WPH-678
W100901120	90.00	99.00	6.00	8.00	94.05	NBR	WPS-3218
W100906724	90.00	99.00	6.00	8.00	94.05	FKM	WPS-4887
W100901112	90.00	100.00	3.00	5.00	94.50	NBR	WPS-2755
W100901124	90.00	100.00	5.60	7.70	94.50	NBR	WPS-4857
W100901123	90.00	100.00	5.60	8.00	94.50	NBR	WPS-4858
W100901111	90.00	100.00	5.00	7.00	94.50	NBR	WPS-628
W100906726	90.00	100.00	6.30	10.00	94.50	FKM	WPS-2404
W100906728	90.00	100.00	6.50	12.50	94.50	FKM	WPS-5359
W100906713	90.00	100.00	6.00	10.00	94.50	FKM	WPS-2998
W10090R301	90.00	100.00	6.00	8.00	94.50	PU	WPH-1588
W100901117	90.00	100.00	6.00	9.50	94.50	NBR	WPS-2462
W100906711	90.00	100.00	8.00	10.00	94.50	FKM	WPS-2304
W100906718	90.00	100.20	6.00	8.00	94.59	FKM	WPS-4382
W100901114	**90.00**	**100.20**	**7.00**	**12.00**	**94.59**	**NBR**	**WPS-2428**
W10090L502	90.00	100.20	7.00	12.00	94.59	PU	WPH-1334
W100906729	90.00	101.00	6.00	8.00	94.95	FKM	WPS-5416
W10090119	90.00	102.00	7.50	10.00	95.40	NBR	WPS-2587
W100906705	90.00	102.00	7.00	12.00	95.40	FKM	WPS-572
W10090L508	90.00	102.00	7.00	12.00	95.40	PU	WPH-1958
W100901122	90.00	102.00	8.00	12.00	95.40	NBR	WPS-4066
W10090L501	90.00	102.20	7.00	12.00	95.49	PU	WPH-308
W100905916	90.00	102.20	7.20	12.00	95.49	PU	WPH-1423
W100906723	90.00	102.20	7.20	12.00	95.49	FKM	WPS-4770
W100901116	90.00	102.20	7.00	10.00	95.49	NBR	WPS-2120
W100901101	**90.00**	**102.20**	**7.00**	**12.00**	**95.49**	**NBR**	**WPS-1269**
W10090L505	90.00	102.50	5.00	10.00	95.63	PU	WPH-1527
W100906727	90.00	103.50	6.80	12.80	96.08	FKM	WPS-5345
W100905914	90.00	104.00	5.50	12.00	96.30	PU	WPH-1378
W100901125	90.00	105.00	5.00	7.00	96.75	NBR	WPS-5617
W100906715	90.00	105.00	6.00	8.00	96.75	FKM	WPS-3599
W100901113	**90.00**	**105.00**	**7.00**	**10.00**	**96.75**	**NBR**	**WPS-1999**
W100906712	90.00	105.00	8.00	13.00	96.75	FKM	WPS-2711
W100901115	**90.00**	**107.00**	**7.00**	**12.20**	**97.65**	**NBR**	**WPS-1998**

Part No.	d (f8)	D (H9)	L (+0.2)	H	D1 (H9)	Matl.	Mould No.
W100901119	90.00	110.00	6.00	15.00	99.00	NBR	WPS-2670
W100921101	92.00	100.00	3.00	6.00	95.60	NBR	WPS-3404
W100935901	93.00	101.00	5.00	7.00	96.60	PU	WPH-1098
W100955905	95.00	102.00	3.50	5.50	98.15	PU	WPH-1277
W100955904	95.00	103.00	5.00	7.00	98.60	PU	WPH-1260
W100956705	95.00	103.50	7.00	10.00	98.83	FKM	WPS-3972
W100951112	95.00	103.60	4.00	7.00	98.87	NBR	WPS-4435
W10095L504	95.00	103.60	4.00	7.00	98.87	PU	WPH-1519
W10095L503	95.00	105.00	5.00	8.00	99.50	PU	WPH-854
W100956706	95.00	105.00	7.00	10.00	99.50	FKM	WPS-5316
W100951113	95.00	105.00	7.00	11.00	99.50	NBR	WPS-5361
W100951107	95.00	106.00	6.60	12.00	99.95	NBR	WPS-1858
W100951111	95.00	107.00	7.00	10.00	100.40	NBR	WPS-4315
W100951109	95.00	107.00	7.00	12.00	100.40	NBR	WPS-2759
W10095L506	95.00	108.00	5.30	10.00	100.85	PU	WPH-1596
W100951104	**95.00**	**108.00**	**5.00**	**10.00**	**100.85**	**NBR**	**WPS-2000**
W100951110	95.00	112.00	6.25	9.50	102.65	NBR	WPS-3041
W100950801	95.25	114.30	7.95	15.87	103.82	NBR	WPS-1279
W100961101	96.00	105.00	4.00	7.00	100.05	NBR	WPS-2528
W100961102	96.00	110.00	7.00	12.00	102.30	NBR	WPS-3505
W100971102	97.00	105.00	5.00	7.00	100.60	NBR	WPS-4314
W100971101	97.00	111.00	7.00	10.00	103.30	NBR	WPS-2925
W10098L501	98.00	111.00	4.00	8.00	103.85	PU	WPH-760
W100981102	98.43	107.95	3.00	5.00	102.71	NBR	WPS-3865
W101001122	100.00	108.00	4.80	7.00	103.60	NBR	WPS-4102
W101001111	100.00	108.00	5.00	7.00	103.60	NBR	WPS-4325
W101006716	100.00	108.00	5.00	7.00	103.60	FKM	WPS-1268
W101006706	100.00	108.00	5.00	7.50	103.60	FKM	WPS-2993
W101001119	100.00	108.00	7.00	10.00	103.60	NBR	WPS-2450
W101001103	**100.00**	**110.00**	**5.00**	**7.00**	**104.50**	**NBR**	**WPS-5300**
W101001110	100.00	110.00	6.00	8.00	104.50	NBR	WPS-1627
W101006710	100.00	110.00	7.00	10.00	104.50	FKM	WPS-4115
W101001113	100.00	110.00	7.00	10.00	104.50	NBR	WPS-4081
W101001121	100.00	112.00	6.00	9.00	105.40	NBR	WPS-3397
W101001118	100.00	112.00	7.00	10.00	105.40	NBR	WPS-2449
W101006708	100.00	112.00	7.00	10.00	105.40	FKM	WPS-3831
W101006714	100.00	112.00	7.00	11.00	105.40	FKM	WPS-5375
W10100L503	100.00	112.00	7.00	12.00	105.40	PU	WPH-1430
W101006709	100.00	112.00	7.00	12.00	105.40	FKM	WPS-1876
W10100L505	100.00	112.00	7.00	12.00	105.40	PU	WPH-1957
W101001120	100.00	112.00	8.00	10.00	105.40	NBR	WPS-3385
W10100L502	100.00	112.20	6.80	11.00	105.49	PU	WPH-1093
W101001124	100.00	112.20	7.70	10.00	105.49	NBR	WPS-4859
W101001117	100.00	112.20	7.00	10.00	105.49	NBR	WPS-2119
W101006701	100.00	112.20	7.00	12.00	105.49	FKM	WPS-2187
W101001101	**100.00**	**112.20**	**7.00**	**12.00**	**105.49**	**NBR**	**WPS-1667**
W101001123	100.00	112.20	7.00	12.00	105.49	NBR	WPS-4518
W101006712	100.00	112.50	7.20	12.00	105.63	FKM	WPS-4974
W101001126	100.00	114.20	7.00	10.00	106.39	NBR	WPS-4960
W101006707	100.00	115.00	7.70	11.00	106.75	FKM	WPS-3048
W101006711	100.00	115.00	9.30	12.30	106.75	FKM	WPS-4594
W101006704	100.00	115.00	9.50	14.00	106.75	FKM	WPS-5551

Bold sizes are readily available in stock.
Other materials are available on request.

MAX SPARE LIMITED
QUALITY. PRECISION. SPEED.

W10

Medium Duty Wiper Seal

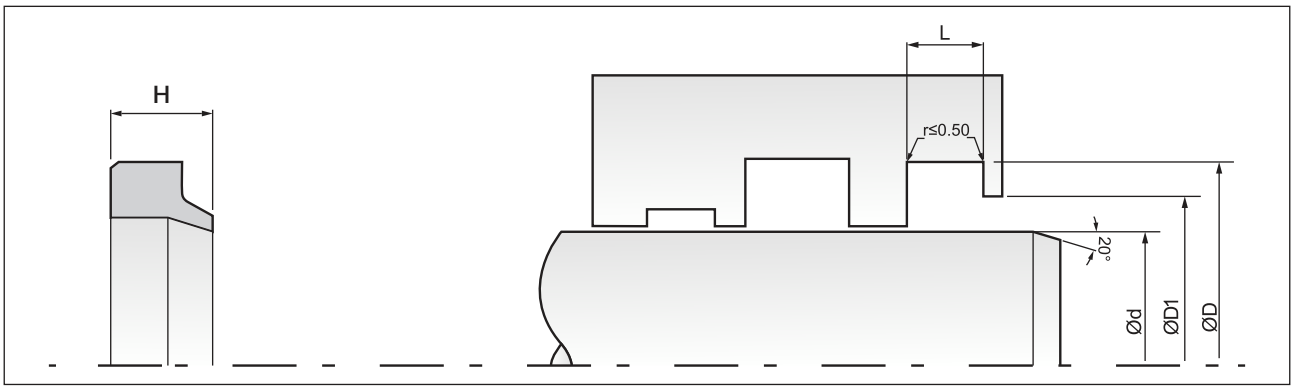

Part No.	d (f8)	D (H9)	L (+0.2)	H	D1 (H9)	Matl.	Mould No.
W101001125	100.00	120.00	7.00	12.00	109.00	NBR	W10-4892
W101006715	100.00	122.00	7.20	12.00	109.90	FKM	WPS-5387
W101001116	100.10	115.30	4.20	7.00	106.94	NBR	WPS-1883
W101016701	101.40	111.12	7.00	12.00	105.77	FKM	WPS-4040
W101016401	101.60	112.70	3.17	6.35	106.60	FKM	WPS-5318
W10101L501	101.60	114.30	3.00	5.00	107.32	PU	WPH-843
W101015903	101.60	114.30	6.35	10.03	107.32	PU	WPH-1427
W10101L502	101.60	114.30	6.00	9.53	107.32	PU	WPH-1956
W101031001	103.00	111.30	7.10	12.00	106.74	NBR	WPS-4124
W101041101	104.00	116.20	7.10	12.00	109.49	NBR	WPS-4666
W101056703	105.00	113.00	5.50	8.00	108.60	FKM	WPS-4403
W101051107	105.00	113.60	4.00	6.00	108.87	NBR	WPS-3736
W10105L501	105.00	115.00	4.00	7.50	109.50	PU	WPH-818
W101051108	105.00	115.00	4.00	8.00	109.50	NBR	WPS-3876
W10105L502	105.00	115.00	5.00	8.00	109.50	PU	WPH-855
W101051105	105.00	115.00	6.00	8.00	109.50	NBR	WPS-4136
W101051106	105.00	117.00	5.50	10.00	110.40	NBR	WPS-2908
W101056704	105.00	117.00	7.30	12.00	110.40	FKM	WPS-4754
W10105L503	105.00	117.00	7.00	12.00	110.40	PU	WPH-1955
W101056702	105.00	117.20	7.00	12.00	110.49	FKM	WPS-2648
W101055902	105.00	119.00	4.00	7.00	111.30	PU	WPH-310
W101066701	106.00	118.00	4.80	7.00	111.40	FKM	WPS-3439
W101066703	106.50	118.00	9.00	12.00	111.68	FKM	WPS-4277
W10107L501	107.00	114.60	5.00	7.00	110.42	PU	WPH-902
W101071001	107.95	120.65	6.35	10.03	113.67	NBR	WPS-3363
W10107L404	107.95	127.00	10.00	16.00	116.52	PU	WPH-1302
W101081102	108.00	125.00	7.00	10.00	115.65	NBR	WPS-5247
W101105909	110.00	118.60	5.00	7.00	113.87	PU	WPH-697
W101101106	110.00	120.00	4.00	7.00	114.50	NBR	WPS-1563
W101106716	110.00	120.00	7.40	12.40	114.50	FKM	WPS-5360
W101101117	110.00	120.00	8.00	12.00	114.50	NBR	WPS-4067
W101101114	110.00	121.00	4.00	7.00	114.95	NBR	WPS-2721
W101101113	110.00	122.00	6.25	9.50	115.40	NBR	WPS-2166
W101106706	110.00	122.00	7.00	12.00	115.40	FKM	WPS-3917
W10110L508	110.00	122.00	7.00	12.00	115.40	PU	WPH-1954
W101106605	110.00	122.00	8.00	10.00	115.40	FKM	WPS-3646
W101101115	110.00	122.00	8.00	10.00	115.40	NBR	WPS-2948
W101106712	110.00	122.00	9.00	12.00	115.40	FKM	WPS-4933
W101101118	110.00	122.20	10.00	18.00	115.49	NBR	WPS-4635
W10110L507	110.00	122.20	6.70	12.50	115.49	PU	WPH-1869
W101106717	110.00	122.20	7.10	10.00	115.49	FKM	WPS-5373
W101101112	110.00	122.20	7.10	10.00	115.49	NBR	WPS-4860
W101106701	110.00	122.20	7.00	12.00	115.49	FKM	WPS-3353
W10110L501	110.00	122.20	7.00	12.00	115.49	PU	WPH-709
W101101101	**110.00**	**122.20**	**7.00**	**12.00**	**115.49**	**NBR**	**WPS-1048**
W101106710	110.00	123.00	6.00	9.50	115.85	FKM	WPS-4832
W101106713	110.00	124.00	8.00	12.00	116.30	FKM	WPS-5002
W101106714	110.00	125.00	7.00	10.00	116.75	FKM	WPS-5138
W10110L506	110.00	125.00	9.00	12.00	116.75	PU	WPH-1362
W101106711	110.00	125.00	9.00	14.00	116.75	FKM	WPS-4882
W101106705	110.00	127.00	7.00	12.00	117.65	FKM	WPS-3840
W101118701	111.12	124.61	4.60	7.80	117.19	PU	WPH-197

Part No.	d (f8)	D (H9)	L (+0.2)	H	D1 (H9)	Matl.	Mould No.
W101121102	112.00	122.00	6.00	8.00	116.50	NBR	WPS-1639
W101136701	113.00	120.00	7.00	12.00	116.15	FKM	WPS-3600
W101141102	114.00	125.10	4.00	6.00	119.00	NBR	WPS-4316
W101141103	114.30	127.00	6.00	9.00	120.02	NBR	WPS-4318
W101151109	115.00	123.00	6.00	7.00	118.60	NBR	WPS-5000
W101151110	115.00	123.60	5.00	7.00	118.87	NBR	WPS-5451
W101151108	115.00	123.60	7.00	12.00	118.87	NBR	WPS-4899
W101151105	115.00	125.00	4.80	7.00	119.50	NBR	WPS-4103
W101151103	115.00	125.00	5.00	7.00	119.50	NBR	WPS-2367
W101156702	115.00	125.00	7.00	10.00	119.50	FKM	WPS-3946
W101155901	115.00	126.00	4.50	8.00	119.95	PU	WPH-1279
W101151111	115.00	127.00	5.00	7.00	120.40	NBR	WPS-5544
W101156701	115.00	127.00	7.00	12.00	120.40	FKM	WPS-1845
W101151106	115.00	127.20	7.00	12.00	120.49	NBR	WPS-4519
W101176601	117.00	128.00	5.30	12.00	121.95	FKM	WPS-3752
W10117L501	117.48	128.59	3.18	5.56	122.48	PU	WPH-834
W101181102	118.00	126.00	6.00	10.00	121.60	NBR	WPS-2841
W101181104	118.00	126.60	7.00	10.00	121.87	NBR	WPS-4317
W101181103	118.00	130.00	7.10	12.00	123.40	NBR	WPS-3551
W101180801	118.24	141.30	8.89	15.20	128.62	NBR	WPS-2881
W101201109	120.00	127.00	7.00	13.00	123.15	NBR	WPS-5362
W101201110	120.00	130.00	5.30	7.00	124.50	NBR	WPS-5503
W101206708	120.00	130.00	5.00	7.00	124.50	FKM	WPS-5090
W101206705	120.00	130.00	7.00	10.00	124.50	FKM	WPS-4118
W101206706	120.00	130.60	5.30	7.00	124.77	FKM	WPS-4617
W101201103	**120.00**	**130.60**	**5.00**	**7.00**	**124.77**	**NBR**	**WPS-1674**
W10120L501	120.00	132.00	5.60	10.00	125.40	PU	WPH-675
W101206709	120.00	132.00	7.00	10.00	125.40	FKM	WPS-5333
W10120L502	120.00	132.00	7.00	12.00	125.40	PU	WPH-672
W101206707	120.00	132.00	7.00	12.00	125.40	FKM	WPS-1809
W101201101	**120.00**	**132.20**	**7.00**	**12.00**	**125.40**	**NBR**	**WPS-2001**
W101201111	120.00	132.00	8.50	11.00	125.40	NBR	WPS-5527
W101206703	120.00	132.20	7.00	12.00	125.49	FKM	WPS-2184
W101205908	120.00	134.00	7.30	12.00	126.30	PU	WPH-1452
W101201107	120.00	135.00	7.00	12.00	126.75	NBR	WPS-3398
W101255907	125.00	133.00	5.30	8.00	128.60	PU	WPH-1337
W101256605	125.00	133.00	5.00	9.00	128.60	FKM	WPS-3955
W101251107	125.00	135.00	4.00	7.00	129.50	NBR	WPS-2232
W101256707	125.00	136.00	7.00	12.00	129.95	FKM	WPS-3777
W101256714	125.00	136.50	8.00	12.00	130.18	FKM	WPS-5529
W10125L506	125.00	137.00	10.00	16.00	130.40	PU	WPH-1465
W10125L510	125.00	137.00	7.00	12.00	130.40	PU	WPH-1952
W101251106	**125.00**	**137.00**	**7.00**	**12.00**	**130.40**	**NBR**	**WPS-925**
W101256710	125.00	137.00	8.00	10.00	130.40	FKM	WPS-4531
W101251109	125.00	140.00	10.00	16.00	131.75	NBR	WPS-4520
W101251103	**125.00**	**140.00**	**10.00**	**16.00**	**131.75**	**NBR**	**WPS-1559**
W101256702	125.00	140.00	10.00	16.00	131.75	FKM	WPS-2968
W101256713	125.00	140.00	7.50	10.00	131.75	FKM	WPS-5328
W10125L507	125.00	140.00	7.00	11.50	131.75	PU	WPH-1605
W101256704	125.00	140.00	7.00	12.00	131.75	FKM	WPS-2917
W101256703	125.00	140.20	10.00	16.00	131.84	FKM	WPS-2069
W101256709	125.00	141.00	7.50	10.00	132.20	FKM	WPS-4228

Bold sizes are readily available in stock.
Other materials are available on request.

W10

Medium Duty Wiper Seal

MAX SPARE LIMITED
QUALITY. PRECISION. SPEED.

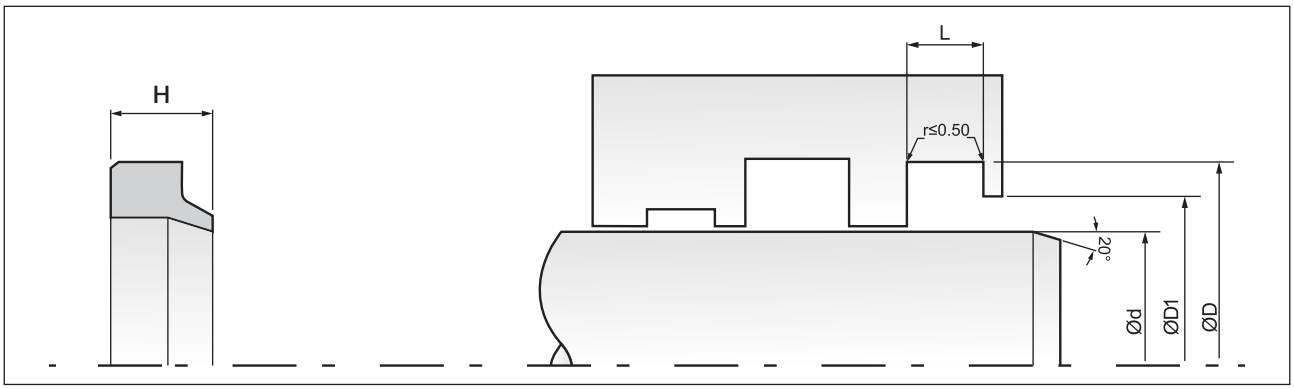

Part No.	d (f8)	D (H9)	L (+0.2)	H	D1 (H9)	Matl.	Mould No.
W101251108	125.00	141.00	7.50	11.00	132.20	NBR	WPS-4281
W101276703	127.00	137.16	3.17	5.71	131.57	FKM	WPS-3192
W101271106	127.00	139.20	7.00	10.00	132.49	NBR	WPS-3837
W101271105	127.00	140.00	7.00	12.00	132.85	NBR	WPS-3540
W101271103	127.00	141.28	8.50	11.50	133.43	NBR	WPS-946
W101271003	127.00	142.00	9.00	12.00	133.75	NBR	WPS-2495
W101275905	127.00	146.05	9.52	14.28	135.57	PU	WPH-1421
W101306704	130.00	138.00	5.30	7.00	133.60	FKM	WPS-5024
W101301103	130.00	138.00	5.00	7.00	133.60	NBR	WPS-189
W101301101	**130.00**	**142.00**	**7.00**	**10.00**	**135.40**	**NBR**	**WPS-1435**
W101301104	130.00	142.00	7.00	12.00	135.40	NBR	WPS-2113
W101301107	130.00	142.20	7.00	12.00	135.49	NBR	WPS-2402
W101301108	130.00	143.00	4.00	7.00	135.85	NBR	WPS-2649
W101306703	130.00	143.00	7.00	9.50	135.85	FKM	WPS-4458
W10130L501	130.00	145.00	6.80	14.00	136.75	PU	WPH-738
W101311101	131.00	142.50	4.00	7.00	136.18	NBR	WPS-3005
W101351103	135.00	143.00	5.00	7.00	138.60	NBR	WPS-4951
W101356701	135.00	145.00	7.00	12.00	139.50	FKM	WPS-5599
W101351003	135.00	145.00	7.00	15.00	139.50	NBR	WPS-3598
W101351105	135.00	147.00	7.00	12.00	140.40	NBR	WPS-4104
W101355907	135.00	147.20	7.20	13.20	140.49	PU	WPH-1432
W101355906	135.00	148.20	9.30	14.25	140.94	PU	WPH-1280
W101381101	138.00	150.00	5.20	8.50	143.40	NBR	WPS-5140
W101386701	138.50	153.00	6.80	10.20	145.03	FKM	WPS-5208
W101396705	139.65	149.50	3.00	6.00	144.08	FKM	WPS-4720
W101396703	139.65	155.00	9.30	12.30	146.56	FKM	WPS-3846
W101391101	139.70	149.20	7.00	12.00	143.98	NBR	WPS-3340
W101391102	139.70	152.40	6.50	10.00	145.42	NBR	WPS-4320
W101406719	140.00	149.50	3.00	6.00	144.28	FKM	WPS-4924
W101401106	**140.00**	**150.00**	**5.00**	**7.00**	**144.50**	**NBR**	**WPS-1474**
W101405903	140.00	150.00	5.00	7.00	144.50	PU	WPH-1898
W101401116	140.00	151.00	5.00	9.00	144.95	NBR	WPS-4772
W101400801	140.00	152.00	7.50	15.00	145.40	NBR	WPS-1774
W101401115	140.00	152.00	7.70	12.00	145.40	NBR	WPS-4319
W10140R301	140.00	152.00	7.00	10.80	145.40	PU	WPH-1200
W101406704	140.00	152.00	7.00	11.50	145.40	FKM	WPS-1652
W101406720	140.00	152.00	7.00	12.00	145.40	FKM	WPS-5246
W10140L504	140.00	152.00	7.00	12.00	145.40	PU	WPH-1951
W101401114	140.00	152.00	7.00	13.00	145.40	NBR	WPS-3103
W101401113	140.00	152.00	8.00	10.00	145.40	NBR	WPS-2949
W101406716	140.00	152.00	8.00	10.00	145.40	FKM	WPS-4160
W101406721	140.00	152.00	9.00	14.00	145.40	FKM	WPS-5420
W101406710	140.00	152.20	7.00	10.00	145.49	FKM	WPS-2306
W101401112	140.00	152.20	7.00	10.00	145.49	NBR	WPS-2117
W10140L503	140.00	154.00	4.90	11.50	146.30	PU	WPH-1604
W101406715	140.00	154.00	9.00	14.00	146.30	FKM	WPS-3884
W101406714	140.00	155.00	10.00	16.00	146.75	FKM	WPS-3833
W101401101	**140.00**	**155.00**	**10.00**	**16.00**	**146.75**	**NBR**	**WPS-4330**
W101406712	140.00	155.00	11.20	16.00	146.75	FKM	WPS-3742
W101406603	140.00	155.00	5.30	7.00	146.75	FKM	WPS-3797
W10140L502	140.00	155.00	9.00	12.00	146.75	PU	WPH-1363
W101406711	140.00	155.60	9.00	12.00	147.02	FKM	WPS-3196

Part No.	d (f8)	D (H9)	L (+0.2)	H	D1 (H9)	Matl.	Mould No.
W101401118	140.00	159.00	7.00	11.00	148.55	NBR	WPS-5618
W101431101	143.00	151.00	6.00	10.00	146.60	NBR	WPS-2842
W10145L501	145.00	153.00	4.00	7.00	148.60	PU	WPH-788
W10145L502	145.00	157.00	7.00	12.00	150.40	PU	WPH-1970
W101456601	145.00	160.00	7.50	15.00	151.75	FKM	WPS-3931
W101451103	145.00	160.00	9.00	16.00	151.75	NBR	WPS-1720
W101461103	146.05	158.75	4.00	8.00	151.77	NBR	WPS-2274
W10147L501	147.00	154.60	5.00	7.00	150.42	PU	WPH-789
W10147L401	147.65	163.52	9.60	15.00	154.79	PU	WPH-1090
W101501108	150.00	160.00	4.00	7.00	154.50	NBR	WPS-2231
W10150L502	150.00	162.00	7.00	12.00	155.40	PU	WPH-1967
W101501110	150.00	162.00	7.00	12.00	155.40	NBR	WPS-4321
W101501107	**150.00**	**162.00**	**7.00**	**8.20**	**155.40**	**NBR**	**WPS-2002**
W101506708	150.00	163.00	7.00	10.00	155.85	FKM	WPS-5509
W101505901	150.00	165.00	10.00	16.00	156.75	PU	WPH-1021
W101501101	**150.00**	**165.00**	**10.00**	**16.00**	**156.75**	**NBR**	**WPS-3478**
W101501111	150.00	165.00	10.00	16.00	156.75	NBR	WPS-4521
W101501109	150.00	165.00	7.00	12.00	156.75	NBR	WPS-3863
W101506704	150.00	167.28	8.00	12.00	157.78	FKM	WPS-2723
W101526702	152.00	169.00	8.50	13.00	159.65	FKM	WPS-4889
W101541101	154.00	166.00	8.00	12.00	159.40	NBR	WPS-3044
W101556701	155.00	163.00	4.00	7.50	158.60	FKM	WPS-3286
W101551105	155.00	163.00	4.00	8.00	158.60	NBR	WPS-4604
W101551104	155.00	167.00	7.00	12.00	160.40	NBR	WPS-4522
W101551106	155.00	167.20	7.30	12.00	160.49	NBR	WPS-5405
W101558702	155.00	167.20	7.00	12.00	160.49	PU	WPH-305
W101551103	**155.00**	**169.20**	**7.00**	**12.00**	**161.39**	**NBR**	**WPS-2003**
W101586601	158.00	175.00	10.00	16.00	165.65	FKM	WPS-4515
W101586703	158.75	190.50	12.70	22.22	173.04	FKM	WPS-5613
W101596701	159.00	174.00	7.00	10.00	165.75	FKM	WPS-2600
W101596702	159.00	175.00	10.00	16.00	166.20	FKM	WPS-3799
W10160L501	160.00	168.00	5.00	7.00	163.60	PU	WPH-613
W101606706	160.00	174.00	10.00	16.50	166.30	FKM	WPS-4294
W10160L502	160.00	174.00	4.90	11.50	166.30	PU	WPH-1603
W101601111	160.00	174.00	7.00	12.00	166.30	NBR	WPS-3506
W101601105	160.00	175.00	10.20	16.00	166.75	NBR	WPS-780
W101601108	**160.00**	**175.00**	**10.00**	**12.00**	**166.75**	**NBR**	**WPS-2004**
W101601114	160.00	175.00	10.00	16.00	166.75	NBR	WPS-4523
W10160L503	160.00	175.00	10.00	16.00	166.75	PU	WPH-1968
W101606701	160.00	175.00	10.00	16.00	166.75	FKM	WPS-2048
W101605905	160.00	179.00	9.00	13.00	168.55	PU	WPH-1034
W101601112	160.00	180.00	7.00	10.00	169.00	NBR	WPS-3512
W101606705	160.00	180.00	8.80	13.50	169.00	FKM	WPS-4244
W101601110	160.00	180.00	9.50	14.00	169.00	NBR	WPS-3409
W101651105	**165.00**	**173.00**	**5.00**	**7.00**	**168.60**	**NBR**	**WPS-3763**
W101651104	165.00	180.00	10.00	16.00	171.75	NBR	WPS-1889
W10170L502	170.00	180.00	5.30	7.00	174.50	PU	WPH-1858
W101706703	170.00	180.00	7.00	12.00	174.50	FKM	WPS-3483
W100223401	170.00	182.00	7.50	15.00	175.40	NBR	WPS-1775
W101701101	**170.00**	**182.00**	**7.00**	**12.00**	**175.40**	**NBR**	**WPS-460**
W101706705	170.00	185.00	10.00	16.00	176.75	FKM	WPS-3640
W101706706	170.00	185.00	6.00	12.00	176.75	FKM	WPS-4764

Bold sizes are readily available in stock.
Other materials are available on request.

W10

Medium Duty Wiper Seal

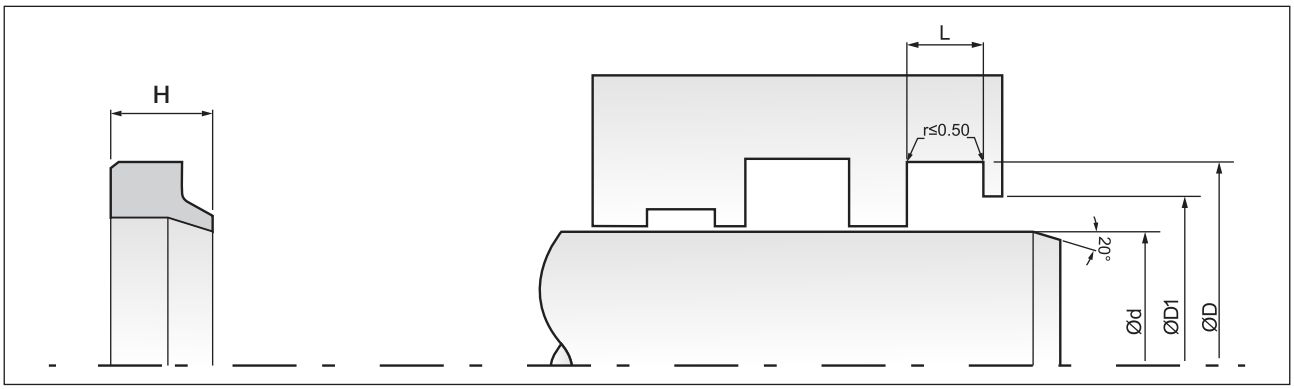

Part No.	d (f8)	D (H9)	L (+0.2)	H	D1 (H9)	Matl.	Mould No.
W101701103	170.00	185.00	9.80	14.00	176.75	NBR	WPS-4524
W10170L501	170.00	190.20	9.00	13.00	179.09	PU	WPH-794
W101706702	170.00	200.00	10.00	16.00	183.50	FKM	WPS-3473
W10172L501	172.00	185.00	7.00	9.50	177.85	PU	WPH-1653
W10175L501	175.00	188.00	7.00	9.50	180.85	PU	WPH-1699
W101756701	175.00	195.00	10.00	18.00	184.00	FKM	WPS-3705
W101776703	177.72	191.97	8.00	10.00	184.13	FKM	WPS-5435
W101786701	178.00	194.00	10.00	15.00	185.20	FKM	WPS-2245
W101796701	179.60	200.00	10.00	15.00	188.78	FKM	WPS-3235
W101806710	180.00	191.00	6.00	12.00	184.95	FKM	WPS-4388
W101801111	180.00	191.00	7.80	9.70	184.95	NBR	WPS-4583
W101806711	180.00	192.00	10.00	16.00	185.40	FKM	WPS-4762
W101806704	180.00	192.00	5.00	7.00	185.40	FKM	WPS-2061
W101806708	180.00	192.00	7.00	10.00	185.40	FKM	WPS-4153
W101801113	180.00	192.00	8.00	10.00	185.40	NBR	WPS-5203
W101806713	180.00	192.20	9.20	15.00	185.49	FKM	WPS-5432
W101806712	180.00	193.00	6.50	11.00	185.85	FKM	WPS-5242
W101801109	180.00	193.00	9.00	12.00	185.85	NBR	WPS-3411
W101801106	180.00	194.00	7.00	10.00	186.30	NBR	WPS-1112
W101806703	180.00	195.00	10.00	14.00	186.75	FKM	WPS-1776
W10180L503	180.00	195.00	10.00	14.00	186.75	PU	WPH-1969
W101805907	180.00	198.00	10.00	16.00	188.10	PU	WPH-1022
W101806706	180.00	198.00	8.60	11.00	188.10	FKM	WPS-3933
W101806709	180.00	198.00	8.60	12.00	188.10	FKM	WPS-4243
W101806705	180.00	198.50	10.00	18.00	188.33	FKM	WPS-2815
W101801103	**180.00**	**200.00**	**10.00**	**18.00**	**189.00**	**NBR**	**WPS-592**
W101801115	180.00	220.00	15.00	25.00	198.00	NBR	WPS-5560
W101825901	182.00	200.00	10.00	16.00	190.10	PU	WPH-1023
W101835901	183.00	200.00	10.00	16.00	190.65	PU	WPH-1024
W101851103	185.00	197.00	7.30	10.00	190.40	NBR	WPS-5174
W101851101	185.00	200.00	10.20	16.00	191.75	NBR	WPS-2226
W101866701	186.40	200.20	4.00	7.50	192.61	FKM	WPS-3618
W101905906	190.00	203.00	7.00	9.50	195.85	PU	WPH-1651
W101901102	**190.00**	**210.00**	**10.20**	**18.00**	**199.00**	**NBR**	**WPS-1254**
W101901106	190.00	210.00	10.00	18.00	199.00	NBR	WPS-4526
W101901105	190.50	210.00	10.00	18.00	199.28	NBR	WPS-3077
W101981101	198.00	215.00	5.00	11.00	205.65	NBR	WPS-3424
W102006703	200.00	208.00	10.30	16.00	203.60	FKM	WPS-3225
W102006708	200.00	212.00	7.30	12.00	205.40	FKM	WPS-4041
W102001110	200.00	212.00	7.00	10.00	205.40	NBR	WPS-2927
W102006705	200.00	212.00	8.20	11.00	205.40	FKM	WPS-2309
W102006709	200.00	212.20	7.30	12.00	205.49	FKM	WPS-5221
W102006706	200.00	213.00	7.50	10.50	205.85	FKM	WPS-3316
W102001111	200.00	213.00	7.00	12.00	205.85	NBR	WPS-3508
W102006704	200.00	215.20	10.00	19.50	206.84	FKM	WPS-2110
W102006707	200.00	218.00	9.00	12.00	208.10	FKM	WPS-3934
W102001101	**200.00**	**220.00**	**10.20**	**18.00**	**209.00**	**NBR**	**WPS-2686**
W102006710	200.00	220.00	10.20	16.00	209.00	FKM	WPS-5383
W102006701	200.00	220.00	10.00	18.00	209.00	FKM	WPS-828
W102000901	200.00	224.50	6.50	16.00	211.03	NBR	WPS-5233
W10203L501	203.20	222.17	9.49	14.28	211.74	PU	WPH-1915
W102051102	205.00	225.00	10.00	18.00	214.00	NBR	WPS-4030

Part No.	d (f8)	D (H9)	L (+0.2)	H	D1 (H9)	Matl.	Mould No.
W102101102	210.00	220.00	5.00	7.00	214.50	NBR	WPS-2847
W102101105	210.00	224.00	7.00	12.00	216.30	NBR	WPS-4543
W102106701	210.00	225.00	10.00	16.00	216.75	FKM	WPS-4270
W102101104	210.00	230.00	10.00	18.00	219.00	NBR	WPS-4527
W10210L501	210.00	230.00	12.00	16.00	219.00	PU	WPH-1391
W102121101	212.00	236.20	11.00	14.00	222.89	NBR	WPS-1636
W102156704	215.00	228.00	6.00	12.00	220.85	FKM	WPS-5155
W10215L501	215.00	230.00	8.20	11.00	221.75	PU	WPH-1564
W102156602	215.00	235.00	10.00	18.00	224.00	FKM	WPS-3464
W102156702	215.90	234.95	8.50	12.00	224.47	FKM	WPS-3429
W102156601	215.90	236.00	10.00	18.00	224.95	FKM	WPS-2185
W102196701	219.50	233.70	7.30	10.00	225.89	FKM	WPS-2722
W102206704	220.00	233.00	8.00	12.00	225.85	FKM	WPS-4355
W102206703	220.00	235.00	10.00	16.00	226.75	FKM	WPS-4130
W102206705	220.00	240.00	10.00	15.00	229.00	FKM	WPS-5241
W102206601	220.00	240.00	10.00	16.00	229.00	FKM	WPS-2909
W102206701	220.00	240.00	10.00	18.00	229.00	FKM	WPS-4465
W102251102	225.00	245.00	10.00	18.00	234.00	NBR	WPS-2637
W102301103	230.00	245.00	10.20	16.00	236.75	NBR	WPS-3548
W102301104	230.00	245.00	10.00	16.00	236.75	NBR	WPS-4499
W102301101	230.00	245.00	7.00	12.00	236.75	NBR	WPS-2835
W102306701	230.00	245.00	9.80	18.00	236.75	FKM	WPS-4564
W102301102	230.00	250.00	10.00	18.00	239.00	NBR	WPS-3137
W102406701	240.00	260.00	10.00	18.00	249.00	FKM	WPS-3832
W102488701	248.26	260.96	3.84	6.45	253.98	PU	WPH-1156
W102501109	250.00	265.00	7.00	14.00	256.75	NBR	WPS-3187
W102506702	250.00	270.00	10.00	16.00	259.00	FKM	WPS-1767
W102506701	250.00	270.00	10.00	18.00	259.00	FKM	WPS-5141
W102501101	**250.00**	**270.00**	**10.00**	**18.00**	**259.00**	**NBR**	**WPS-5249**
W102505906	250.00	274.20	7.00	11.00	260.89	PU	WPH-1544
W102601102	260.00	280.00	10.00	18.00	269.00	NBR	WPS-2477
W102686301	268.00	288.00	16.00	18.00	277.00	FKM	WPS-5419
W102706701	270.00	290.00	10.00	18.00	279.00	FKM	WPS-4144
W102801102	280.00	289.00	10.00	15.00	284.05	NBR	WPS-2836
W102806701	280.00	300.00	10.00	18.00	289.00	FKM	WPS-1733
W102801101	280.00	300.00	10.00	18.00	289.00	NBR	WPS-406
W102806710	280.00	300.00	8.00	15.00	289.00	FKM	WPS-5018
W102801104	280.00	300.00	9.00	14.00	289.00	NBR	WPS-4806
W102851101	285.00	310.00	12.70	20.00	296.25	NBR	WPS-3280
W102901102	290.00	305.00	7.30	15.00	296.75	NBR	WPS-3849
W102906701	290.00	305.00	7.70	15.00	296.75	FKM	WPS-2295
W102906702	290.00	310.00	10.20	18.00	299.00	FKM	WPS-2758
W102981101	298.00	327.50	7.00	15.00	311.28	NBR	WPS-3425
W10300R301	300.00	315.00	4.10	9.00	306.75	PU	WPH-1703
W103006701	300.00	320.00	10.00	18.00	309.00	FKM	WPS-4082
W103001102	300.00	320.00	10.00	18.00	309.00	NBR	WPS-709
WC3001103	300.00	320.00	7.00	10.00	309.00	NBR	WPS-3803
W103041103	304.72	317.22	4.29	7.00	310.35	NBR	WPS-4620
W103101101	310.00	325.20	10.00	18.00	316.84	NBR	WPS-4122
W103201102	320.00	340.00	10.00	18.00	329.00	NBR	WPS-1650
W103205902	320.00	340.00	10.00	18.00	329.00	PU	WPH-1469
W10320L501	320.00	348.00	9.60	20.00	332.60	PU	WPH-1881

Bold sizes are readily available in stock.
Other materials are available on request.

W10

Medium Duty Wiper Seal

MAX SPARE LIMITED
QUALITY. PRECISION. SPEED.

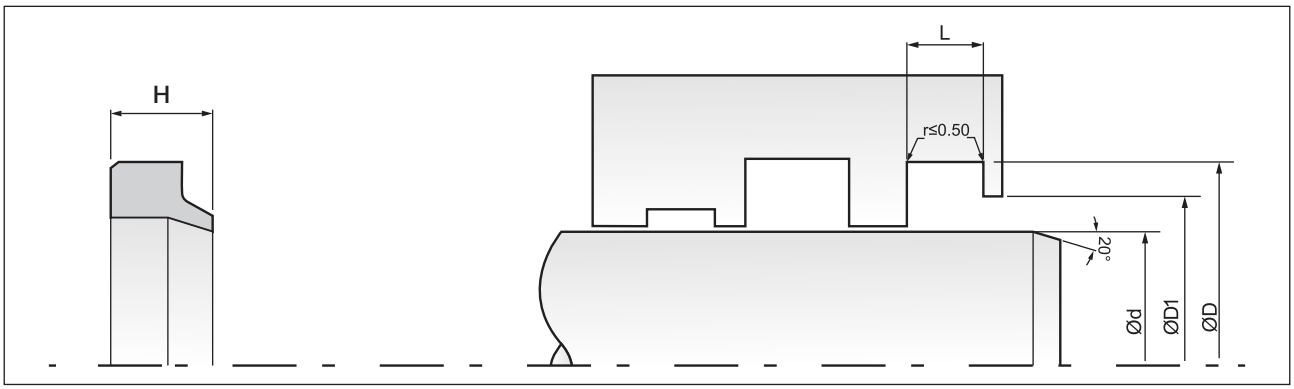

Part No.	d (f8)	D (H9)	L (+0.2)	H	D1 (H9)	Matl.	Mould No.
W103206702	320.00	350.00	10.00	18.00	333.50	FKM	WPS-5288
W103306701	330.00	354.00	8.00	12.00	340.80	FKM	WPS-4949
W103406701	340.00	365.00	8.00	20.00	351.25	FKM	WPS-5585
W103601105	360.00	378.00	7.50	15.00	368.10	NBR	WPS-3188
W103606701	360.00	380.00	11.50	17.00	369.00	FKM	WPS-3990
W103601107	360.00	380.00	9.80	18.00	369.00	NBR	WPS-5061
W103601106	360.00	390.00	12.50	20.00	373.50	NBR	WPS-4301
W103681101	368.30	386.28	7.49	15.01	376.39	NBR	WPS-5671
W104006702	400.00	420.00	10.00	16.00	409.00	FKM	WPS-5581
W104001101	400.00	420.00	10.00	18.00	409.00	NBR	WPS-1405
W104006701	400.00	428.00	10.00	18.00	412.60	FKM	WPS-5226
W104026701	402.00	422.00	11.70	18.00	411.00	FKM	WPS-2230
W104206701	420.00	460.00	20.00	28.00	438.00	FKM	WPS-4613
W104446701	444.50	469.90	15.87	19.05	455.93	FKM	WPS-4058
W104450601	445.00	463.66	7.50	15.50	453.40	NBR	WPS-600
W104506701	450.00	471.80	10.00	18.00	459.81	FKM	WPS-2913
W104506702	450.00	475.00	8.00	18.00	461.25	FKM	WPS-5452
W104531101	453.00	474.00	10.00	18.00	462.45	NBR	WPS-4407

Part No.	d (f8)	D (H9)	L (+0.2)	H	D1 (H9)	Matl.	Mould No.
W104596701	459.00	491.00	15.00	25.00	473.40	FKM	WPS-3231
W104600601	460.00	478.50	7.50	15.50	468.33	NBR	WPS-3733
W104601103	460.00	485.00	10.00	20.00	471.25	NBR	WPS-2466
W104806701	480.00	505.00	10.00	16.00	491.25	FKM	WPS-5272
W104950601	495.00	522.30	7.50	15.50	507.29	NBR	WPS-3490
W105201101	520.00	544.00	8.00	18.00	530.80	NBR	WPS-3191
W105451001	545.00	565.00	10.00	18.00	554.00	NBR	WPS-4064
W105506601	550.00	570.00	10.00	14.00	559.00	FKM	WPS-3976
W106151101	615.95	647.95	10.99	21.99	630.35	NBR	WPS-5670
W106301102	630.00	660.00	14.00	20.00	643.50	NBR	WPS-3561
W107001102	700.00	725.00	12.50	20.00	711.25	NBR	WPS-1815
W107451101	745.00	777.00	11.00	12.00	759.40	NBR	WPS-3189
W107501001	750.00	777.30	9.50	17.50	762.29	NBR	WPS-500
W107501101	750.00	782.00	11.00	22.00	764.40	NBR	WPS-3190
W107701101	770.00	795.00	12.50	20.00	781.25	NBR	WPS-3526
W100805912	780.00	792.60	5.80	8.00	785.67	PU	WPH-1125
W1016554101	1655.00	1692.00	18.70	22.50	1671.65	VMQ	SLO-471

Bold sizes are readily available in stock.
Other materials are available on request.

W14

Heavy Duty Wiper Seal

DETAILS

W14 is a single acting metal-cased wiper seal, designed to press fit into open groove housings for light and medium-duty applications. The precision moulded Nitrile rubber (NBR) wiping element is bonded to a metal case treated to prevent rust. The proportions of the NBR wiping lip follow the side movement of the rod to clear away the deposited dirt. W14 also available in Polyurethane material. Due to excellent wear resistance of polyurethane the life expected is 3 times than that of NBR.

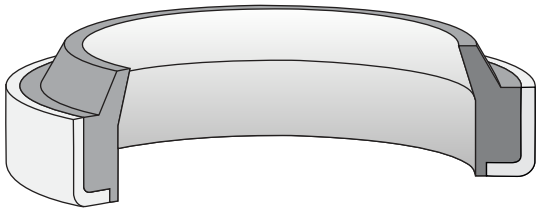

COMPATIBILITY

Mineral oils, bio oils, water soluble & water glycol fluids.

MATERIAL

Nitrile Rubber 85/90 Shore A
Mild Steel (SS-304/316 on request)

APPLICATION

- Light to Medium duty machineries.
- Hydraulic and Pneumatic cylinders.

OPERATING CONDITIONS

Temperature Range : -30°C to + 100°C
Speed : 0.5 m/s

FEATURES

- General purpose seal.
- Good wiping performance.
- Heavy duty application.
- Long service life.
- Seal retainer not required.
- Press fitting into the groove.

SURFACE ROUGHNESS

Static : 0.8 μmRa
Dynamic : 0.4 μmRa

INSTALLATION & ASSEMBLY

W14 seals are press fit into axially open grooves. The fitting tool must have no sharp edges. The seal must lubricate before installation.

W14

Heavy Duty Wiper Seal

MAX SPARE LIMITED
QUALITY. PRECISION. SPEED.

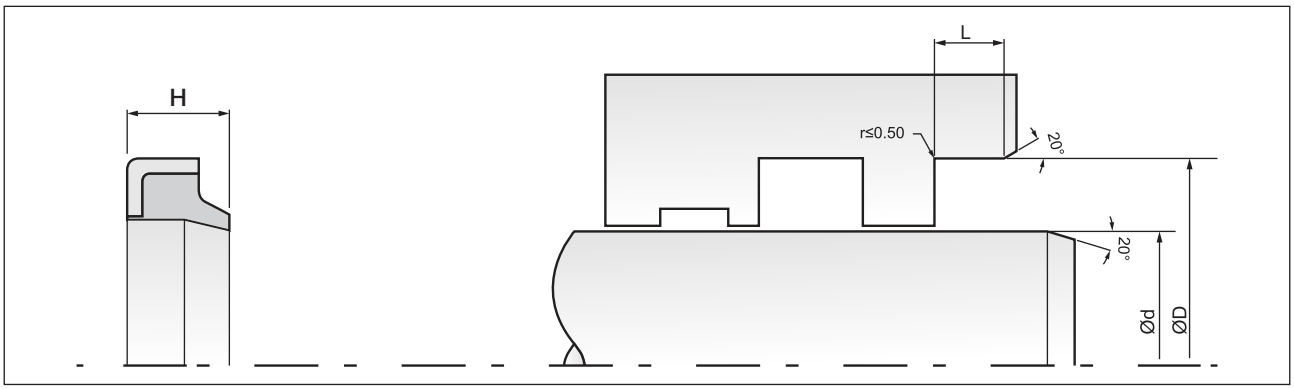

Part No.	d (f8)	D (H9)	L (+0.2)	H	Matl.	Mould No.
W14066601	6.00	13.00	3.00	4.50	FKM	WPS-1131
W140061101	**6.00**	**13.00**	**3.00**	**4.50**	**NBR**	**WPS-6297**
W140061102	6.00	13.00	3.00	5.00	NBR	WPS-4914
W140071101	7.00	13.00	3.00	4.50	NBR	WPS-2566
W140081103	8.00	13.00	3.00	4.00	NBR	WPS-5317
W140081104	8.00	13.00	3.00	4.50	NBR	WPS-6620
W140081102	8.00	14.00	3.00	4.50	NBR	WPS-3116
W140086701	8.00	14.00	3.50	5.50	FKM	WPS-7488
W140081101	8.00	15.00	3.00	4.50	NBR	WPS-2153
W140091103	9.00	13.00	3.00	4.50	NBR	WPS-5696
W140091102	9.00	16.00	3.00	4.50	NBR	WPS-5134
W140091101	9.50	15.00	3.50	5.00	NBR	WPS-4695
W140096701	9.52	14.28	3.17	3.96	FKM	WPS-7147
W140101108	10.00	14.00	3.00	4.00	NBR	WPS-5622
W140101105	10.00	14.40	3.00	3.80	NBR	WPS-3475
W140106701	10.00	14.40	3.20	4.00	FKM	WPS-5674
W140101101	**10.00**	**16.00**	**3.00**	**4.50**	**NBR**	**WPS-638**
W140101101	**10.00**	**16.00**	**3.00**	**4.50**	**NBR**	**WPS-3820**
W140101104	10.00	18.00	5.00	7.00	NBR	WPS-1326
W140101111	10.00	18.90	2.80	5.20	NBR	WPS-6722
W140101110	10.00	20.00	4.00	6.00	NBR	WPS-6419
W140101102	10.00	20.00	5.00	8.00	NBR	WPS-1350
W140101107	10.00	20.00	6.00	8.00	NBR	WPS-5059
W140101107	10.00	20.00	6.00	8.00	NBR	WPS-6942
W140101109	10.00	21.25	6.50	12.00	NBR	WPS-6348
W14010L501	10.00	24.00	4.00	5.00	PU	WPH-2457
W140101106	10.00	50.00	7.00	10.00	NBR	WPS-3717
W140111102	11.00	16.00	3.00	4.50	NBR	WPS-5064
W140111101	11.50	20.00	4.00	6.00	NBR	WPS-3871
W140111103	11.98	19.81	4.00	6.00	NBR	WPS-6423
W14012L501	12.00	18.00	3.00	5.00	PU	WPH-2560
W140121101	**12.00**	**18.00**	**3.50**	**5.00**	**NBR**	**WPS-1904**
W140121108	12.00	18.00	4.00	6.00	NBR	WPS-4453
W140121120	12.00	19.00	2.20	3.00	NBR	WPS-5777
W140121121	12.00	19.00	4.00	6.50	NBR	WPS-5867
W140121125	12.00	20.00	2.50	4.00	NBR	WPS-6963
W140121115	12.00	20.00	3.00	5.00	NBR	WPS-4379
W140121102	**12.00**	**20.00**	**4.00**	**6.00**	**NBR**	**WPS-452**
W140121116	12.00	20.00	5.00	10.00	NBR	WPS-2971
W140126701	12.00	21.00	5.00	7.00	FKM	WPS-3556
W140121124	12.50	19.00	2.00	5.00	NBR	WPS-6941
W14012V201	12.70	18.00	4.00	5.90	NBR	WPS-5570
W140121123	12.70	25.50	6.35	9.00	NBR	WPS-6632
W140141105	14.00	20.00	3.00	4.00	NBR	WPS-6547
W140141103	14.00	20.00	3.50	5.00	NBR	WPS-4416
W14014S401	14.00	20.00	3.50	5.00	HNBR	WPS-5719
W140141104	14.00	20.00	4.00	6.00	NBR	WPS-4640
W140141104	14.00	20.00	4.00	6.00	NBR	WPS-4659
W140141106	14.00	21.00	4.00	6.00	NBR	WPS-7253
W140141101	14.00	22.00	3.00	4.00	NBR	WPS-4723
W140141101	**14.00**	**22.00**	**3.00**	**4.00**	**NBR**	**WPS-211**
W14014L501	14.00	22.00	3.00	4.00	PU	WPH-2458

Part No.	d (f8)	D (H9)	L (+0.2)	H	Matl.	Mould No.
W140141102	14.00	24.00	5.00	8.00	NBR	WPS-4249
W140145902	14.00	25.00	5.00	8.00	PU	WPH-1144
W140151112	15.00	21.00	3.00	5.00	NBR	WPS-6008
W140151111	15.00	25.00	5.00	7.00	NBR	WPS-5871
W140156702	15.00	25.00	5.00	7.00	FKM	WPS-3509
W140151101	15.00	25.00	5.00	8.00	NBR	WPS-1328
W140151109	15.00	25.00	7.00	10.00	NBR	WPS-3716
W140156701	15.60	25.70	5.00	7.00	FKM	WPS-3498
W140151107	15.80	22.23	3.00	4.50	NBR	WPS-2209
W140151110	15.87	23.79	4.74	6.74	NBR	WPS-5539
W140161126	16.00	20.00	2.90	3.90	NBR	WPS-6878
W140161110	16.00	22.00	2.80	4.30	NBR	WPS-3455
W140161101	16.00	22.00	3.00	4.00	NBR	WPS-3776
W14016L502	16.00	22.00	3.00	4.00	PU	WPH-1721
W140161101	**16.00**	**22.00**	**3.00**	**4.00**	**NBR**	**WPS-793**
W140166702	16.00	22.00	3.00	4.00	FKM	WPS-4846
W140161901	16.00	22.00	3.00	4.50	CR	WPS-5077
W140161128	16.00	22.00	3.50	5.00	NBR	WPS-7238
W140161119	16.00	22.00	4.00	6.00	NBR	WPS-4687
W140161109	16.00	22.00	5.00	8.00	NBR	WPS-2833
W140161123	16.00	23.00	2.50	5.00	NBR	WPS-5826
W140161102	16.00	24.00	3.00	4.00	NBR	WPS-5126
W140161113	16.00	24.00	4.00	7.00	NBR	WPS-4169
W140161112	16.00	24.00	5.00	8.00	NBR	WPS-3631
W140166701	16.00	24.00	5.00	10.00	FKM	WPS-3940
W14016L503	16.00	25.00	4.00	5.30	PU	WPH-1899
W140161118	16.00	25.00	4.00	7.00	NBR	WPS-4348
W140161120	16.00	25.00	5.00	8.50	NBR	WPS-4910
W140161111	16.00	26.00	3.00	4.50	NBR	WPS-3461
W14016L501	16.00	26.00	5.00	8.00	PU	WPH-1598
W140161103	**16.00**	**26.00**	**5.00**	**8.00**	**NBR**	**WPS-1083**
W140161124	16.00	26.20	5.00	7.00	NBR	WPS-6031
W140161127	16.00	27.00	5.00	7.00	NBR	WPS-7140
W140161104	16.00	28.00	5.00	8.00	NBR	WPS-3885
W140171101	17.45	25.40	5.00	7.20	NBR	WPS-3753
W140181105	18.00	25.00	5.00	7.00	NBR	WPS-3042
W140181103	18.00	26.00	5.00	7.00	NBR	WPS-1860
W140181104	18.00	28.00	5.00	7.00	NBR	WPS-1330
W14018V201	18.00	28.00	5.00	8.00	NBR	WPS-7251
W140181106	18.00	28.00	6.00	9.00	NBR	WPS-6733
W140181102	**18.00**	**28.00**	**7.00**	**10.00**	**NBR**	**WPS-979**
W14018L501	18.00	28.00	7.00	10.00	PU	WPH-2459
W140181107	18.00	30.00	5.00	7.00	NBR	WPS-7216
W140190802	19.00	25.00	5.00	7.00	NBR	WPS-991
W140198701	19.00	26.00	5.00	7.00	PU	WPH-583
W140191108	19.00	26.00	5.00	7.00	NBR	WPS-2635
W140191107	19.00	27.00	5.00	8.00	NBR	WPS-2636
W140191112	19.00	27.00	5.00	8.00	NBR	WPS-6732
W140191113	19.00	28.30	5.00	8.00	NBR	WPS-7341
W14019V303	19.05	24.00	5.00	7.00	NBR	WPS-5771
W14019V203	19.05	25.00	5.00	7.00	NBR	WPS-5146
W14019V202	19.05	26.95	3.50	5.50	NBR	WPS-3962

Bold sizes are readily available in stock.
Other materials are available on request.

W14

Heavy Duty Wiper Seal

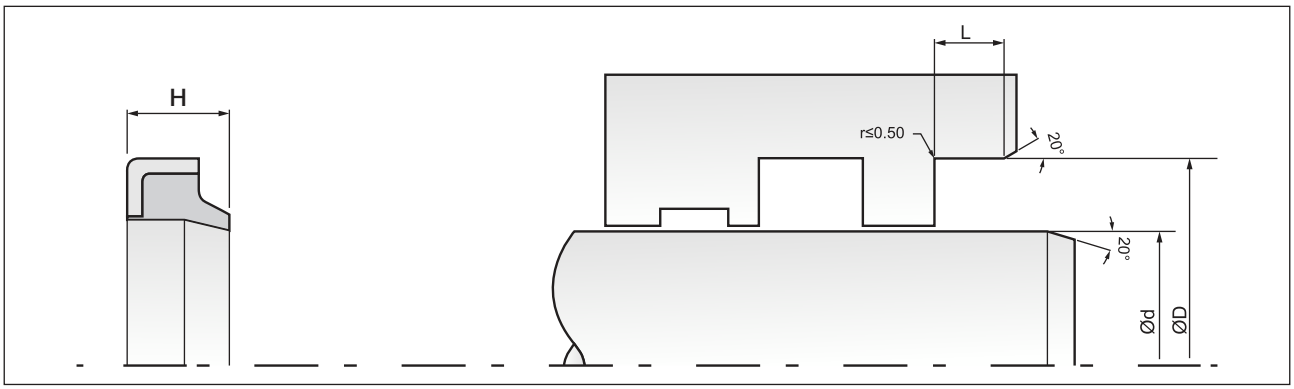

Part No.	d (f8)	D (H9)	L (+0.2)	H	Matl.	Mould No.
W140191110	19.05	26.98	4.00	6.00	NBR	WPS-4792
W14019T201	19.05	27.00	4.75	6.00	VMQ	WPS-2027
W140190801	**19.05**	**28.00**	**5.00**	**8.00**	**NBR**	**WPS-551**
W14019V204	19.05	28.00	5.00	8.00	NBR	WPS-5148
W140190801	**19.05**	**28.00**	**5.00**	**8.00**	**NBR**	**WPS-3391**
W140191111	19.05	31.50	7.00	9.00	NBR	WPS-6655
W140201128	20.00	26.00	3.00	5.00	NBR	WPS-5235
W140201123	20.00	26.00	4.00	6.00	NBR	WPS-4662
W140201123	20.00	26.00	4.00	6.00	NBR	WPS-4639
W140201118	20.00	26.00	4.00	7.00	NBR	WPS-4212
W140201101	20.00	26.00	5.00	8.00	NBR	WPS-861
W140205904	20.00	28.00	2.50	5.00	PU	WPH-650
W140201102	**20.00**	**28.00**	**3.50**	**5.00**	**NBR**	**WPS-862**
W140201132	20.00	28.00	4.00	7.00	NBR	WPS-5763
W140201114	20.00	28.00	5.00	7.00	NBR	WPS-3372
W140201103	**20.00**	**28.00**	**5.00**	**8.00**	**NBR**	**WPS-620**
W140206702	20.00	28.00	5.00	8.00	FKM	WPS-4660
W140206702	20.00	28.00	5.00	8.00	FKM	WPS-4643
W140205903	20.00	30.00	2.50	5.00	PU	WPH-651
W140201108	20.00	30.00	4.00	6.00	NBR	WPS-1367
W140201120	20.00	30.00	4.00	6.00	NBR	WPS-4186
W140201130	20.00	30.00	5.00	7.00	NBR	WPS-5459
W140201121	20.00	30.00	5.00	8.00	NBR	WPS-4187
W140201124	20.00	30.00	5.00	9.00	NBR	WPS-4679
W140201113	20.00	30.00	7.00	10.00	NBR	WPS-2952
W140201119	20.00	30.00	7.00	10.00	NBR	WPS-4188
W14020L501	20.00	30.00	7.00	10.00	PU	WPH-1902
W140201105	**20.00**	**30.00**	**7.00**	**10.00**	**NBR**	**WPS-2623**
W14020L501	20.00	30.00	7.00	10.00	PU	WPH-1889
W140201122	20.00	32.00	5.00	7.00	NBR	WPS-4590
W140201131	20.00	32.00	7.00	10.00	NBR	WPS-5510
W140201133	20.00	33.00	5.00	7.00	NBR	WPS-7126
W140201104	20.00	35.00	5.00	8.00	NBR	WPS-3856
W140201127	20.00	35.00	7.00	10.00	NBR	WPS-5178
W140201125	20.00	35.50	7.00	10.00	NBR	WPS-4794
W140201115	20.00	50.00	7.00	10.00	NBR	WPS-3713
W140216601	21.00	32.00	5.00	7.00	FKM	WPS-6579
W14022L501	22.00	28.00	5.00	8.00	PU	WPH-1013
W140221101	**22.00**	**28.00**	**5.00**	**8.00**	**NBR**	**WPS-217**
W140221114	22.00	28.00	5.00	8.00	NBR	WPS-6537
W140221105	22.00	28.00	5.00	9.00	NBR	WPS-3317
W140221107	22.00	28.00	5.00	9.00	NBR	WPS-4198
W140221106	22.00	30.00	4.00	7.00	NBR	WPS-3979
W140221109	22.00	30.00	5.00	8.00	NBR	WPS-4460
W140226703	22.00	30.65	4.00	7.00	FKM	WPS-4991
W140221113	22.00	32.00	4.00	6.00	NBR	WPS-6178
W140226701	22.00	32.00	5.00	7.00	FKM	WPS-3396
W140221111	22.00	32.00	5.00	7.00	NBR	WPS-5460
W140221110	22.00	32.00	5.00	8.00	NBR	WPS-5367
W140221108	22.00	32.00	7.00	10.00	NBR	WPS-4199
W140221102	**22.00**	**32.00**	**7.00**	**10.00**	**NBR**	**WPS-1082**
W140226702	22.00	32.00	7.00	10.00	FKM	WPS-4439

Part No.	d (f8)	D (H9)	L (+0.2)	H	Matl.	Mould No.
W140221112	22.00	35.00	5.00	7.00	NBR	WPS-5688
W140231102	23.00	28.00	3.50	5.00	NBR	WPS-4674
W140246601	24.00	32.00	7.50	9.50	FKM	WPS-7036
W140241102	24.00	35.00	5.00	8.00	NBR	WPS-5794
W140241105	24.00	35.00	5.00	8.00	NBR	WPS-6731
W140241103	24.00	35.00	7.00	10.00	NBR	WPS-6698
W140251130	25.00	32.00	3.20	4.50	NBR	WPS-7317
W140251128	25.00	32.00	5.00	7.00	NBR	WPS-3126
W140251122	25.00	33.00	3.00	5.00	NBR	WPS-1430
W140251119	25.00	33.00	4.00	7.00	NBR	WPS-4140
W140251132	25.00	33.00	5.00	7.00	NBR	WPS-7504
W140256701	25.00	34.00	5.00	7.00	FKM	WPS-3731
W140251102	**25.00**	**35.00**	**5.00**	**7.00**	**NBR**	**WPS-1366**
W140251113	25.00	35.00	5.00	7.50	NBR	WPS-2978
W140251116	25.00	35.00	5.00	8.00	NBR	WPS-3462
W140251121	25.00	35.00	5.00	8.00	NBR	WPS-4183
W140251117	25.00	35.00	7.00	8.75	NBR	WPS-123
W140251101	**25.00**	**35.00**	**7.00**	**10.00**	**NBR**	**WPS-754**
W140251112	25.00	35.00	7.00	10.00	NBR	WPS-2953
W14025L501	25.00	35.00	7.00	10.00	PU	WPH-2034
W140251120	25.00	35.00	7.00	10.00	NBR	WPS-4182
W140251103	25.00	36.00	6.00	7.00	NBR	WPS-3857
W140251118	25.00	36.00	7.00	10.00	NBR	WPS-4088
W140251125	25.00	37.00	5.00	7.00	NBR	WPS-5461
W140254601	25.00	37.00	5.00	8.00	VMQ	WPS-6452
W140255905	25.00	37.00	5.00	9.00	PU	WPH-1205
W14025L502	25.00	37.00	6.50	8.50	PU	WPH-2113
W140251131	25.00	38.00	4.00	7.00	NBR	WPS-7385
W140251123	25.25	33.34	4.00	6.00	NBR	WPS-4820
W140251129	25.25	35.25	5.00	8.00	NBR	WPS-6696
W140251110	25.40	32.50	3.50	5.00	NBR	WPS-2208
W14025V203	25.40	33.35	4.00	6.00	NBR	WPS-3961
W140251111	25.40	34.92	5.00	7.00	NBR	WPS-2214
W14025V205	25.40	35.35	5.00	8.00	NBR	WPS-5337
W140251124	25.40	36.00	4.00	6.00	NBR	WPS-4890
W140250801	**25.40**	**36.00**	**5.00**	**8.00**	**NBR**	**WPS-550**
W14025V204	25.40	36.00	5.00	8.00	NBR	WPS-5147
W140250801	25.40	36.00	5.00	8.00	NBR	WPS-3365
W140251127	25.40	36.00	5.00	8.00	NBR	WPS-6443
W140251001	25.40	38.10	6.35	7.62	NBR	WPS-823
W140261101	26.00	36.00	5.00	8.00	NBR	WPS-5892
W140271101	27.40	35.40	5.00	7.50	NBR	WPS-5589
W140276701	27.65	36.05	4.70	7.50	FKM	WPS-5658
W140281111	28.00	32.00	4.00	6.00	NBR	WPS-5625
W140281112	28.00	34.70	4.00	7.00	NBR	WPS-6565
W140286702	28.00	35.00	5.00	7.00	FKM	WPS-4625
W140281109	28.00	36.00	5.00	8.00	NBR	WPS-5121
W140286704	28.00	38.00	5.00	7.00	FKM	WPS-5896
W140286703	28.00	38.00	5.00	8.00	FKM	WPS-5075
W140281101	28.00	38.00	5.00	8.00	NBR	WPS-115
W140281102	28.00	38.00	7.00	10.00	NBR	WPS-222
W140285902	28.00	38.00	7.00	10.00	PU	WPH-1272

Bold sizes are readily available in stock.
Other materials are available on request.

W14

Heavy Duty Wiper Seal

MAX SPARE LIMITED
QUALITY. PRECISION. SPEED.

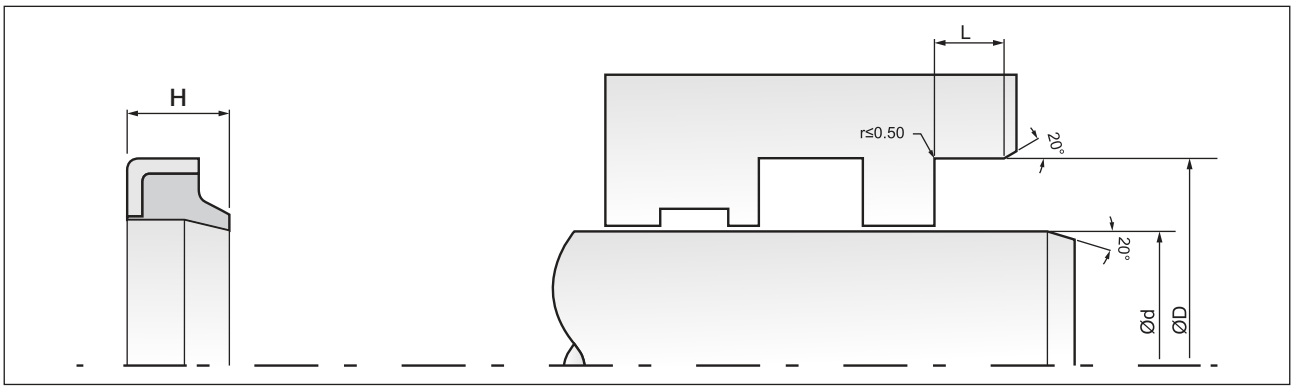

Part No.	d (f8)	D (H9)	L (+0.2)	H	Matl.	Mould No.
W140286701	28.00	38.10	4.76	8.71	FKM	WPS-5228
W140281110	28.00	40.00	6.50	9.00	NBR	WPS-5604
W140281104	28.00	40.00	7.00	10.00	NBR	WPS-610
W140161129	28.00	40.00	7.00	10.00	NBR	WPS-7407
W140286706	28.00	40.00	7.00	10.00	FKM	WPS-7498
W140285901	28.00	42.00	5.00	7.00	PU	WPH-1209
W140281105	28.00	42.00	7.00	10.00	NBR	WPS-4275
W140281108	28.00	47.00	7.00	10.00	NBR	WPS-4155
W140281107	28.57	38.10	4.76	8.71	NBR	WPS-2144
W140301110	30.00	37.20	4.00	6.00	NBR	WPS-4581
W140301121	30.00	38.00	5.00	7.00	NBR	WPS-7073
W14030L503	30.00	38.00	5.00	7.00	PU	WPH-2763
W140301113	30.00	40.00	5.00	7.00	NBR	WPS-5462
W140301108	30.00	40.00	5.00	8.00	NBR	WPS-4189
W140306702	30.00	40.00	5.00	8.00	FKM	WPS-3514
W140301102	**30.00**	**40.00**	**5.00**	**8.00**	**NBR**	**WPS-863**
W140306703	30.00	40.00	6.00	10.00	FKM	WPS-4650
W140301101	**30.00**	**40.00**	**7.00**	**10.00**	**NBR**	**WPS-636**
W140308701	30.00	40.00	7.00	10.00	PU	WPH-2067
W140301109	30.00	40.00	7.00	10.00	NBR	WPS-4190
W140301106	30.00	40.00	7.00	10.00	NBR	WPS-3486
W140301114	30.00	42.00	5.00	7.00	NBR	WPS-5463
W140301107	30.00	42.00	5.00	8.00	NBR	WPS-4019
W140301119	30.00	42.00	7.00	10.00	NBR	WPS-3446
W140301111	30.00	42.00	9.00	11.00	NBR	WPS-4637
W140306704	30.00	43.00	6.50	7.00	FKM	WPS-5015
W140301117	30.00	43.00	7.00	10.00	NBR	WPS-5980
W140301112	30.00	43.00	10.00	14.00	NBR	WPS-5016
W140301105	30.00	44.00	7.00	10.00	NBR	WPS-3214
W140301115	30.00	45.00	5.00	7.00	NBR	WPS-5464
W140301104	30.00	45.00	5.00	8.00	FKM	WPS-1208
W140301116	30.00	45.00	5.00	8.00	NBR	WPS-5875
W140301118	30.00	45.00	7.00	10.00	NBR	WPS-6136
W140301120	30.50	40.00	5.00	8.00	NBR	WPS-6606
W14032L501	32.00	40.00	4.00	7.00	PU	WPH-2325
W140325901	32.00	40.00	5.00	7.00	PU	WPH-1876
W140321117	32.00	40.00	5.00	7.00	NBR	WPS-6058
W14030L502	32.00	40.00	6.00	10.00	PU	WPH-1824
W14032L505	32.00	40.00	7.00	10.00	PU	WPH-2455
W140321105	32.00	42.00	5.00	7.00	NBR	WPS-1332
W140321110	32.00	42.00	5.00	7.00	NBR	WPS-4200
W140321116	32.00	42.00	5.00	8.00	NBR	WPS-5810
W140321106	32.00	42.00	7.00	10.00	NBR	WPS-864
W140326702	32.00	42.00	7.00	10.00	FKM	WPS-4440
W140321109	32.00	42.00	7.00	10.00	NBR	WPS-4191
W140321107	32.00	45.00	4.00	8.00	NBR	WPS-3725
W140321103	32.00	45.00	5.00	7.00	NBR	WPS-5865
W140321118	32.00	45.00	7.00	9.00	NBR	WPS-7123
W140321112	32.00	45.00	7.00	10.00	NBR	WPS-4945
W140321104	**32.00**	**45.00**	**7.00**	**10.00**	**NBR**	**WPS-635**
W14032L502	32.00	45.00	7.00	10.00	PU	WPH-2368
W140321113	32.00	46.00	7.00	10.00	NBR	WPS-5557

Part No.	d (f8)	D (H9)	L (+0.2)	H	Matl.	Mould No.
W140321111	32.00	52.00	8.00	11.00	NBR	WPS-4477
W140331101	33.00	40.00	5.00	7.00	NBR	WPS-6989
W140331102	33.00	42.00	5.00	7.00	NBR	WPS-6990
W140356703	35.00	43.00	5.00	7.00	FKM	WPS-6991
W140351113	35.00	45.00	5.00	7.00	NBR	WPS-5465
W140356702	35.00	45.00	7.00	10.00	FKM	WPS-2868
W140351102	**35.00**	**45.00**	**7.00**	**10.00**	**NBR**	**WPS-446**
W140351109	35.00	45.00	7.00	10.00	NBR	WPS-2954
W140351110	35.00	45.00	7.00	10.00	NBR	WPS-4181
W14035L501	35.00	45.00	7.00	10.00	PU	WPH-2531
W140351112	35.00	47.00	3.00	7.00	NBR	WPS-5084
W140351114	35.00	47.00	5.00	7.00	NBR	WPS-5466
W14035L502	35.00	47.00	7.00	9.50	PU	WPH-2112
W140351111	35.00	47.00	7.00	10.00	NBR	WPS-5394
W140356704	35.00	47.00	7.00	10.00	FKM	WPS-7461
W140351108	35.00	53.00	5.00	9.00	NBR	WPS-2626
W140361110	36.00	45.00	5.00	7.00	NBR	WPS-6638
W140361116	36.00	45.00	5.00	8.00	NBR	WPS-7076
W140361109	36.00	45.00	6.00	9.00	NBR	WPS-6299
W140361101	**36.00**	**45.00**	**7.00**	**10.00**	**NBR**	**WPS-688**
W14036L502	36.00	45.00	7.00	10.00	PU	WPH-1515
W140361107	36.00	45.00	7.00	10.00	NBR	WPS-4201
W140361101	36.00	45.00	7.00	10.00	NBR	WPS-6707
W140361108	36.00	46.00	5.00	7.00	NBR	WPS-6012
W140361115	36.00	46.00	5.00	8.00	NBR	WPS-6859
W14036L501	36.00	47.00	5.00	8.00	PU	WPH-621
W140361106	**36.00**	**48.00**	**5.00**	**8.00**	**NBR**	**WPS-604**
W14036L503	36.00	48.00	7.00	10.00	PU	WPH-1838
W140371101	37.00	47.00	7.00	10.00	NBR	WPS-4556
W140371102	37.00	50.00	5.00	9.00	NBR	WPS-5722
W140381107	38.00	47.63	5.00	7.00	NBR	WPS-5468
W140381109	38.00	50.00	5.00	9.00	NBR	WPS-5958
W140386702	38.00	50.00	7.00	10.00	FKM	WPS-6754
W140381103	38.00	52.00	4.00	6.00	NBR	WPS-3371
W140381105	38.00	53.00	7.00	10.00	NBR	WPS-4884
W140381110	38.00	55.00	6.50	8.50	NBR	WPS-6958
W140381106	38.00	57.00	5.00	7.00	NBR	WPS-5467
W140385901	38.10	47.62	4.76	7.54	PU	WPH-1990
W140391101	39.00	50.00	9.00	12.00	NBR	WPS-3858
W140401121	40.00	46.00	3.00	4.50	NBR	WPS-5815
W140401125	40.00	47.00	3.50	5.00	NBR	WPS-6670
W140406709	40.00	47.00	5.00	7.00	FKM	WPS-7161
W140401122	40.00	48.00	4.50	6.50	NBR	WPS-5855
W140401113	40.00	48.00	5.00	7.00	NBR	WPS-3729
W140401110	40.00	48.60	5.00	7.00	NBR	WPS-2434
W140401119	40.00	50.00	3.00	7.00	NBR	WPS-5220
W140401120	40.00	50.00	4.00	6.00	NBR	WPS-5355
W140406401	40.00	50.00	4.50	6.60	FKM	WPS-7174
W14040L501	40.00	50.00	5.00	7.00	PU	WPH-1284
W140401101	40.00	50.00	5.00	7.00	NBR	WPS-895
W140401102	**40.00**	**50.00**	**5.00**	**8.00**	**NBR**	**WPS-1338**
W140401115	40.00	50.00	5.00	8.00	NBR	WPS-4185

Bold sizes are readily available in stock.
Other materials are available on request.

MAX SPARE LIMITED
QUALITY. PRECISION. SPEED.

W14

Heavy Duty Wiper Seal

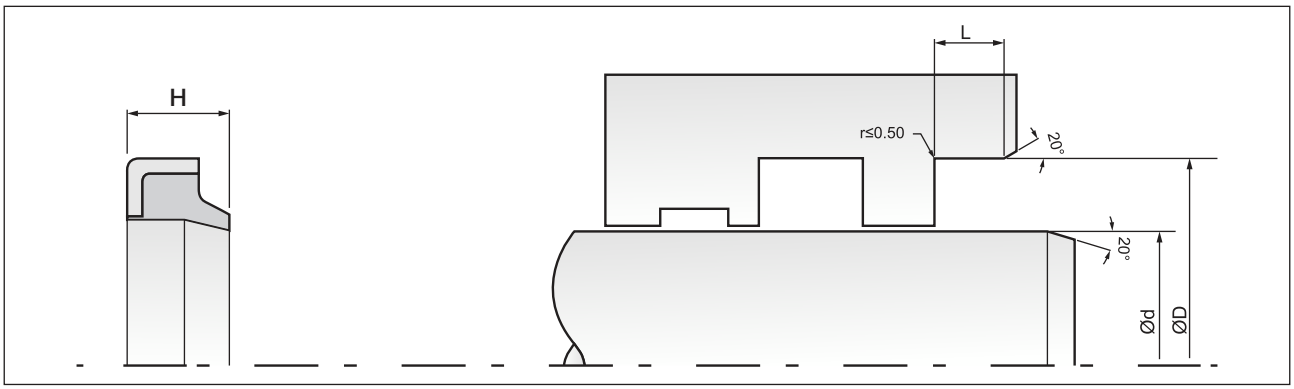

Part No.	d (f8)	D (H9)	L (+0.2)	H	Matl.	Mould No.
W140406708	40.00	50.00	5.00	8.00	FKM	WPS-6643
W140401103	**40.00**	**50.00**	**7.00**	**10.00**	**NBR**	**WPS-576**
W140401123	40.00	50.00	7.00	10.00	NBR	WPS-5856
W14040L502	40.00	50.00	7.00	10.00	PU	WPH-1842
W140406703	40.00	50.00	7.00	10.00	FKM	WPS-3088
W140401114	40.00	50.00	7.00	10.00	NBR	WPS-4180
W140401111	40.00	50.00	9.00	12.00	NBR	WPS-2443
W140401124	40.00	50.50	7.00	10.00	NBR	WPS-6150
W140401117	40.00	52.00	5.00	7.00	NBR	WPS-4401
W140401118	40.00	52.00	5.00	8.00	NBR	WPS-4840
W140401105	40.00	52.00	7.00	10.00	NBR	WPS-220
W140401116	40.00	52.00	7.00	10.00	NBR	WPS-4202
W140405901	40.00	52.00	7.00	10.00	PU	WPH-1106
W140401126	40.00	60.00	10.00	15.00	NBR	WPS-7120
W140401112	40.00	90.00	7.00	10.00	NBR	WPS-3719
W140421103	42.00	50.00	7.00	10.00	NBR	WPS-3850
W140426701	42.00	52.00	5.00	7.00	FKM	WPS-5308
W140421101	42.00	52.00	7.00	10.00	PU	WPS-1337
W140421104	42.00	52.00	7.50	10.50	NBR	WPS-4667
W140421102	42.00	59.00	7.00	10.00	NBR	WPS-3810
W140441105	44.00	52.00	4.00	6.00	NBR	WPS-4715
W140441107	44.40	63.40	9.50	12.00	NBR	WPS-6583
W140446702	44.45	53.18	6.35	9.12	FKM	WPS-5156
W140441106	44.45	53.97	4.77	7.13	NBR	WPS-5577
W140441101	44.45	53.97	5.56	7.36	NBR	WPS-680
W140451119	45.00	51.00	4.50	6.00	NBR	WPS-7065
W140451109	45.00	52.00	4.00	8.00	NBR	WPS-3726
W140451110	45.00	53.00	4.00	7.00	NBR	WPS-4141
W140451116	45.00	53.50	5.00	8.00	NBR	WPS-5371
W14045L506	45.00	53.50	5.00	8.00	PU	WPH-2460
W140451114	45.00	54.00	5.00	7.00	NBR	WPS-5295
W140456702	45.00	54.00	5.00	8.00	FKM	WPS-5376
W140451106	45.00	55.00	5.00	7.00	NBR	WPS-722
W140451121	45.00	55.00	5.00	8.00	NBR	WPS-7344
W140451104	45.00	55.00	7.00	10.00	NBR	WPS-4272
W140451101	**45.00**	**55.00**	**7.00**	**10.00**	**NBR**	**WPS-444**
W14045L501	45.00	55.00	7.00	10.00	PU	WPH-792
W140451111	45.00	55.00	7.00	10.00	NBR	WPS-4192
W140456704	45.00	55.00	8.00	10.00	FKM	WPS-6457
W140451115	45.00	55.00	11.50	16.00	NBR	WPS-5324
W140451118	45.00	55.60	5.30	7.00	NBR	WPS-5824
W140451117	45.00	57.00	5.00	7.00	NBR	WPS-5469
W140451113	45.00	57.00	7.00	10.00	NBR	WPS-4203
W14045110	45.00	57.00	7.00	10.00	NBR	WPS-7363
W140451120	45.00	58.00	7.00	10.00	NBR	WPS-7136
W140458701	45.00	60.00	4.00	6.00	PU	WPH-2574
W140455901	45.00	60.00	5.00	8.00	PU	WPH-1012
W14045L503	45.00	60.00	7.00	10.00	PU	WPH-1027
W140451112	45.00	60.00	7.00	10.00	NBR	WPS-4204
W140451103	**45.00**	**60.00**	**7.00**	**10.00**	**NBR**	**WPS-180**
W140471101	47.62	60.72	5.00	7.00	NBR	WPS-5470
W140486701	48.00	60.00	7.00	8.00	FKM	WPS-3331

Part No.	d (f8)	D (H9)	L (+0.2)	H	Matl.	Mould No.
W140481102	48.00	60.00	7.00	10.00	NBR	WPS-6068
W140481103	48.00	60.00	7.00	10.00	NBR	WPS-6403
W140496601	49.60	60.00	7.00	10.00	FKM	WPS-7406
W140491101	49.60	72.00	7.00	10.00	NBR	WPS-7405
W140504601	50.00	56.00	5.00	7.00	VMQ	WPS-3382
W140501110	50.00	56.00	5.00	8.00	NBR	WPS-4193
W140501122	50.00	56.00	5.00	10.00	NBR	WPS-6289
W140506712	50.00	56.00	5.00	17.00	FKM	WPS-6383
W140501117	50.00	56.00	5.50	7.00	NBR	WPS-4967
W140506708	50.00	57.50	5.00	7.00	FKM	WPS-5391
W140506601	50.00	58.00	5.00	7.00	FKM	WPS-1357
W140506706	50.00	58.00	8.00	10.00	FKM	WPS-5131
W140506711	50.00	58.40	5.00	6.00	FKM	WPS-6316
W140506704	50.00	59.00	5.00	7.00	FKM	WPS-4128
W140506710	50.00	60.00	4.00	7.00	FKM	WPS-6108
W140506501	50.00	60.00	4.50	6.60	FKM	WPS-6324
W140501111	50.00	60.00	5.00	7.00	NBR	WPS-4205
W140501107	50.00	60.00	5.00	8.00	NBR	WPS-2612
W140505902	50.00	60.00	7.00	10.00	PU	WPH-492
W14050L501	50.00	60.00	7.00	10.00	PU	WPH-1816
W140506705	50.00	60.00	7.00	10.00	FKM	WPS-4443
W140501103	**50.00**	**60.00**	**7.00**	**10.00**	**NBR**	**WPS-633**
W140505908	50.00	60.00	7.00	10.00	PU	WPH-2737
W140506713	50.00	60.00	7.00	10.00	FKM	WPS-6777
W140501109	50.00	60.00	7.00	10.00	NBR	WPS-4184
W140501120	50.00	60.00	7.00	11.00	NBR	WPS-5672
W140501116	50.00	60.00	8.00	11.00	NBR	WPS-1797
W140506709	50.00	60.00	8.00	12.00	FKM	WPS-6067
W140501118	50.00	62.00	5.00	7.00	NBR	WPS-5270
W140501114	50.00	62.00	5.00	8.00	NBR	WPS-4457
W140501113	50.00	62.00	5.00	9.00	NBR	WPS-4259
W14050L502	50.00	62.00	7.00	10.00	PU	WPH-1839
W140505905	50.00	62.00	7.50	10.00	PU	WPH-1897
W140505905	50.00	62.00	7.50	10.00	PU	WPH-1897
W140501102	50.00	63.50	8.00	12.00	NBR	WPS-4273
W140501121	50.00	64.00	7.50	10.00	NBR	WPS-5744
W14050L503	50.00	64.50	8.00	11.00	PU	WPH-2213
W140501119	50.00	65.00	5.00	7.00	NBR	WPS-5471
W140501112	50.00	65.00	7.00	10.00	NBR	WPS-4207
W140501105	50.00	65.00	7.00	10.00	NBR	WPS-865
W140501115	50.00	65.00	10.50	20.00	NBR	WPS-4721
W140501104	50.00	70.00	7.00	10.00	NBR	WPS-3859
W140501123	50.00	72.00	5.00	10.00	NBR	WPS-6349
W140505906	50.80	63.50	6.35	7.93	PU	WPH-2423
W140505907	50.80	63.50	7.00	10.00	PU	WPH-2718
W140505904	50.80	68.26	7.94	9.52	PU	WPH-1210
W14051L501	51.00	73.00	7.00	10.00	PU	WPH-2831
W140521101	52.00	62.00	7.00	10.00	NBR	WPS-6658
W140521102	52.00	66.00	7.00	10.00	NBR	WPS-6981
W140531101	53.99	69.83	7.00	10.00	NBR	WPS-5474
W140551105	55.00	60.00	7.00	10.00	NBR	WPS-3714
W140551103	55.00	63.00	7.00	10.00	NBR	WPS-977

Bold sizes are readily available in stock.
Other materials are available on request.

W14

Heavy Duty Wiper Seal

MAX SPARE LIMITED
QUALITY. PRECISION. SPEED.

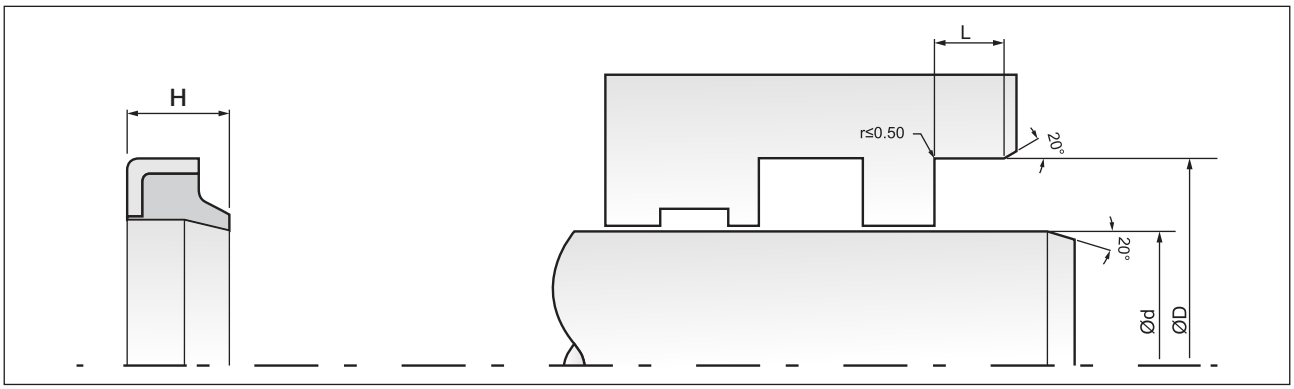

Part No.	d (f8)	D (H9)	L (+0.2)	H	Matl.	Mould No.
W14055L501	55.00	63.00	7.00	10.00	PU	WPH-1865
W140551107	55.00	65.00	5.00	7.00	NBR	WPS-5472
W140551102	**55.00**	**65.00**	**7.00**	**10.00**	**NBR**	**WPS-1346**
W140551106	55.00	65.00	7.00	10.00	NBR	WPS-4206
W140556701	55.00	65.00	7.00	10.00	FKM	WPS-4442
W140551109	55.00	66.00	5.00	7.00	NBR	WPS-1849
W140551108	55.00	69.00	7.00	10.00	NBR	WPS-5473
W140555901	55.00	69.00	8.00	11.00	PU	WPH-1207
W140551110	55.00	70.00	5.00	7.00	NBR	WPS-6261
W140551104	55.00	70.00	7.00	10.00	NBR	WPS-3601
W140561104	56.00	65.00	7.00	10.00	NBR	WPS-3046
W14056L502	56.00	65.00	7.00	10.00	PU	WPH-2363
W140561106	56.00	66.00	5.00	7.00	NBR	WPS-3611
W140566706	56.00	66.00	5.00	7.00	FKM	WPS-3579
W140561105	56.00	66.00	5.00	8.00	NBR	WPS-1821
W140566704	56.00	66.00	6.00	8.00	FKM	WPS-2677
W14056L501	56.00	66.00	7.00	10.00	PU	WPH-1041
W140566701	56.00	66.00	7.00	10.00	FKM	WPS-4409
W140561102	**56.00**	**66.00**	**7.00**	**10.00**	**NBR**	**WPS-518**
W140561108	56.00	68.00	5.00	8.00	NBR	WPS-5209
W140561110	56.00	68.00	7.00	9.80	NBR	WPS-5332
W140561109	56.00	68.00	8.00	10.00	NBR	WPS-5284
W140556705	56.00	70.00	5.00	8.00	FKM	WPS-704
W14057L502	57.00	67.00	5.00	7.00	PU	WPH-2602
W140571102	57.00	67.00	7.00	10.00	NBR	WPS-6898
W140575902	57.15	76.20	9.98	11.50	PU	WPH-1211
W140571101	57.15	76.25	5.00	7.00	NBR	WPS-5475
W140601115	60.00	68.00	8.70	12.00	NBR	WPS-5830
W140601101	60.00	70.00	5.00	7.00	NBR	WPS-866
W140601110	60.00	70.00	5.00	8.00	NBR	WPS-3718
W140601102	**60.00**	**70.00**	**7.00**	**10.00**	**NBR**	**WPS-386**
W140601111	60.00	70.00	7.00	10.00	NBR	WPS-4194
W14060R301	60.00	70.00	7.00	10.00	PU	WPH-1369
W140601119	60.00	70.00	7.00	10.00	NBR	WPS-7049
W14060L502	60.00	70.00	7.00	10.00	PU	WPH-2367
W140601112	60.00	72.00	7.00	10.00	NBR	WPS-5062
W140606702	60.00	73.50	8.20	12.00	FKM	WPS-5321
W140601113	60.00	74.00	5.00	7.00	NBR	WPS-5476
W140601116	60.00	74.00	5.00	8.00	NBR	WPS-6080
W140606703	60.00	74.00	8.00	14.00	FKM	WPS-5749
W140600801	60.00	75.00	6.60	9.00	NBR	WPS-3759
W140601117	60.00	75.00	7.00	10.00	NBR	WPS-6168
W140601120	60.00	80.00	10.00	15.00	NBR	WPS-7189
W140616701	61.50	76.00	8.00	12.00	FKM	WPS-3878
W140621101	62.00	72.00	7.00	10.00	NBR	WPS-162
W140631109	63.00	73.00	5.00	7.00	NBR	WPS-5477
W140631105	**63.00**	**73.00**	**7.00**	**10.00**	**NBR**	**WPS-1846**
W140631105	63.00	73.00	7.00	10.00	NBR	WPS-5004
W140636702	63.00	73.00	7.00	10.00	FKM	WPS-4696
W14063L503	63.00	73.00	7.00	10.00	PU	WPH-2567
W140631108	63.00	74.00	5.10	8.00	NBR	WPS-5296
W140636703	63.00	74.50	5.50	8.50	FKM	WPS-4783

Part No.	d (f8)	D (H9)	L (+0.2)	H	Matl.	Mould No.
W140631111	63.00	75.00	5.00	7.00	NBR	WPS-5479
W14063L501	63.00	75.00	7.00	10.00	PU	WPH-1283
W140636701	63.00	75.00	7.00	10.00	FKM	WPS-3510
W140631106	63.00	75.00	7.00	10.00	NBR	WPS-4211
W140631101	**63.00**	**75.00**	**7.00**	**10.00**	**NBR**	**WPS-663**
W140631112	63.40	75.00	9.50	14.00	NBR	WPS-5414
W140631107	63.50	76.00	8.00	11.00	NBR	WPS-5222
W140631114	63.50	76.20	6.35	9.52	NBR	WPS-6499
W140631110	63.50	76.20	7.00	10.00	NBR	WPS-5478
W140631113	63.50	78.30	8.00	11.00	NBR	WPS-5814
W140635901	63.50	82.55	9.98	12.00	PU	WPH-1212
W140631115	63.50	95.25	12.70	18.00	NBR	WPS-6804
W140651108	65.00	74.00	5.00	7.00	NBR	WPS-5480
W140651107	65.00	75.00	7.00	10.00	NBR	WPS-4195
W14065L502	65.00	75.00	7.00	10.00	PU	WPH-2044
W140651101	**65.00**	**75.00**	**7.00**	**10.00**	**NBR**	**WPS-566**
W140652201	65.00	81.00	9.00	11.50	CR	WPS-6392
W140681101	68.00	75.00	5.00	7.00	NBR	WPS-4080
W140696701	69.50	85.00	9.00	12.00	FKM	WPS-3879
W140701107	70.00	80.00	5.00	7.00	NBR	WPS-2801
W140701116	70.00	80.00	6.00	8.00	NBR	WPS-7421
W140701101	**70.00**	**80.00**	**7.00**	**10.00**	**NBR**	**WPS-631**
W140701108	70.00	80.00	7.00	10.00	NBR	WPS-4196
W14070L502	70.00	80.00	7.00	10.00	PU	WPH-2366
W140701102	70.00	82.00	7.00	10.00	NBR	WPS-984
W14070L503	70.00	82.00	7.00	10.00	PU	WPH-2762
W140706702	70.00	82.00	9.00	13.00	FKM	WPS-3367
W140701103	70.00	83.00	7.00	10.00	NBR	WPS-3860
W140701114	70.00	83.55	8.25	12.00	NBR	WPS-6935
W14070L501	70.00	84.00	4.00	7.00	PU	WPH-620
W140701113	70.00	84.00	7.00	10.00	NBR	WPS-5482
W140701112	70.00	85.00	7.00	10.00	NBR	WPS-5481
W140701109	70.00	90.00	7.00	10.00	NBR	WPS-4366
W140701109.	70.00	90.00	7.00	10.00	NBR	WPS-6619
W140701106	70.00	90.00	10.00	12.00	NBR	WPS-3844
W140701111	70.00	90.00	10.00	14.00	NBR	WPS-5097
W140721101	72.00	82.00	7.00	10.00	NBR	WPS-6744
W140721102	72.00	84.00	5.00	8.00	NBR	WPS-7257
W140751110	75.00	83.00	7.00	10.00	NBR	WPS-6094
W140751107	75.00	85.00	6.50	10.00	NBR	WPS-5063
W140751113	75.00	85.00	6.50	10.00	NBR	WPS-7393
W140755901	75.00	85.00	7.00	10.00	PU	WPH-2387
W140751106	75.00	85.00	7.00	10.00	NBR	WPS-4208
W140751101	**75.00**	**85.00**	**7.00**	**10.00**	**NBR**	**WPS-105**
W140751112	75.00	85.00	7.00	10.00	NBR	WPS-7369
W140756701	75.00	85.00	7.00	10.00	FKM	WPS-4896
W14075L505	75.00	87.00	5.00	7.00	PU	WPH-770
W140751111	75.00	87.00	5.00	7.00	NBR	WPS-6416
W140751105	75.00	87.00	7.00	10.00	NBR	WPS-2658
W140751109	75.00	89.00	7.00	10.00	NBR	WPS-5499
W140755902	75.00	90.00	7.00	12.00	PU	WPH-2717
W140751108	75.00	100.00	9.00	12.00	NBR	WPS-5218

Bold sizes are readily available in stock.
Other materials are available on request.

W14

Heavy Duty Wiper Seal

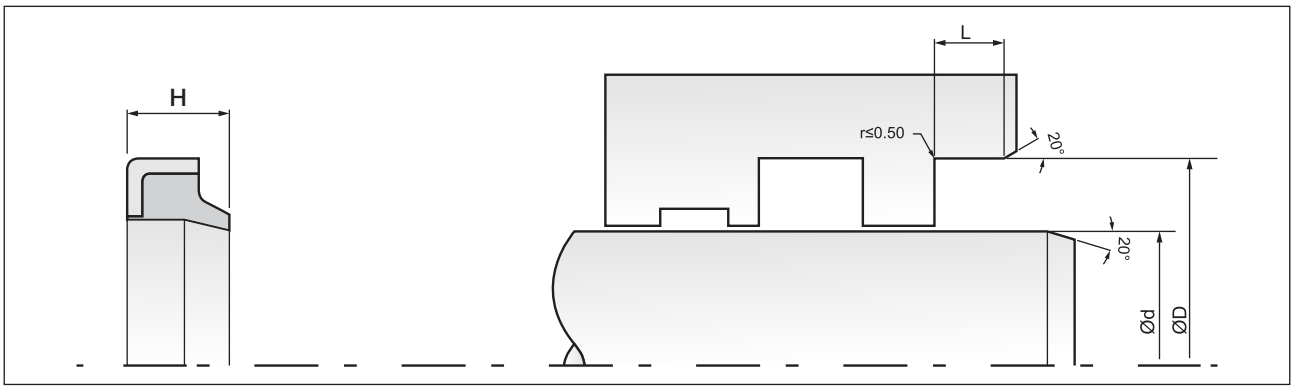

Part No.	d (f8)	D (H9)	L (+0.2)	H	Matl.	Mould No.
W140761001	76.20	88.90	7.93	11.11	NBR	WPS-717
W140761102	76.20	101.60	7.00	10.00	NBR	WPS-5500
W140801108	80.00	88.00	7.00	10.00	NBR	WPS-5483
W14080L503	80.00	90.00	7.00	10.00	PU	WPH-1127
W140801101	**80.00**	**90.00**	**7.00**	**10.00**	**NBR**	**WPS-445**
W140801107	80.00	90.50	7.00	10.00	NBR	WPS-4038
W14080L507	80.00	92.00	5.50	10.00	PU	WPH-2839
W140801109	80.00	94.00	7.00	10.00	NBR	WPS-5484
W140801102	80.00	95.00	7.00	10.00	NBR	WPS-154
W14080L505	80.00	96.00	8.00	10.00	PU	WPH-2626
W14080L506	80.00	100.00	7.00	10.00	PU	WPH-2782
W140801111	80.00	100.00	8.00	15.00	NBR	WPS-6073
W140801105	80.00	100.00	12.00	15.00	NBR	WPS-3720
W140826701	82.55	92.55	7.00	10.00	FKM	WPS-5182
W140821101	82.55	95.25	7.00	10.00	NBR	WPS-5485
W140826702	82.55	101.60	12.70	14.00	FKM	WPS-6687
W140851101	**85.00**	**95.00**	**7.00**	**10.00**	**NBR**	**WPS-1044**
W140856702	85.00	95.00	7.00	10.00	FKM	WPS-4247
W140851102	85.00	99.00	7.00	10.00	NBR	WPS-5486
W140881103	88.90	101.60	7.00	10.00	NBR	WPS-5487
W140881102	88.90	104.77	7.93	11.11	NBR	WPS-716
W140905901	90.00	98.00	5.00	7.00	PU	WPH-1208
W140901106	90.00	100.00	4.00	7.00	NBR	WPS-4898
W140906703	90.00	100.00	5.00	8.00	FKM	WPS-6163
W140906401	90.00	100.00	6.00	10.00	FKM	WPS-2516
W14090L501	90.00	100.00	7.00	9.50	PU	WPH-629
W140901101	**90.00**	**100.00**	**7.00**	**10.00**	**NBR**	**WPS-158**
W140901104	90.00	100.00	7.00	10.00	NBR	WPS-4197
W140906701	90.00	100.00	7.00	10.00	FKM	WPS-4029
W14090L504	90.00	100.00	7.00	10.00	PU	WPH-2365
W140901107	90.00	100.00	10.00	13.00	NBR	WPS-5390
W140901105	90.00	100.00	10.00	13.00	NBR	WPS-4267
W14090L507	90.00	102.00	7.00	12.00	PU	WPH-2456
W14090L502	90.00	104.00	8.00	11.00	PU	WPH-997
W14090L503	90.00	104.00	8.00	12.00	PU	WPH-1840
W140901108	90.00	104.00	8.00	12.00	NBR	WPS-6811
W140901110	90.00	106.00	8.00	10.00	NBR	WPS-7322
W140901102	**90.00**	**110.00**	**7.00**	**10.00**	**NBR**	**WPS-1344**
W140906702	90.00	110.00	7.00	10.00	FKM	WPS-7505
W140901109	90.00	110.00	11.50	15.00	NBR	WPS-7024
W140951101	**95.00**	**105.00**	**7.00**	**10.00**	**NBR**	**WPS-867**
W140951103	95.00	106.00	7.00	10.00	NBR	WPS-2205
W140951107	95.00	110.00	7.00	10.00	NBR	WPS-7352
W14095L501	95.00	110.00	9.00	13.70	PU	WPH-2345
W140951106	95.00	114.00	10.00	12.00	NBR	WPS-6997
W140951104	95.25	111.13	7.00	10.00	NBR	WPS-5488
W140951105	95.25	114.30	7.00	10.00	NBR	WPS-5489
W14100L501	100.00	110.00	7.00	10.00	PU	WPH-1485
W141001101	**100.00**	**110.00**	**7.00**	**10.00**	**NBR**	**WPS-274**
W141001101	100.00	110.00	7.00	10.00	NBR	WPS-4209
W141001111	100.00	112.20	7.10	12.00	NBR	WPS-7176
W141001105	100.00	112.20	7.20	12.00	NBR	WPS-3369

Part No.	d (f8)	D (H9)	L (+0.2)	H	Matl.	Mould No.
W141001110	100.00	114.00	8.00	10.00	NBR	WPS-5490
W14100L502	100.00	114.80	7.80	12.00	PU	WPH-2023
W141001106	100.00	115.00	7.00	10.00	NBR	WPS-3712
W141001107	100.00	115.00	9.00	12.00	NBR	WPS-4054
W141001104	100.00	120.00	7.00	10.00	NBR	WPS-2435
W141001003	100.00	120.00	10.00	14.00	NBR	WPS-624
W141011102	101.60	114.30	9.53	12.70	NBR	WPS-7190
W141011101	101.60	120.00	7.00	10.00	NBR	WPS-5491
W141051101	**105.00**	**115.00**	**7.00**	**10.00**	**NBR**	**WPS-1347**
W14105L501	105.00	115.00	7.00	10.00	PU	WPH-2384
W141051103	105.00	121.00	9.00	12.00	NBR	WPS-5501
W141051102	105.00	177.00	10.00	15.00	NBR	WPS-5096
W141066701	106.50	118.00	9.00	12.00	FKM	WPS-3941
W141106702	110.00	118.00	7.00	10.00	FKM	WPS-6501
W141101101	**110.00**	**120.00**	**7.00**	**10.00**	**NBR**	**WPS-693**
W141106701	110.00	120.00	7.00	10.00	FKM	WPS-2997
W141101107	110.00	120.00	7.00	10.00	NBR	WPS-4210
W14110L502	110.00	120.00	7.00	10.00	PU	WPH-2364
W141101110	110.00	120.00	8.00	11.00	NBR	WPS-5494
W141101106	110.00	120.00	9.00	12.00	NBR	WPS-2442
W141101111	110.00	120.00	11.00	13.00	NBR	WPS-5796
W141101109	110.00	125.00	8.00	11.00	NBR	WPS-5493
W141101108	110.00	126.00	8.00	11.00	NBR	WPS-5492
W141101105	110.00	126.00	10.00	13.00	NBR	WPS-6144
W141121101	112.00	122.00	6.00	8.00	NBR	WPS-6969
W141221101	112.00	128.00	9.00	12.00	NBR	WPS-6132
W141151101	115.00	125.00	7.00	10.00	NBR	WPS-1345
W141151103	115.00	125.00	10.50	12.50	NBR	WPS-7301
W141155901	115.00	130.00	9.00	13.00	PU	WPH-2720
W14115L501	115.00	131.00	9.00	12.00	PU	WPH-1880
W141151102	115.00	132.00	7.00	10.00	NBR	WPS-5413
W14118L501	118.00	132.00	8.20	11.20	PU	WPH-2430
W141191101	119.00	130.00	7.00	10.00	NBR	WPS-6723
W14120L501	120.00	130.00	5.00	8.00	PU	WPH-2024
W141201101	**120.00**	**130.00**	**7.00**	**10.00**	**NBR**	**WPS-975**
W141201101	120.00	130.00	7.00	10.00	NBR	WPS-5003
W141206701	120.00	130.00	7.00	10.00	FKM	WPS-2869
W14120L502	120.00	130.00	7.00	10.00	PU	WPH-2212
W141201105	120.00	130.00	8.00	11.00	NBR	WPS-5495
W14120L503	120.00	135.00	7.00	10.00	PU	WPH-2744
W141203501	120.00	135.00	9.00	12.00	EPDM	WPS-4885
W141205901	120.00	135.00	12.00	16.00	PU	WPH-1484
W141201106	120.00	136.00	8.00	11.00	NBR	WPS-5502
W141201107	120.00	136.00	9.00	12.00	NBR	WPS-6967
W141226701	122.00	132.00	7.00	10.00	FKM	WPS-6274
W141251104	125.00	135.00	6.00	9.00	NBR	WPS-7321
W141256702	125.00	135.00	7.00	12.00	FKM	WPS-5565
W141255901	125.00	140.00	9.00	12.00	PU	WPH-637
W141251101	**125.00**	**140.00**	**9.00**	**12.00**	**NBR**	**WPS-1081**
W141251103	125.00	141.00	9.00	12.00	NBR	WPS-5497
W14125L501	125.00	141.00	9.00	15.00	PU	WPH-690
W141305901	130.00	145.00	8.00	12.00	PU	WPH-2719

Bold sizes are readily available in stock.
Other materials are available on request.

W14

Heavy Duty Wiper Seal

MAX SPARE LIMITED
QUALITY. PRECISION. SPEED.

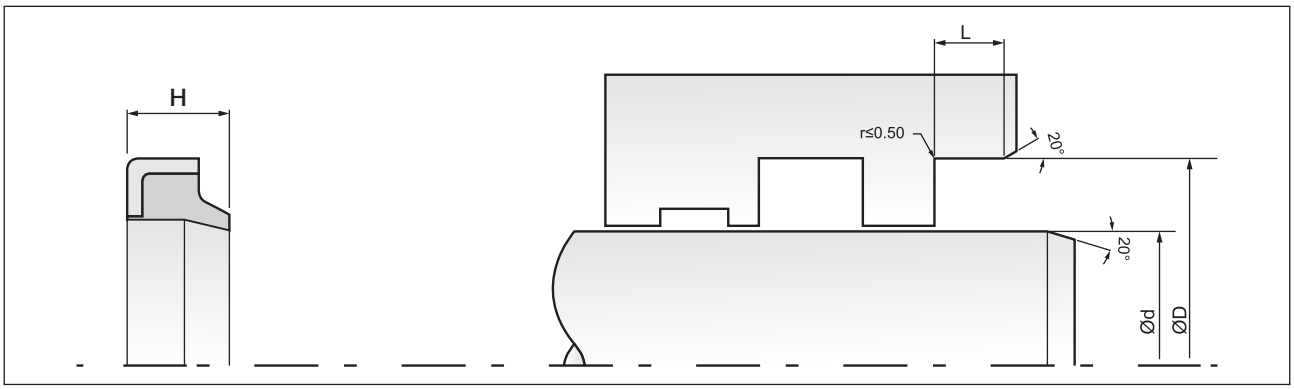

Part No.	d (f8)	D (H9)	L (+0.2)	H	Matl.	Mould No.
W141301101	**130.00**	**145.00**	**9.00**	**12.00**	**NBR**	**WPS-565**
W14130L502	130.00	145.00	9.00	12.00	PU	WPH-2781
W141301101	130.00	145.00	9.00	12.00	NBR	WPS-5005
W141306602	130.00	145.00	10.00	12.00	FKM	WPS-5790
W141301103	130.00	146.00	8.00	11.00	NBR	WPS-5496
W14130L501	130.00	146.00	9.00	12.00	PU	WPH-1841
W141301104	130.00	160.00	10.00	14.00	NBR	WPS-6968
W141301102	130.00	160.00	12.00	15.00	NBR	WPS-3715
W141351101	135.00	145.00	7.00	10.00	NBR	WPS-667
W141351102	135.00	150.00	9.00	12.00	NBR	WPS-868
W141361101	136.40	168.30	10.00	15.00	NBR	WPS-5654
W141406701	140.00	155.00	9.00	12.00	FKM	WPS-4719
W141401101	**140.00**	**155.00**	**9.00**	**12.00**	**NBR**	**WPS-1080**
W14140L501	140.00	155.00	9.00	12.00	PU	WPH-1613
W141401104	140.00	160.00	7.00	10.00	NBR	WPS-7038
W141401102	140.00	160.00	9.00	12.00	NBR	WPS-2552
W141401103	140.00	160.00	10.00	12.00	NBR	WPS-5498
W141401105	140.00	160.00	15.00	20.00	NBR	WPS-7204
W141451102	145.00	160.00	9.00	12.00	NBR	WPS-187
W14145L501	145.00	165.00	10.00	14.00	PU	WPH-1647
W141506701	150.00	165.00	9.00	12.00	FKM	WPS-963
W141501105	150.00	170.00	9.00	12.00	NBR	WPS-6705
W141501106	150.00	170.00	11.00	15.00	NBR	WPS-6976
W141551106	155.00	165.00	7.00	10.00	NBR	WPS-6727
W141551105	155.00	175.00	9.00	12.00	NBR	WPS-6706
W141551102	155.00	177.00	10.00	15.00	NBR	WPS-5109
W141581101	158.50	180.00	7.00	10.00	NBR	WPS-5068
W141601104	160.00	168.00	9.00	12.00	NBR	WPS-5199
W141601103	160.00	170.00	9.00	12.00	NBR	WPS-5200
W141605901	160.00	175.00	9.00	12.00	PU	WPH-1987
W141601101	**160.00**	**175.00**	**9.00**	**12.00**	**NBR**	**WPS-1086**
W141601105	160.00	175.00	10.00	16.00	NBR	WPS-7037
W141601102	160.00	175.00	12.00	16.00	NBR	WPS-819
W141601106	160.00	176.00	8.00	12.00	NBR	WPS-7087
W141606702	160.00	190.00	10.00	14.00	FKM	WPS-4930
W141651102	165.00	176.15	7.00	12.00	NBR	WPS-6201
W141651101	165.00	180.00	12.00	16.00	NBR	WPS-4044
W141701102	**170.00**	**185.00**	**10.00**	**14.00**	**NBR**	**WPS-1079**
W141701104	170.00	215.00	12.00	16.00	NBR	WPS-4350
W141771101	177.80	209.55	15.87	19.05	NBR	WPS-2221
W141781002	**178.61**	**193.50**	**8.00**	**11.00**	**NBR**	**WPS-950**

Part No.	d (f8)	D (H9)	L (+0.2)	H	Matl.	Mould No.
W141801102	180.00	195.00	9.00	12.00	NBR	WPS-3706
W141801101	**180.00**	**195.00**	**10.00**	**14.00**	**NBR**	**WPS-1078**
W141806701	180.00	200.00	10.00	18.00	FKM	WPS-3785
W141826701	182.50	197.00	10.00	14.00	FKM	WPS-4016
W141856701	185.00	200.00	7.50	10.00	FKM	WPS-4378
W141851103	185.00	200.00	12.00	18.00	NBR	WPS-5752
W141851104	185.00	205.00	10.00	14.00	NBR	WPS-7441
W14185L501	185.00	210.00	10.00	14.00	PU	WPH-2454
W141871101	187.00	200.00	9.00	12.00	NBR	WPS-6018
W141901001	190.00	202.00	9.00	12.00	NBR	WPS-2285
W142001103	200.00	220.00	11.00	15.00	NBR	WPS-4570
W142001102	**200.00**	**220.00**	**12.00**	**16.00**	**NBR**	**WPS-816**
W14200L501	200.00	220.00	12.00	16.00	PU	WPH-2144
W142051101	205.00	215.00	7.00	10.00	NBR	WPS-5791
W142101101	210.00	230.00	12.00	16.00	NBR	WPS-4796
W142101102	210.00	235.00	12.00	18.00	NBR	WPS-7510
W142156701	215.00	235.00	10.00	18.00	FKM	WPS-6857
W142151101	215.00	235.00	12.00	16.00	NBR	WPS-2115
W142206701	220.00	235.00	10.00	14.00	FKM	WPS-4929
W142206702	220.00	240.00	9.00	12.00	FKM	WPS-6130
W142201103	220.00	240.00	12.00	16.00	NBR	WPS-4347
W142251101	225.00	250.00	12.00	16.00	NBR	WPS-4492
W142301102	230.00	250.00	12.00	17.00	NBR	WPS-4591
W142401101	**240.00**	**260.00**	**12.00**	**16.00**	**NBR**	**WPS-1962**
W142501101	250.00	270.00	9.00	12.00	NBR	WPS-4151
W142601101	260.00	290.00	12.00	16.00	NBR	WPS-3994
W14265L501	265.00	290.00	12.00	17.00	PU	WPH-1849
W142701101	270.00	295.00	12.00	16.00	NBR	WPS-3265
W14280L501	280.00	300.00	12.00	16.00	PU	WPH-1780
W14290L501	290.00	310.00	10.00	14.00	PU	WPH-2562
W143001102	300.00	320.00	10.00	12.00	NBR	WPS-2268
W143201101	320.00	340.00	12.00	16.00	NBR	WPS-4070
W143406701	340.00	370.00	16.00	22.00	FKM	WPS-5283
W143501101	350.00	380.00	12.00	16.00	NBR	WPS-3032
W143551101	355.00	365.00	7.00	10.00	NBR	WPS-6966
W143906701	390.00	420.00	15.00	18.00	FKM	WPS-2580
W144106601	410.00	440.00	12.00	15.00	FKM	WPS-2530
W144106701	410.00	440.00	15.00	18.00	FKM	WPS-6374
W146501101	650.00	714.00	25.00	35.00	NBR	WPS-2710
W147291101	729.00	760.00	13.50	18.00	NBR	WPS-2167

Bold sizes are readily available in stock.
Other materials are available on request.

W15

Heavy Duty Wiper Seal

DETAILS

W15 is a single acting metal-cased wiper seal, designed to press fit into open groove housings for light and medium-duty applications. The precision moulded Nitrile rubber (NBR) wiping element is bonded to a metal case treated to prevent rust. The proportions of the NBR wiping lip follow the side movement of the rod to clear away the deposited dirt. W15 also available in Polyurethane material. Due to excellent wear resistance of polyurethane the life expected is 3 times than that of NBR.

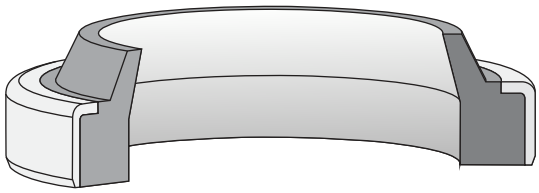

COMPATIBILITY

Mineral oils, bio oils, water soluble & water glycol fluids.

MATERIAL

Nitrile Rubber 85/90 Shore A
Mild Steel (SS-304/316 on request)

APPLICATION

- Light to Medium duty cylinders.
- Hydraulic and Pneumatic cylinders.

OPERATING CONDITIONS

Temperature Range : -30°C to + 100°C
Speed : 0.5 m/s

FEATURES

- General purpose seal.
- Good wiping performance.
- Heavy duty application.
- Long service life.
- Seal retainer not required.
- Press fitting into the groove.

SURFACE ROUGHNESS

Static : 0.8 μmRa
Dynamic : 0.4 μmRa

INSTALLATION & ASSEMBLY

W15 seals are press fit into axially open grooves. The fitting tool must have no sharp edges. The seal must lubricate before installation.

W15

Heavy Duty Wiper Seal

MAX SPARE LIMITED
QUALITY. PRECISION. SPEED.

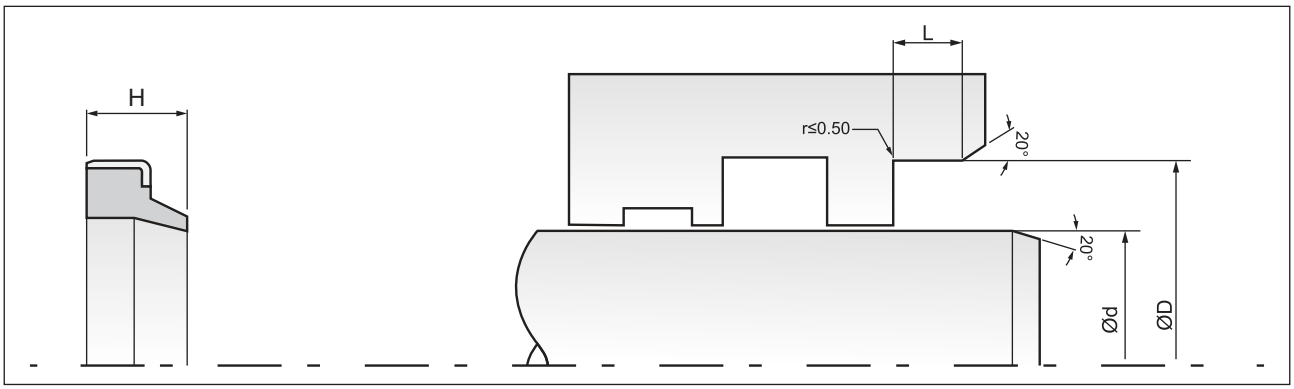

Part No.	d (f8)	D (H9)	L (+0.2)	H	Matl.	Mould No.
W150086701	8.00	14.00	3.00	4.50	FKM	WPS-6773
W150081101	8.00	18.00	5.00	8.00	NBR	WPS-7047
W15010L502	10.00	20.00	5.00	7.00	PU	WPH-1478
W150101101	10.00	20.00	5.00	7.00	NBR	WPS-6236
W15010L501	10.00	20.00	5.00	8.00	PU	WPH-1266
W150111101	11.11	15.87	3.17	4.76	NBR	WPS-5968
W150121102	12.00	18.00	3.00	4.70	NBR	WPS-7028
W15012L501	12.00	20.00	4.00	6.00	PU	WPH-619
W150121101	12.70	19.05	2.38	3.17	NBR	WPS-6914
W150145901	14.00	24.00	5.00	7.00	PU	WPH-2537
W15014L501	14.00	25.00	5.00	8.00	PU	WPH-1686
W150151101	15.00	21.00	4.00	5.40	NBR	WPS-2266
W150161102	16.00	20.35	3.00	4.00	NBR	WPS-6506
W150165904	16.00	22.00	3.00	11.00	PU	WPH-1094
W150165903	16.00	22.00	3.50	5.00	PU	WPH-225
W15016L501	16.00	22.00	4.00	6.00	PU	WPH-800
W15016U301	16.00	25.00	5.00	7.00	FKM	WPS-5753
W150161101	16.00	26.00	4.50	7.00	NBR	WPS-6118
W1501L401	16.00	26.00	5.00	8.00	PU	WPH-724
W150161103	16.00	26.10	5.00	7.50	NBR	WPS-6899
W150165901	16.00	28.00	5.00	7.00	PU	WPH-1142
W150171101	17.00	22.00	3.00	4.20	NBR	WPS-5590
W150185902	18.00	25.00	5.00	8.00	PU	WPH-2230
W150184301	18.90	26.98	3.50	5.50	VMQ	WPS-3143
W150184301	18.90	26.98	3.50	5.50	VMQ	WPS-3378
W150196701	19.00	26.00	5.00	7.00	FKM	WPS-6032
W15020L501	20.00	26.00	4.00	6.00	PU	WPH-2209
W15020L401	20.00	30.00	6.00	8.00	PU	WPH-2608
W150205902	20.00	32.00	5.00	7.00	PU	WPH-1014
W150206701	20.00	32.00	7.00	10.00	FKM	WPS-7394
W150251103	25.00	33.00	3.00	5.00	NBR	WPS-4644
W150251001	25.00	33.00	5.00	7.00	NBR	WPS-4176
W150255905	25.00	35.00	5.00	8.00	PU	WPH-2475
W150256701	25.00	38.00	5.00	7.00	FKM	WPS-2276
W150254301	25.25	33.24	4.00	6.00	VMQ	WPS-3144
W150254301	25.25	33.34	4.00	6.00	VMQ	WPS-3379
W150271101	27.00	35.00	7.00	10.00	NBR	WPS-6600
W150105901	27.00	39.00	6.00	9.00	PU	WPH-2472
W15028L501	28.00	38.00	5.00	8.00	PU	WPH-1388
W15030L401	30.00	40.00	5.00	7.50	PU	WPH-2607
W150301101	30.00	40.00	5.00	8.00	NBR	WPS-4156
W150308701	30.00	40.00	7.00	10.00	PU	WPH-2393
W150301102	30.00	42.00	6.00	9.00	NBR	WPS-4912
W150326703	32.00	40.00	4.00	7.00	FKM	WPS-6793
W150326702	32.00	40.00	5.00	8.00	FKM	WPS-6444
W15032L501	32.00	42.00	7.00	10.00	PU	WPH-1901
W150326701	32.00	45.00	7.00	10.00	FKM	WPS-4494
W150351101	35.00	41.00	5.00	7.00	NBR	WPS-3177
W150355902	35.00	45.00	5.00	8.00	PU	WPH-481
W150351102	35.00	47.00	7.00	10.00	NBR	WPS-4853
W150361101	36.00	45.00	7.00	10.00	NBR	WPS-4073
W15036L501	36.00	46.00	5.00	7.00	PU	WPH-634

Part No.	d (f8)	D (H9)	L (+0.2)	H	Matl.	Mould No.
W150361004	36.00	48.00	5.00	8.00	NBR	WPS-3758
W150361005	36.00	48.00	6.00	8.00	NBR	WPS-4706
W150381101	38.10	48.20	7.20	10.50	NBR	WPS-3499
W150401106	40.00	46.00	5.00	8.00	NBR	WPS-6960
W150401107	40.00	47.50	5.00	7.00	NBR	WPS-7349
W150406702	40.00	48.00	5.00	6.50	FKM	WPS-6498
W150401104	40.00	48.00	5.00	7.00	NBR	WPS-5403
W15040L504	40.00	48.00	6.00	9.00	PU	WPH-2086
W15040L503	40.00	50.00	5.00	8.00	PU	WPH-1740
W150406701	40.00	50.00	5.00	8.00	FKM	WPS-2197
W150401103	40.00	50.00	7.00	10.00	NBR	WPS-4288
W150405901	40.00	50.00	7.00	10.00	PU	WPH-2476
W150401102	40.00	52.00	5.00	8.00	NBR	WPS-4055
W15040L502	40.00	52.00	7.00	10.00	PU	WPH-1738
W150401105	40.00	53.00	7.00	10.00	NBR	WPS-6024
W15042L501	42.00	52.00	7.00	10.00	PU	WPH-2743
W150421101	42.00	55.00	7.00	8.00	NBR	WPS-2253
W150446701	44.45	55.00	7.00	10.00	FKM	WPS-4550
W150451101	45.00	53.00	5.00	7.00	NBR	WPS-5876
W150451001	45.00	54.00	7.00	10.00	NBR	WPS-4177
W15045L501	45.00	55.00	7.00	10.00	PU	WPH-148
W150456702	45.00	55.00	7.10	10.00	FKM	WPS-5992
W150451103	45.00	57.00	5.00	8.00	NBR	WPS-6714
W150458701	45.00	60.00	7.00	10.00	PU	WPH-539
W150501103	50.00	59.00	3.00	6.00	NBR	WPS-6702
W15050L501	50.00	60.00	5.00	7.00	PU	WPH-1385
W150501102	50.00	60.00	5.00	8.00	NBR	WPS-3991
W15050L502	50.00	60.00	7.00	10.00	PU	WPH-157
W15050L503	50.00	60.00	7.00	11.00	PU	WPH-1092
W150500802	50.00	62.00	5.00	8.00	NBR	WPS-3557
W150505904	50.80	63.50	7.00	10.00	PU	WPH-2742
W150521101	52.00	66.00	7.00	10.00	NBR	WPS-2945
W150546701	54.00	66.00	5.00	7.50	FKM	WPS-6497
W150558701	55.00	65.00	7.00	10.00	PU	WPH-2394
W150551101	55.00	68.00	7.80	10.00	NBR	WPS-6538
W150565901	56.00	65.00	6.80	10.00	PU	WPH-1409
W15056L501	56.00	70.00	8.00	11.00	PU	WPH-1649
W150576701	57.15	76.20	9.00	12.00	FKM	WPS-7227
W150601101	60.00	68.00	5.00	7.00	NBR	WPS-5574
W15060L503	60.00	74.00	8.00	11.00	PU	WPH-1909
W150606701	60.00	74.50	8.50	11.00	FKM	WPS-4227
W150606702	60.00	80.00	7.00	10.00	FKM	WPS-6930
W15062L501	62.50	73.60	5.00	7.00	PU	WPH-827
W150636704	63.00	73.00	9.00	12.00	FKM	WPS-6120
W150636703	63.00	73.50	5.00	8.00	FKM	WPS-5614
W150636705	63.00	74.00	6.50	10.00	FKM	WPS-7371
W150631101	63.00	75.00	7.00	10.00	NBR	WPS-3388
W150635901	63.00	78.00	7.00	10.00	PU	WPH-2316
W150635902	63.50	76.20	7.00	10.00	PU	WPH-2741
W150655901	65.00	75.00	7.00	10.00	PU	WPH-1054
W150655901	65.00	75.00	7.00	10.00	PU	WPH-1316
W150651102	65.00	75.00	7.00	10.00	NBR	WPS-4262

Bold sizes are readily available in stock.
Other materials are available on request.

MAX SPARE LIMITED
QUALITY. PRECISION. SPEED.

W15

Heavy Duty Wiper Seal

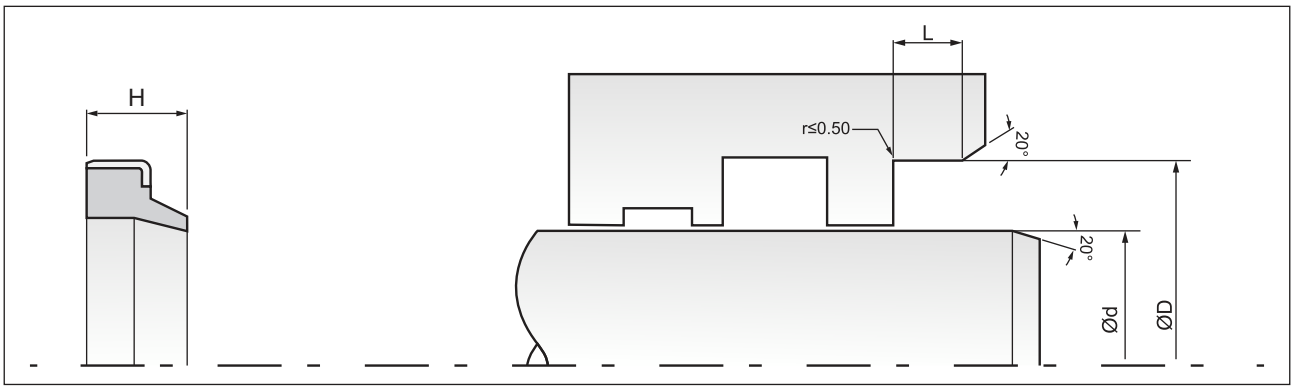

Part No.	d (f8)	D (H9)	L (+0.2)	H	Matl.	Mould No.
W15065L502	65.00	79.00	8.00	11.00	PU	WPH-2347
W150651103	65.00	80.00	7.00	9.50	NBR	WPS-6573
W150651101	65.00	80.00	7.00	10.00	NBR	WPS-4232
W150706701	70.00	80.00	7.00	10.00	FKM	WPS-2824
W150706702	70.00	80.00	8.00	10.50	FKM	WPS-6473
W150701101	70.00	82.00	5.00	8.00	NBR	WPS-2211
W150701001	70.00	82.00	8.00	10.00	NBR	WPS-4707
W15070L501	70.00	84.00	8.00	11.00	PU	WPH-2278
W150751001	75.00	85.00	7.00	10.00	NBR	WPS-5595
W150751101	75.00	85.00	9.00	12.00	NBR	WPS-5721
W15075L501	75.00	89.00	8.00	11.00	PU	WPH-2586
W150801104	80.00	90.00	6.00	9.00	NBR	WPS-6611
W150806701	80.00	90.00	7.00	10.00	FKM	WPS-3739
W150801101	80.00	92.00	5.20	8.00	NBR	WPS-4761
W150801103	80.00	92.00	7.00	9.00	NBR	WPS-5877
W150801101	80.00	92.00	7.00	10.50	NBR	WPS-7084
W15080L502	80.00	95.00	8.00	11.00	PU	WPH-1175
W150821101	82.00	110.00	7.00	10.00	NBR	WPS-6603
W150901101	90.00	100.00	7.00	10.00	NBR	WPS-5289
W150908701	90.00	100.00	7.00	10.00	PU	WPH-2392
W150901102	90.00	102.00	5.00	8.00	NBR	WPS-7068
W15090L503	90.00	110.00	9.00	12.00	PU	WPH-1174
W150955902	95.00	107.00	9.00	13.00	PU	WPH-631
W150986701	98.00	110.00	7.00	10.00	FKM	WPS-6372
W15100L501	100.00	110.00	7.00	10.00	PU	WPH-159
W15100L501	100.00	110.00	7.00	10.00	PU	WPH-1513
W15100L503	100.00	114.00	8.00	11.00	PU	WPH-2279
W151006701	100.00	114.00	8.00	11.00	FKM	WPS-6451
W15100L502	100.00	115.00	8.00	11.00	PU	WPH-2168
W151001101	100.00	115.00	9.00	11.00	NBR	WPS-6427
W151051102	105.00	115.00	7.00	10.00	NBR	WPS-4351
W15105L501	105.00	121.00	9.00	12.00	PU	WPH-1910
W151101102	110.00	124.00	8.00	11.00	NBR	WPS-3408

Part No.	d (f8)	D (H9)	L (+0.2)	H	Matl.	Mould No.
W151106701	110.00	124.00	8.00	11.00	FKM	WPS-6265
W151146701	114.30	130.17	8.00	11.00	FKM	WPS-7217
W151156701	115.00	125.00	7.00	10.00	FKM	WPS-4493
W151151102	115.00	125.00	7.00	11.00	NBR	WPS-5606
W151181101	118.00	134.00	9.00	12.00	NBR	WPS-7196
W151205903	120.00	130.00	7.00	10.00	PU	WPH-2031
W151206701	120.00	130.00	7.00	10.00	FKM	WPS-6768
W151205904	120.00	132.00	7.00	10.30	PU	WPH-1615
W151201102	120.00	136.00	9.00	12.00	NBR	WPS-5344
W151255901	125.00	139.00	8.00	10.00	PU	WPH-1185
W151271101	127.00	158.75	6.35	14.22	NBR	WPS-6445
W151301101	130.00	145.00	9.00	12.00	NBR	WPS-6612
W151358701	135.00	150.00	9.00	12.00	PU	WPH-885
W15140L501	140.00	155.00	9.00	12.00	PU	WPH-2341
W151408701	140.00	160.00	10.00	14.00	PU	WPH-2304
W15160L501	160.00	175.00	9.00	12.00	PU	WPH-2628
W151601102	160.00	180.00	9.00	13.00	NBR	WPS-6244
W151701101	170.00	190.00	10.00	14.00	NBR	WPS-3410
W15180L501	180.00	195.00	10.00	14.00	PU	WPH-2075
W151801101	180.00	195.00	10.00	14.00	NBR	WPS-2286
W15180L502	180.00	205.00	12.00	18.00	PU	WPH-2163
W15180L503	180.00	205.00	14.00	20.00	PU	WPH-2162
W152051102	205.00	220.00	9.50	16.50	NBR	WPS-7142
W152206701	220.00	240.00	12.00	13.00	FKM	WPS-3444
W15230L501	230.00	250.00	10.00	14.00	PU	WPH-2074
W152301101	230.00	250.00	10.00	16.00	NBR	WPS-6540
W152805901	280.00	300.00	12.00	16.00	PU	WPH-287
W153001101	300.00	330.00	17.00	22.00	NBR	WPS-3432
W153101101	310.00	340.00	16.00	22.00	NBR	WPS-6509
W153205901	320.00	350.00	16.00	22.00	PU	WPH-2580
W153501101	350.00	380.00	16.00	24.00	NBR	WPS-6812
W157301001	730.00	790.00	25.00	31.00	NBR	WPS-3247

Bold sizes are readily available in stock.
Other materials are available on request.

W16

Heavy Duty Wiper Seal

DETAILS

W16 is a double acting wiper seal. The internal wiping lip controls the lubrication film on the rod and wipes off the excess fluid from the rod on extending stroke and allows this excess fluid to return under the rod seal on retracting stroke. Thus, the double acting wipers extend the service life and improve the sealing performance of the rod system.

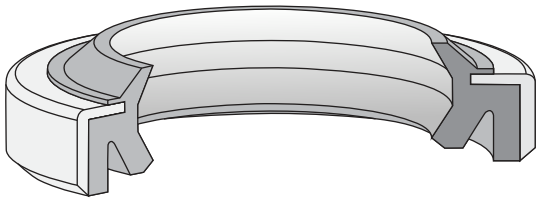

COMPATIBILITY

Mineral oils, bio oils, water soluble & water glycol fluids.

MATERIAL

Polyurethane 92 Shore A
Mild Steel (SS-304/316 on request)

APPLICATION

- Injection moulding machines, presses, fork lift & material handling equipments.
- Medium duty mining, cranes, telescopic cylinders, loading platforms etc.

OPERATING CONDITIONS

Temperature Range : -30°C to + 100°C
Speed : 1.0 m/s

FEATURES

- Good wiping performance.
- Can be subjected to heavy duty.
- Easy press fit installation in open grooves.
- Long service life.
- Sealing lips directed in words gives both side wiping effect.
- Seal retainer not required.

SURFACE ROUGHNESS

Static : 0.8 µmRa
Dynamic : 0.4 µmRa

INSTALLATION & ASSEMBLY

W16 seals are press fit into axially open grooves. The fitting tool must have no sharp edges. The seal must lubricate before installation.

W16

Heavy Duty Wiper Seal

MAX SPARE LIMITED
QUALITY. PRECISION. SPEED.

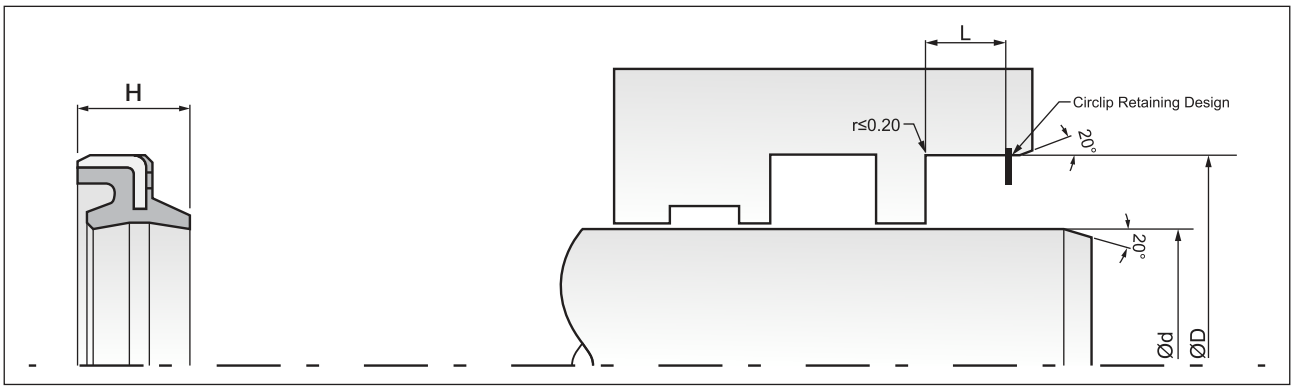

Part No.	d (f8)	D (H9)	L (+0.2)	H	Matl.	Mould No.
W160181104	18.00	30.00	6.00	9.00	NBR	WPS-4716
W160181102	18.00	31.00	6.00	9.00	NBR	WPS-3660
W160181103	18.00	35.00	7.00	10.00	NBR	WPS-4614
W160184501	18.20	27.30	3.50	5.50	VMQ	WPS-5540
W160195902	19.00	26.00	5.00	7.00	PU	WPH-1377
W16019L502	19.00	27.00	4.00	6.00	PU	WPH-216
W16019L501	19.05	26.99	4.00	5.00	PU	WPH-652
W16020L402	20.00	27.00	4.00	6.00	PU	WPH-1005
W16020L401	20.00	27.00	4.00	7.00	PU	WPH-944
WRC0206710	20.00	28.00	4.00	6.00	FKM	WPS-4683
W16020L502	20.00	28.00	6.00	8.00	PU	WPH-1716
W160201101	20.00	32.00	6.00	9.00	NBR	WPS-4888
W160221101	22.00	32.00	6.00	9.00	NBR	WPS-3661
W160221102	22.00	34.00	6.00	9.00	NBR	WPS-4685
W160244501	24.50	33.60	4.00	6.00	VMQ	WPS-4778
W160251106	25.00	35.00	4.00	6.00	NBR	WPS-5534
W160251105	25.00	37.00	6.50	9.50	NBR	WPS-5030
W160251102	25.00	37.00	6.00	9.00	NBR	WPS-3886
W160255903	25.00	37.00	6.00	9.00	PU	WPH-695
W160254301	25.25	33.60	4.00	6.00	VMQ	WPS-2146
W160251101	25.35	32.00	4.00	6.00	NBR	WPS-3761
W16025L403	25.35	32.00	5.00	7.00	PU	WPH-1761
W160251104	25.35	35.00	5.00	7.00	NBR	WPS-4606
W160251103	25.35	35.00	6.00	8.00	NBR	WPS-4605
W16025L402	25.40	31.75	5.00	6.50	PU	WPH-1729
W160256601	25.40	31.75	5.00	7.50	FKM	WPS-5511
W16025L401	25.40	34.85	4.70	8.00	PU	WPH-941
W16028L501	28.00	40.00	3.00	6.00	PU	WPH-1128
W16028L501	28.00	40.00	6.00	8.00	PU	WPH-863
W160286601	28.00	40.00	7.00	10.00	FKM	WPS-3418
W16028L401	28.57	38.10	4.74	6.35	PU	WPH-1682
W16030L501	30.00	40.00	3.00	6.00	PU	WPH-1111
W16030L503	30.00	40.00	7.00	10.00	PU	WPH-1866
W16030L502	**30.00**	**42.00**	**6.00**	**9.00**	**PU**	**WPH-1673**
W160301101	30.00	47.00	7.00	10.00	NBR	WPS-3887
W160321101	32.00	40.00	4.00	7.00	NBR	WPS-3003
W160321104	32.00	44.00	7.80	10.50	NBR	WPS-5594
W160321102	32.00	44.00	7.00	10.00	NBR	WPS-3889
W160321103	32.00	45.00	7.00	10.00	NBR	WPS-5566
W16032L501	32.00	50.00	5.50	7.50	PU	WPH-1403
W16032L502	32.00	52.00	8.00	11.00	PU	WPH-1767
W16035L501	35.00	46.70	5.00	9.50	PU	WPH-783
W160351101	35.00	47.00	7.00	10.00	NBR	WPS-2467
W160351102	35.00	48.00	7.00	12.00	NBR	WPS-2470
W16040L503	40.00	50.00	5.00	7.00	PU	WPH-1146
W1604067013	40.00	50.00	7.00	10.00	FKM	WPS-5293
W160401101	40.00	51.00	8.00	11.00	NBR	WPS-3890
W160401103	40.00	52.00	5.00	8.00	NBR	WPS-4703
W160401102	40.00	52.00	7.00	10.00	NBR	WPS-3891
W16040L504	**40.00**	**52.00**	**7.00**	**10.00**	**PU**	**WPH-137**
W16040R301	40.00	62.00	8.00	12.00	PU	WPH-1770
W160451106	45.00	53.00	5.00	8.00	NBR	WPS-4791

Part No.	d (f8)	D (H9)	L (+0.2)	H	Matl.	Mould No.
W16045L502	45.00	55.00	5.00	7.00	PU	WPH-798
W160451107	45.00	55.00	7.00	10.00	NBR	WPS-5022
W160451103	45.00	56.00	8.00	11.00	NBR	WPS-3893
W16045L504	**45.00**	**57.00**	**7.00**	**10.00**	**PU**	**WPH-1674**
W160451104	45.00	57.00	7.00	10.00	NBR	WPS-3916
W160451101	45.00	57.00	7.00	10.50	NBR	WPS-1424
W160451102	45.00	68.00	8.00	12.00	NBR	WPS-3095
W16047L501	47.62	79.37	23.11	23.11	PU	WPH-1488
W160501105	50.00	60.00	6.50	10.00	NBR	WPS-5558
W16050L503	50.00	60.00	7.00	10.00	PU	WPH-1630
W160506702	50.00	60.00	7.00	10.00	FKM	WPS-4408
W160501102	50.00	60.00	7.00	10.00	NBR	WPS-898
W160504601	50.00	62.00	7.00	10.00	VMQ	WPS-5054
W16050L505	**50.00**	**62.00**	**7.00**	**10.00**	**PU**	**WPH-1668**
W160501103	50.00	62.00	7.00	10.00	NBR	WPS-3352
W16050L502	50.00	62.00	8.00	11.00	PU	WPH-1529
W160501104	50.00	62.00	8.00	11.00	NBR	WPS-3915
W160501101	50.00	72.00	8.00	12.00	NBR	WPS-3093
W160551103	55.00	65.00	7.00	10.00	NBR	WPS-3698
W160551102	55.00	69.00	8.00	11.00	NBR	WPS-3349
W160551101	55.00	78.00	8.00	12.00	NBR	WPS-3096
W160566603	56.00	66.00	7.00	10.00	FKM	WPS-4542
W160566601	56.00	70.00	7.00	11.50	FKM	WPS-3420
W160566602	56.00	70.00	8.00	11.00	FKM	WPS-3493
W16060L503	60.00	73.00	7.00	10.00	PU	WPH-892
W160601104	60.00	73.00	8.00	11.00	NBR	WPS-3898
W160606701	60.00	73.50	7.00	10.00	FKM	WPS-4152
W160601103	60.00	74.00	8.00	11.00	NBR	WPS-3351
W16060L504	**60.00**	**74.00**	**8.00**	**11.00**	**PU**	**WPH-131**
W160601102	60.00	82.00	8.00	12.00	NBR	WPS-3094
W16063L502	63.00	75.00	7.00	10.00	PU	WPH-1629
W160631102	63.00	77.00	8.00	10.00	NBR	WPS-4942
W160651102	65.00	79.00	8.00	11.00	NBR	WPS-3348
W16065L501	65.00	79.00	8.00	11.50	PU	WPH-122
W160651101	65.00	88.00	8.00	12.00	NBR	WPS-3097
W160701101	70.00	80.00	7.00	10.00	NBR	WPS-3897
W160708701	70.00	80.00	7.00	9.50	PU	WPH-1077
W16070L503	70.00	82.00	7.00	10.00	PU	WPH-937
W16070L501	70.00	84.00	8.00	11.50	PU	WPH-123
W160701104	70.00	84.00	7.00	10.00	NBR	WPS-4789
W160701105	70.00	84.00	8.20	11.00	NBR	WPS-4950
W160701102	70.00	84.00	8.00	11.00	NBR	WPS-3894
W160701103	70.00	86.00	6.00	8.00	NBR	WPS-3895
W160716601	71.00	85.00	8.00	11.50	FKM	WPS-4110
W160751101	75.00	85.00	7.00	10.00	NBR	WPS-3892
W16075L502	75.00	87.00	8.00	11.00	PU	WPH-938
W16075L501	75.00	89.00	8.00	11.50	PU	WPH-126
W160751102	75.00	89.00	8.00	11.00	NBR	WPS-3896
W16076R301	76.20	101.60	14.00	14.00	PU	WPH-1809
W160781101	78.00	92.00	8.00	11.00	NBR	WPS-3614
W160801101	80.00	90.00	7.00	10.00	NBR	WPS-3899
W160808701	80.00	90.00	7.00	9.50	PU	WPH-1078

Bold sizes are readily available in stock.
Other materials are available on request.

W16

Heavy Duty Wiper Seal

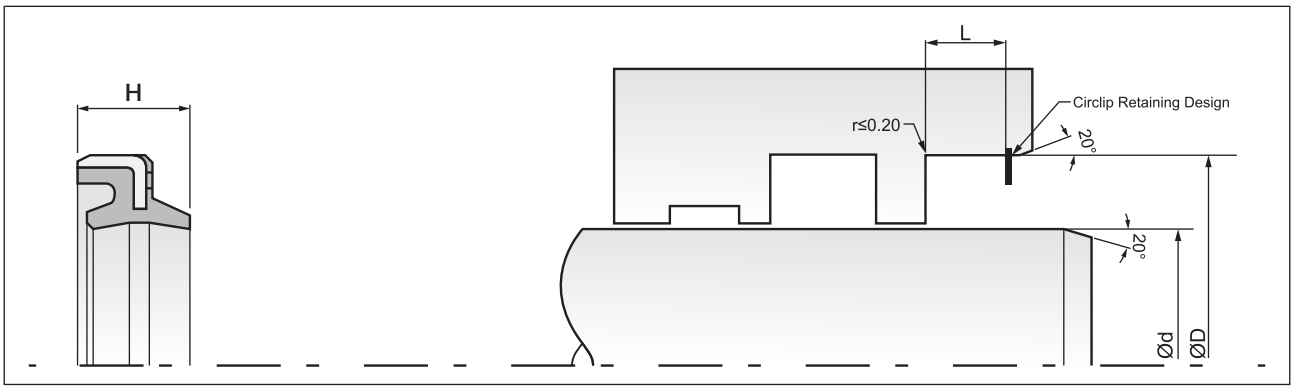

Part No.	d (f8)	D (H9)	L (+0.2)	H	Matl.	Mould No.
W160801103	80.00	94.00	8.00	11.00	NBR	WPS-3900
W16080L501	80.00	94.00	8.00	11.50	PU	WPH-130
W16080R302	80.00	94.00	8.00	12.00	PU	WPH-1263
W160801104	80.00	95.00	8.00	11.00	NBR	WPS-3901
W160801105	80.00	100.00	9.00	12.00	NBR	WPS-3904
W160806701	80.00	112.00	13.00	18.00	FKM	WPS-3528
W16082R301	82.55	107.95	14.00	14.00	PU	WPH-1398
W16082L501	82.55	127.00	23.01	23.01	PU	WPH-1502
W160841101	84.95	105.44	14.00	18.00	NBR	WPS-5610
W160851102	85.00	95.00	7.00	10.00	NBR	WPS-3903
W16085L503	85.00	97.00	7.00	10.00	PU	WPH-1755
W16085L502	85.00	99.00	8.00	11.00	PU	WPH-1631
W160851101	85.00	99.00	8.00	11.00	NBR	WPS-3902
W16085L501	85.00	99.00	8.00	12.00	PU	WPH-173
W160851103	85.00	99.00	8.00	12.00	NBR	WPS-3922
W160888701	88.90	114.30	12.70	12.70	PU	WPH-1504
W160901102	90.00	100.00	7.00	10.00	NBR	WPS-3905
W160908701	90.00	100.00	7.00	9.50	PU	WPH-1079
W160901106	90.00	102.00	8.50	11.50	NBR	WPS-4851
W16090L501	90.00	104.00	8.00	11.00	PU	WPH-404
W160906601	90.00	104.00	8.00	11.00	NBR	WPS-3906
W160901104	90.00	105.00	8.00	11.00	NBR	WPS-3907
W16090L502	90.00	105.00	9.00	12.00	PU	WPH-1003
W160901105	90.00	110.00	9.00	12.00	NBR	WPS-3908
W16095L502	95.00	107.00	8.00	11.00	PU	WPH-939
W16095L503	95.00	109.00	8.00	11.00	PU	WPH-1798
W160951101	95.00	109.00	8.00	11.00	NBR	WPS-3909
W160981101	98.00	112.00	8.00	11.00	NBR	WPS-3615
W161001102	100.00	110.00	7.00	10.00	NBR	WPS-3911
W161001101	100.00	114.00	8.00	11.00	NBR	WPS-3910
W161008702	100.00	114.00	8.00	11.00	PU	WPH-1456

Part No.	d (f8)	D (H9)	L (+0.2)	H	Matl.	Mould No.
W161101102	110.00	126.00	8.00	11.00	NBR	WPS-3913
W16110L501	110.00	126.00	9.00	12.50	PU	WPH-450
W161101101	110.00	130.00	8.00	11.00	NBR	WPS-3912
W161121101	112.00	128.00	9.00	12.00	NBR	WPS-5124
W161151101	115.00	127.00	7.00	10.00	NBR	WPS-2468
W16115L501	115.00	127.00	8.00	11.00	PU	WPH-940
W16115L502	115.00	127.00	9.00	13.00	PU	WPH-951
W16115L503	115.00	131.00	9.00	12.00	PU	WPH-1512
W16115R301	115.00	131.00	9.00	12.00	PU	WPH-1170
W161201102	120.00	136.00	9.00	11.00	NBR	WPS-5071
W161201101	120.00	136.00	9.00	12.00	NBR	WPS-3914
W16120L501	120.00	136.00	9.00	15.00	PU	WPH-693
W16123L501	123.82	152.40	23.01	23.01	PU	WPH-1368
W161251101	125.00	137.00	5.50	11.00	NBR	WPS-2236
W161305901	130.00	146.00	9.00	12.00	PU	WPH-480
W161301101	130.00	160.00	10.00	14.00	NBR	WPS-3999
W16140L502	140.00	160.00	10.00	15.00	PU	WPH-1692
W16140L501	140.00	165.00	14.00	20.00	PU	WPH-640
W16150L501	150.00	170.00	10.00	14.00	PU	WPH-1691
W161601102	160.00	175.00	9.00	12.00	NBR	WPS-4479
W161601103	160.00	180.00	9.00	11.00	NBR	WPS-4654
W16170R301	170.00	190.00	10.00	15.00	PU	WPH-1160
W161701101	170.00	190.00	10.00	16.00	NBR	WPS-3098
W161706701	170.00	215.00	12.00	16.00	FKM	WPS-5370
W161801101	180.00	205.00	12.00	18.00	NBR	WPS-3099
W162001101	200.00	225.00	12.00	18.00	NBR	WPS-3100
W16203L501	203.20	228.60	14.09	14.09	PU	WPH-979
W162101101	210.00	230.00	12.00	18.00	NBR	WPS-3101
W162101102	210.00	235.00	12.00	18.00	NBR	WPS-3102
W16270L401	270.00	290.00	12.00	17.00	PU	WPH-1833
W16340R301	340.00	370.00	16.00	21.50	PU	WPH-1752

Bold sizes are readily available in stock.
Other materials are available on request.

W29

Heavy Duty Wiper Seal

DETAILS

W29 is a single acting metal-cased wiper seals designed to press fit into open groove housings for wide range of applications. The polyurethane wiping element is bonded to a metal case treated to prevent rust. The proportions of the polyurethane wiping lip follow the side movement of the rod to clear.

COMPATIBILITY

Mineral oils, bio oils, water soluble & water glycol fluids.

MATERIAL

Polyurethane 92 Shore A
Mild Steel (SS-304/316 on request)

APPLICATION

- Medium duty cylinders.
- Hydraulic & Pneumatic cylinders.

OPERATING CONDITIONS

Temperature Range : -30°C to + 100°C
Speed : 1.0 m/s

FEATURES

- Good wiping performance.
- Good purpose seal.
- Can be subjected to heavy duty.
- Easy press fit installation in open grooves.
- Long service life.
- Seal retainer not required.

SURFACE ROUGHNESS

Static : 1.6 µmRa
Dynamic : 0.4 µmRa

INSTALLATION & ASSEMBLY

W29 seals are press fit into axially open grooves. The fitting tool must have no sharp edges. The seal must lubricate before installation.

W29

Heavy Duty Wiper Seal

MAX SPARE LIMITED
QUALITY. PRECISION. SPEED.

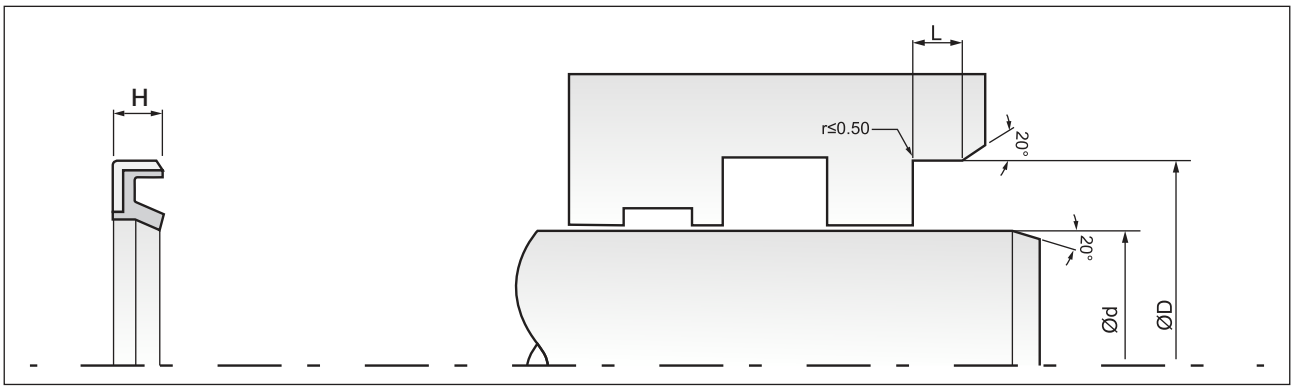

Part No.	d (f8)	D (H9)	L (+0.2)	H	Matl.	Mould No.
W290061101	6.35	11.11	3.67	3.17	NBR	WPS-4872
W29006L501	6.35	12.70	3.67	3.17	PU	WPH-2047
W290080801	8.00	15.00	3.50	3.00	NBR	WPS-4725
W290085901	8.00	16.00	4.50	4.00	PU	WPH-1379
W290091101	9.52	15.87	3.67	3.17	NBR	WPS-5314
W290120801	12.00	21.50	6.30	5.80	NBR	WPS-4845
W290120901	12.50	22.00	6.50	6.00	NBR	WPS-4417
W290120901	12.50	22.00	6.50	6.00	NBR	WPS-3676
W290126701	12.70	19.05	5.37	4.87	FKM	WPS-4554
W290141101	14.28	20.63	3.67	3.17	NBR	WPS-5894
W290151101	15.00	21.00	3.00	2.50	NBR	WPS-7133
W290151002	15.00	21.00	4.00	3.50	NBR	WPS-2244
W290151004	15.87	22.22	3.67	3.17	NBR	WPS-3437
W29015S401	15.87	22.22	3.67	3.17	HNBR	WPS-5431
W290161002	16.00	27.50	6.50	6.00	NBR	WPS-4844
W290160901	16.50	28.00	6.50	6.00	NBR	WPS-4418
W290160901	16.50	28.00	6.50	6.00	NBR	WPS-3675
W290181101	18.00	26.00	4.50	4.00	NBR	WPS-7132
W290191101	19.00	26.00	4.00	3.50	NBR	WPS-5081
W290191001	19.05	25.40	3.80	3.30	NBR	WPS-7392
W290191103	19.05	31.75	6.85	6.35	NBR	WPS-7416
W290196701	19.05	31.75	8.45	7.95	FKM	WPS-4497
W290191102	19.05	31.75	8.50	8.00	NBR	WPS-5838
W29020L501	20.00	28.00	5.50	5.00	PU	WPH-614
W290200801	20.00	31.70	6.50	6.00	NBR	WPS-4843
W290201102	20.00	32.00	6.30	5.80	NBR	WPS-5032
W290201101	20.00	32.00	6.50	6.00	NBR	WPS-4290
W290201105	20.00	40.00	7.50	7.00	NBR	WPS-7465
W290200901	20.50	32.00	6.50	6.00	NBR	WPS-4419
W290200901	20.50	32.00	6.50	6.00	NBR	WPS-3674
W290201103	20.53	26.70	3.72	3.22	NBR	WPS-5045
W29022L501	22.00	28.00	5.50	5.00	PU	WPH-632
W290221102	22.00	32.00	5.50	5.00	NBR	WPS-5526
W290221101	22.00	42.00	11.50	11.00	NBR	WPS-5074
W290221103	22.22	28.57	3.67	3.17	NBR	WPS-7455
W29024L501	24.00	30.00	3.50	3.00	PU	WPH-2729
W290251103	25.00	32.00	3.50	3.00	NBR	WPS-3588
W29025L501	25.00	32.00	5.50	5.00	PU	WPH-2269
W290251104	25.00	33.00	5.20	4.70	NBR	WPS-5530
W290255905	25.00	35.00	5.50	5.00	PU	WPH-1303
W290256702	25.00	35.00	7.50	7.00	FKM	WPS-4923
W290256701	25.00	36.50	7.60	7.10	FKM	WPS-2654
W290251106	25.00	37.00	7.50	7.00	NBR	WPS-6241
W290251107	25.40	31.75	3.67	3.17	NBR	WPS-7215
W29025L502	25.40	31.75	3.80	3.30	PU	WPH-2761
W290251105	25.40	36.49	6.85	6.35	NBR	WPS-6083
W290251102	25.40	38.10	8.75	8.25	NBR	WPS-3546
W290250901	25.50	37.00	8.00	7.50	NBR	WPS-3673
W290250901	25.50	37.00	8.00	7.50	NBR	WPS-4420
W290281102	28.00	35.00	3.00	2.50	NBR	WPS-2946
W290286702	28.00	36.00	5.20	4.70	FKM	WPS-4947
W290281104	28.00	36.00	5.30	4.80	NBR	WPS-3836

Part No.	d (f8)	D (H9)	L (+0.2)	H	Matl.	Mould No.
W290281101	28.00	36.00	5.50	5.00	NBR	WPS-4653
W290281101	28.00	36.00	5.50	5.00	NBR	WPS-2278
W290281103	28.00	38.00	7.50	7.00	NBR	WPS-2950
W29028R301	28.56	37.30	4.70	4.20	PU	WPH-1301
W290281001	28.57	41.27	6.85	6.35	NBR	WPS-7247
W29028L501	28.57	41.27	8.43	7.93	PU	WPH-2760
W290301103	30.00	40.00	5.50	5.00	NBR	WPS-3868
W290301104	30.00	40.00	6.00	5.50	NBR	WPS-3938
W290308701	30.00	40.00	6.50	6.00	PU	WPH-2725
W290305905	30.00	40.00	7.50	7.00	PU	WPH-1495
W290305904	30.00	42.00	7.50	7.00	PU	WPH-1445
W29030L501	30.00	42.00	7.50	7.00	PU	WPH-2005
W29030L501	30.00	42.00	7.50	7.00	PU	WPH-2029
W290305903	30.16	41.27	7.64	7.14	PU	WPH-1293
W290311102	31.40	45.20	5.33	4.83	NBR	WPS-3417
W290311106	31.75	38.10	3.67	3.17	NBR	WPS-7502
W29031L502	31.75	41.27	7.50	7	PU	WPH-2183
W290311101	31.75	42.67	5.26	4.76	NBR	WPS-1618
W290311105	31.75	42.92	5.26	4.76	NBR	WPS-7295
W29031L503	31.75	44.45	6.85	6.35	PU	WPH-2319
W290315904	31.75	44.45	6.85	6.35	PU	WPH-1097
W29031L501	31.75	44.45	8.30	7.80	PU	WPH-1835
W29031L504	31.75	44.45	8.43	7.93	PU	WPH-2770
W29315902	31.75	52.37	10.02	9.52	PU	WPH-510
W290320801	32.00	42.00	4.50	4.00	NBR	WPS-4561
W2903230901	32.00	45.00	8.00	7.50	NBR	WPS-4421
W290320901	32.00	45.00	8.00	7.50	NBR	WPS-3677
W290335901	33.33	47.62	7.64	7.14	PU	WPH-1294
W290341002	34.50	42.00	4.50	4.00	NBR	WPS-3515
W29034L503	34.90	47.62	8.43	7.93	PU	WPH-2759
W29034L502	34.92	44.45	8.43	7.93	PU	WPH-2466
W290341101	34.92	47.62	6.85	6.35	NBR	WPS-7495
W29034L501	34.92	47.62	8.50	8.00	PU	WPH-740
W290351105	35.00	42.00	4.10	3.60	NBR	WPS-5568
W290351102	35.00	45.00	6.10	5.60	NBR	WPS-3663
W290351104	35.00	45.00	8.50	8.00	NBR	WPS-5268
W290351101	35.00	45.20	6.50	6.00	NBR	WPS-3453
W29035L502	35.00	46.00	7.50	7.00	PU	WPH-2840
W29035L501	35.00	47.00	7.50	7.00	PU	WPH-2116
W29036L501	36.00	46.00	7.50	7.00	PU	WPH-1580
W290376401	37.00	52.00	4.50	4.00	FKM	WPS-4295
W29038L504	38.00	48.00	4.50	4.00	PU	WPH-2480
W290388702	38.00	50.00	7.50	7.00	PU	WPH-838
W29038L503	38.10	47.62	3.67	3.17	PU	WPH-2395
W290381104	38.10	47.62	5.24	4.74	NBR	WPS-7318
W29038L502	38.10	47.62	6.85	6.35	PU	WPH-2396
W290381103	38.10	50.80	8.40	7.90	NBR	WPS-6098
W290385907	38.10	50.80	8.50	8.00	PU	WPH-1799
W29038L505	38.10	57.15	10.02	9.52	PU	WPH-2507
W290381101	38.10	57.15	10.02	9.52	NBR	WPS-1521
W29038L506	38.10	57.15	11.61	11.11	PU	WPH-2758
W29038L501	38.10	58.74	11.61	11.11	PU	WPH-679

Bold sizes are readily available in stock.
Other materials are available on request.

W29

Heavy Duty Wiper Seal

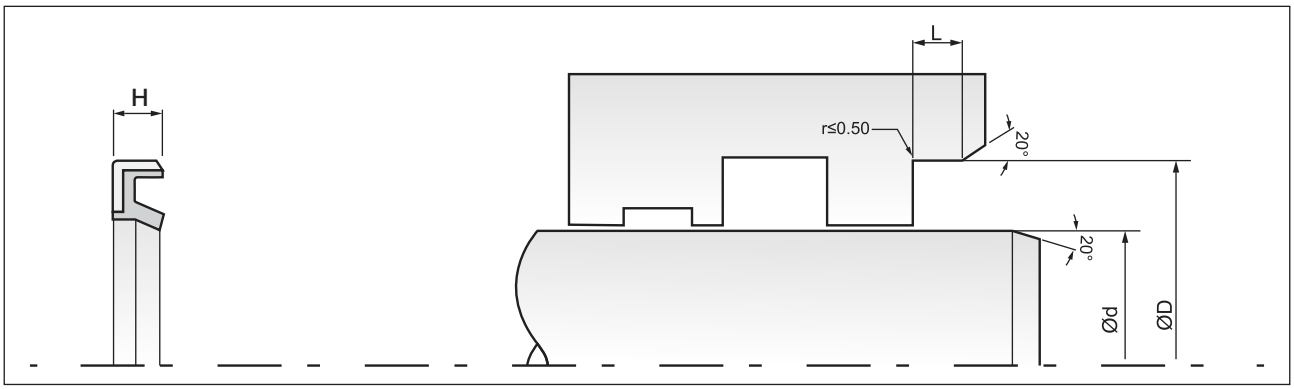

Part No.	d (f8)	D (H9)	L (+0.2)	H	Matl.	Mould No.
W290401106	40.00	48.00	4.50	4.00	NBR	WPS-4623
W290401104	40.00	50.00	4.50	4.00	NBR	WPS-3826
W29040L501	40.00	50.00	4.50	4.00	PU	WPH-1000
W290401002	40.00	50.00	5.50	5.00	NBR	WPS-5206
W29040L504	40.00	50.00	5.50	5.00	PU	WPH-2409
W290401103	40.00	50.00	6.00	5.50	NBR	WPS-3734
W290401105	40.00	50.00	6.50	6.00	NBR	WPS-3839
W290401107	40.00	51.50	7.20	6.70	NBR	WPS-5938
W29040L502	40.00	52.00	7.50	7.00	PU	WPH-2277
W290400901	40.00	52.00	8.00	7.50	NBR	WPS-4422
W290400901	40.00	52.00	8.00	7.50	NBR	WPS-3672
W290405904	40.00	54.00	8.50	8.00	PU	WPH-1896
W290408701	40.00	60.00	4.50	4.00	PU	WPH-2849
W290415902	41.00	60.00	10.00	9.50	PU	WPH-1791
W29041L501	41.27	53.97	6.85	6.35	PU	WPH-2397
W29041L502	41.27	53.97	8.42	7.92	PU	WPH-2398
W290411001	41.50	49.00	4.50	4.00	NBR	WPS-5626
W290421102	42.00	55.00	10.50	10.00	NBR	WPS-3197
W290421103	42.00	62.00	10.50	10.00	NBR	WPS-4364
W290441102	44.45	53.97	5.24	4.74	NBR	WPS-7343
W290441103	44.45	53.97	5.24	4.74	NBR	WPS-7346
W290445904	44.45	53.97	7.50	7.00	PU	WPH-668
W29044L502	44.45	53.97	8.43	7.93	PU	WPH-2467
W290441104	44.45	57.15	6.85	6.35	NBR	WPS-7373
W290441101	44.45	57.15	8.40	7.90	NBR	WPS-6096
W290445905	44.45	57.15	8.50	8.00	PU	WPH-1893
W29044L506	44.45	61.89	10.02	9.52	PU	WPH-2509
W29044L504	44.45	61.90	10.02	9.52	PU	WPH-2493
W29044L507	44.45	61.91	8.43	7.93	PU	WPH-2757
W29044L503	44.45	61.91	11.61	11.11	PU	WPH-2468
W29044L505	44.45	63.50	10.02	9.52	PU	WPH-2497
W290451105	45.00	51.50	5.50	5.00	NBR	WPS-2989
W290451107	45.00	55.00	4.50	4.00	NBR	WPS-3827
W29045L504	45.00	55.00	4.50	4.00	PU	WPH-2261
W290451109	45.00	55.00	6.50	6.00	NBR	WPS-3835
W29045L501	45.00	57.00	7.50	7.00	PU	WPH-630
W290451106	45.00	57.00	10.50	10.00	NBR	WPS-3198
W29045L502	45.00	58.00	8.00	7.50	PU	WPH-1413
W290451108	45.00	60.00	4.50	4.00	NBR	WPS-3828
W29045L503	45.00	60.00	5.50	5.00	PU	WPH-1648
W290456701	45.00	60.00	8.50	8.00	FKM	WPS-3089
W290455901	45.00	60.15	8.25	7.75	PU	WPH-969
W29047L503	47.62	60.32	8.42	7.92	PU	WPH-2399
W29047L501	47.62	65.08	10.02	9.52	PU	WPH-2022
W290481103	48.00	57.00	4.50	4.00	NBR	WPS-4624
W29048L502	48.00	58.00	4.50	4.00	PU	WPH-1555
W290481001	48.00	58.00	5.50	5.00	NBR	WPS-5207
W290481104	48.00	60.00	9.50	9	NBR	WPS-4769
W29048L501	48.90	63.50	8.44	7.94	PU	WPH-1173
W29049L501	49.25	63.50	8.36	7.86	PU	WPH-1172
W29050L505	50.00	60.00	4.50	4.00	PU	WPH-1646
W290501106	50.00	60.00	4.50	4.00	NBR	WPS-3829

Part No.	d (f8)	D (H9)	L (+0.2)	H	Matl.	Mould No.
W29050L507	50.00	60.00	4.50	4.00	PU	WPH-2165
W290501109	50.00	60.00	5.50	5.00	NBR	WPS-4383
W29050L509	50.00	60.00	7.50	7	PU	WPH-2220
W29050L503	50.00	60.00	12.00	11.50	PU	WPH-1428
W290501115	50.00	61.50	7.50	7.00	NBR	WPS-7188
W290501112	50.00	62.00	6.50	6.00	NBR	WPS-5286
W290506702	50.00	62.00	7.30	6.80	FKM	WPS-1663
W290506703	50.00	62.00	7.30	6.80	FKM	WPS-4027
W29050L520	50.00	63.00	8.00	7.50	PU	WPH-2521
W29050L515	50.00	63.00	8.50	8.00	PU	WPH-2411
W290501107	50.00	65.00	4.50	4.00	NBR	WPS-3823
W29050L506	50.00	65.00	8.00	7.50	PU	WPH-1814
W29050L516	50.00	65.00	9.50	9.00	PU	WPH-2461
W29050L501	50.00	68.00	10.50	10.00	PU	WPH-713
W29050L517	50.00	69.00	11.50	11.00	PU	WPH-2462
W290505913	50.00	70.00	8.50	8.00	PU	WPH-2527
W29050L523	50.00	70.00	11.90	11.40	PU	WPH-2799
W290505912	50.00	71.80	13.90	13.40	PU	WPH-2041
W290501110	50.46	63.50	6.85	6.35	NBR	WPS-4935
W290500901	50.75	62.00	9.00	8.50	NBR	WPS-3671
W29050S401	50.80	63.50	6.85	6.35	HNBR	WPS-5401
W290505903	50.80	63.50	6.85	6.35	PU	WPH-644
W290501116	50.80	63.50	6.85	6.35	NBR	WPS-7372
W290501102	50.80	63.50	8.40	7.90	NBR	WPS-6097
W290505911	50.80	63.50	8.50	8.00	PU	WPH-1800
W29050Q201	50.80	63.50	8.50	8.00	PU	WPH-2271
W290505909	50.80	65.08	7.64	7.14	PU	WPH-1295
W29050L521	50.80	66.67	6.85	6.35	PU	WPH-2756
W29050L301	50.80	66.87	6.85	6.35	AFLAS	WPS-5388
W290501117	50.80	68.25	6.85	6.35	NBR	WPS-7414
W29050L518	50.80	68.26	10.02	9.52	PU	WPH-2506
W29050L502	50.80	68.26	10.02	9.52	PU	WPH-1394
W29050L508	50.80	68.26	11.61	11.11	PU	WPH-2184
W29050L511	50.80	69.85	10.02	9.52	PU	WPH-2400
W290501114	50.80	69.85	10.02	9.52	NBR	WPS-6879
W29053L502	53.97	63.50	6.80	6.30	PU	WPH-2465
W29053L501	53.97	63.50	6.85	6.35	PU	WPH-2187
W29053L504	53.97	66.67	6.85	6.35	PU	WPH-2779
W290531102	53.97	66.67	8.43	7.93	NBR	WPS-6030
W290531101	53.97	73.03	6.85	6.35	NBR	WPS-4978
W290551103	55.00	65.00	4.50	4.00	NBR	WPS-3821
W29055L504	55.00	65.00	4.50	4.00	PU	WPH-2264
W290551105	55.00	67.00	6.90	6.40	NBR	WPS-4127
W290551104	55.00	67.00	7.50	7.00	NBR	WPS-3838
W29055L502	55.00	68.00	8.50	8.00	PU	WPH-2012
W290551106	55.00	69.00	8.50	8.00	NBR	WPS-5111
W29055L501	55.00	70.00	7.50	7.00	PU	WPH-814
W290555903	55.00	70.00	8.50	8.00	PU	WPH-970
W290558701	55.00	71.00	9.50	9.00	PU	WPH-1895
W29056L503	56.00	68.00	7.50	7.00	PU	WPH-2522
W290566701	56.00	70.00	8.00	7.50	FKM	WPS-5748
W29056L501	56.00	70.00	8.00	7.50	PU	WPH-2160

Bold sizes are readily available in stock.
Other materials are available on request.

W29

Heavy Duty Wiper Seal

MAX SPARE LIMITED
QUALITY. PRECISION. SPEED.

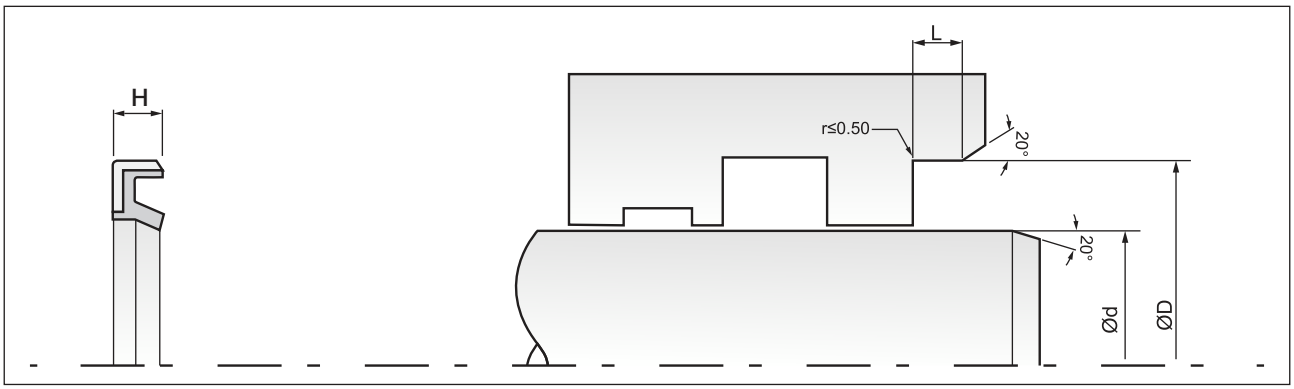

Part No.	d (f8)	D (H9)	L (+0.2)	H	Matl.	Mould No.
W29057L502	57.15	66.67	8.45	7.95	PU	WPH-2401
W290575904	57.15	69.85	5.26	4.76	PU	WPH-1196
W290575902	57.15	69.85	6.85	6.35	PU	WPH-643
W290571103	57.15	69.85	6.85	6.35	NBR	WPS-7374
W290571102	57.15	69.85	8.40	7.90	NBR	WPS-6095
W290575905	57.15	69.85	8.50	8.00	PU	WPH-1802
W29057L501	57.15	73.02	6.85	6.35	PU	WPH-2185
W29057L503	57.15	76.20	10.02	9.52	PU	WPH-2505
W290571101	57.15	76.20	10.02	9.52	NBR	WPS-5774
W290575906	57.15	76.20	10.50	10.00	PU	WPH-1894
W29057L504	57.15	76.20	11.61	11.11	PU	WPH-2768
W290600801	60.00	70.00	4.50	4.00	NBR	WPS-4405
W29060R301	60.00	70.00	6.50	6.00	PU	WPH-1620
W290606703	60.00	70.00	10.00	9.5	FKM	WPS-5586
W290601104	60.00	72.00	7.00	6.50	NBR	WPS-4756
W290601106	60.00	72.00	7.10	6.60	NBR	WPS-5841
W290606702	60.00	72.00	7.30	6.80	FKM	WPS-2273
W290606702	60.00	72.00	7.30	6.80	FKM	WPS-3036
W29060L510	60.00	72.00	7.50	7.00	PU	WPH-2437
W290600802	60.00	73.00	6.50	6.00	NBR	WPS-6440
W29060L502	60.00	74.00	8.50	8.00	PU	WPH-830
W290601102	60.00	75.00	4.50	4.00	NBR	WPS-3825
W29060L504	60.00	75.00	5.50	5.00	PU	WPH-1509
W29060L504	60.00	75.00	5.50	5.00	PU	WPH-1587
W29060L509	60.00	75.00	5.50	5.00	PU	WPH-2412
W29060L501	60.00	75.00	7.50	7.00	PU	WPH-815
W29060L505	60.00	75.00	8.00	7.50	PU	WPH-1813
W29060L503	60.00	75.00	8.50	8.00	PU	WPH-1305
W29060L508	60.32	73.02	8.45	7.95	PU	WPH-2402
W29060L506	60.32	79.37	11.61	11.11	PU	WPH-2056
W290621101	62.00	72.00	7.00	6.50	NBR	WPS-5310
W29063L506	63.00	75.00	8.50	8.00	PU	WPH-2410
W290636702	63.00	77.00	8.50	8.00	FKM/FABRIC	WPS-5149
W290630901	63.00	78.00	9.50	9.00	NBR	WPS-3670
W29063L508	63.00	83.00	10.50	10.00	PU	WPH-2688
W290635901	63.50	73.02	3.67	3.17	PU	WPH-1422
W290635907	63.50	76.00	8.70	8.20	PU	WPH-1514
W290635907	63.50	76.00	8.70	8.20	PU	WPH-1518
W290636701	63.50	76.00	8.70	8.20	FKM	WPS-4905
W29063L509	63.50	76.20	6.85	6.35	PU	WPH-2767
W290636703	63.50	76.20	6.85	6.35	FKM	WPS-6826
W290631103	63.50	76.20	6.85	6.35	NBR	WPS-7395
W290631102	63.50	76.20	8.43	7.93	NBR	WPS-5772
W29063L503	63.50	76.20	8.50	8.00	PU	WPH-2018
W290635908	63.50	76.20	8.50	8.00	PU	WPH-1801
W290638701	63.50	76.20	8.50	8.00	PU	WPH-2499
W290635902	63.50	82.55	6.85	6.35	PU	WPH-646
W29063L504	63.50	82.55	10.02	9.52	PU	WPH-2303
W29063L507	63.50	82.55	10.02	9.52	PU	WPH-2504
W290641102	64.00	76.40	7.50	7.00	NBR	WPS-2300
W290651101	65.00	77.00	7.50	7.00	NBR	WPS-3830
W29065L503	65.00	80.00	8.50	8.00	PU	WPH-2693

Part No.	d (f8)	D (H9)	L (+0.2)	H	Matl.	Mould No.
W29065L502	65.00	80.00	10.50	10.00	PU	WPH-2178
W29065L501	65.08	84.12	11.61	11.11	PU	WPH-2055
W290661101	66.50	75.00	6.80	6.30	NBR	WPS-5285
W290665901	66.67	79.37	6.85	6.35	PU	WPH-645
W29069S401	69.85	82.55	6.85	6.35	HNBR	WPS-5402
W29069L508	69.85	82.55	8.43	7.93	PU	WPH-2513
W290696701	69.85	82.55	9.50	9.00	FKM	WPS-4250
W290691101	69.85	95.25	13.20	12.70	NBR	WPS-1515
W290701104	70.00	80.00	4.50	4.00	NBR	WPS-3824
W290705908	70.00	80.00	5.50	5.00	PU	WPH-1734
W290705907	70.00	80.00	5.50	5.00	PU	WPH-1001
W290701103	70.00	80.00	7.50	7.00	NBR	WPS-2951
W13070L510	70.00	80.00	9.70	9.2	PU	WPH-2492
W29070L507	70.00	84.00	8.80	8.30	PU	WPH-1874
W29070L501	70.00	85.00	4.50	4.00	PU	WPH-607
W290701105	70.00	85.00	4.50	4.00	NBR	WPS-3822
W29070L508	70.00	85.00	4.50	4.00	PU	WPH-2166
W29070L509	70.00	85.00	5.00	4.50	PU	WPH-2262
W29070L502	70.00	85.00	7.50	7.00	PU	WPH-816
W29070L503	70.00	85.00	8.00	7.50	PU	WPH-1114
W29070L506	70.00	85.00	8.00	7.50	PU	WPH-899
W290705909	70.00	85.00	8.50	8.00	PU	WPH-1778
W29070L510	70.00	90.00	10.50	10.00	PU	WPH-2764
W29071L501	71.00	85.00	6.50	6.00	PU	WPH-1329
W290751101	75.00	87.00	6.80	6.30	NBR	WPS-5313
W29075L503	75.00	87.00	7.00	6.50	PU	WPS-5013
W290756701	75.00	87.00	7.30	6.80	FKM	WPS-5799
W290755901	75.00	90.00	8.00	7.50	PU	WPH-418
W29075L504	75.00	90.00	8.00	7.50	PU	WPH-2167
W290755902	75.00	95.00	10.50	10.00	PU	WPH-1296
W290765904	76.20	88.90	8.43	7.93	PU	WPH-1025
W290761102	76.20	88.90	8.43	7.93	NBR	WPS-6342
W29076L501	76.20	95.25	10.02	9.52	PU	WPH-2403
W290761101	76.20	101.60	13.20	12.70	NBR	WPS-5773
W29076L502	76.20	101.60	13.20	12.70	PU	WPH-2508
W290765901	76.50	96.50	10.50	10.00	PU	WPH-1310
W290795903	79.37	95.25	8.43	7.93	PU	WPH-491
W290801102	80.00	90.00	5.00	4.50	NBR	WPS-3923
W29080L503	80.00	90.00	7.50	7.00	PU	WPH-920
W290805902	80.00	95.00	5.50	5.00	PU	WPH-143
W290801103	80.00	95.00	5.50	5.00	NBR	WPS-4384
W29080L502	80.00	95.00	7.50	7.00	PU	WPH-817
W290805907	80.00	95.00	8.00	7.50	PU	WPH-1018
W29080L505	80.00	95.00	8.50	8.00	PU	WPH-2234
W290805908	80.00	95.00	12.50	12.00	PU	WPH-1777
W29080L502	80.00	96.00	6.50	6.00	PU	WPH-784
W290800805	80.00	100.00	6.50	6.00	NBR	WPS-3710
W29080L509	80.00	100.00	7.50	7.00	PU	WPH-2524
W290805906	80.00	100.00	10.50	10.00	PU	WPH-705
W29080L508	80.00	100.00	10.50	10.00	PU	WPH-2523
W29082L502	82.55	95.25	8.50	8.00	PU	WPH-2019
W290821102	82.55	95.25	8.50	8.00	NBR	WPS-5605

Bold sizes are readily available in stock.
Other materials are available on request.

W29

Heavy Duty Wiper Seal

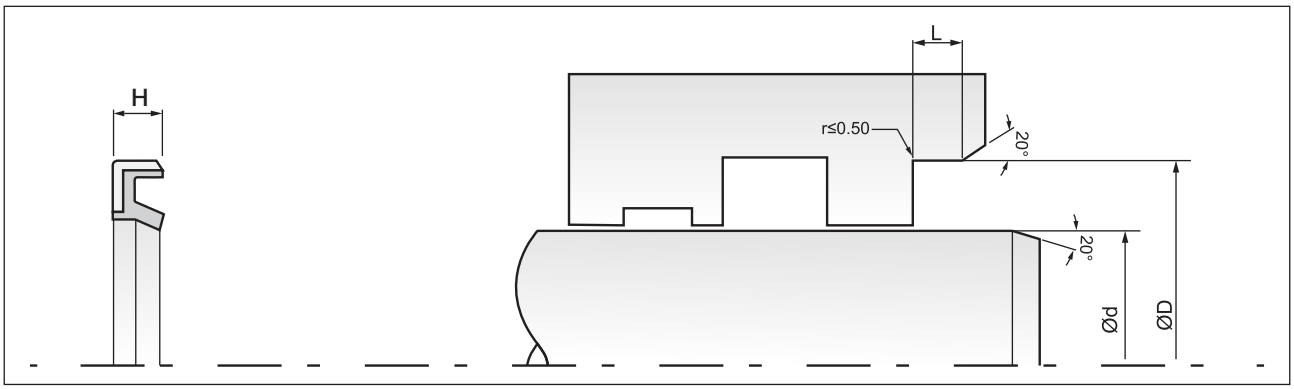

Part No.	d (f8)	D (H9)	L (+0.2)	H	Matl.	Mould No.
W290825903	82.55	98.42	8.45	7.95	PU	WPH-1326
W29082L505	82.55	98.42	8.45	7.95	PU	WPH-2404
W29082L507	82.55	98.45	8.43	7.93	PU	WPH-2765
W29082L506	82.55	107.95	13.20	12.70	PU	WPH-2766
W290848701	84.81	114.80	11.60	11.10	PU	WPH-2301
W29085L503	85.00	97.00	7.00	6.50	PU	WPS-5014
W290855905	85.00	99.00	8.50	8.00	PU	WPH-971
W29085L505	85.00	100.00	4.50	4.00	PU	WPH-2164
W29085L502	85.00	100.00	8.50	8.00	PU	WPH-1203
W29085L502	85.00	100.00	8.50	8.00	PU	WPH-921
W29085L501	85.00	100.00	8.50	8.00	PU	WPH-718
W29085L504	85.00	100.00	10.50	10.00	PU	WPH-1892
W290855901	85.72	101.60	8.43	7.93	PU	WPH-647
W29088L501	88.90	101.60	8.45	7.95	PU	WPH-751
W290881102	88.90	101.60	8.45	7.95	NBR	WPS-5572
W29088L502	88.90	104.75	9.40	8.90	PU	WPH-2186
W29090L502	90.00	100.00	7.50	7.00	PU	WPH-624
W29090L504	90.00	105.00	5.50	5.00	PU	WPH-138
W290901101	90.00	105.00	5.50	5.00	NBR	WPS-4385
W29090L505	90.00	105.00	6.50	6.00	PU	WPH-1019
W29090L501	90.00	106.00	8.50	8.00	PU	WPH-2525
W29090L503	90.00	110.00	8.50	8.00	PU	WPH-822
W290951102	95.00	110.00	8.50	8.00	NBR	WPS-4386
W29095L505	95.00	110.00	10.50	10.00	PU	WPH-2463
W29095L501	95.25	120.65	13.20	12.70	PU	WPH-2017
W290951103	95.25	120.65	13.20	12.70	NBR	WPS-7235
W291001102	100.00	110.00	7.50	7.00	NBR	WPS-7258
W29100L502	100.00	114.00	5.50	5.00	PU	WPH-692
W29100L507	100.00	115.00	4.50	4.00	PU	WPH-2573
W29100L503	100.00	115.00	7.50	7.00	HNBR	WPH-584
W291001101	100.00	115.00	7.50	7.00	NBR	WPS-6446
W29100L504	100.00	115.00	8.50	8.00	PU	WPH-823
W29100L508	100.00	115.00	10.50	10.00	PU	WPH-2598
W29100L505	100.00	116.00	8.50	8.00	PU	WPH-864
W291005906	100.00	118.00	8.50	8.00	PU	WPH-1004
W29100L509	100.00	118.00	8.50	8.00	PU	WPH-2802
W29100L506	100.00	120.00	8.50	8.00	PU	WPH-1739
W29100L501	100.00	120.00	9.00	8.50	PU	WPH-638
W291018701	101.55	114.30	6.85	6.35	PU	WPH-2066
W29101L504	101.60	117.47	8.45	7.95	PU	WPH-2405
W29101L501	101.60	120.65	8.42	7.92	PU	WPH-1395
W29101L505	101.60	120.65	8.45	7.95	PU	WPH-2406
W29101L503	101.60	127.00	14.70	14.20	PU	WPH-2182
W291041101	104.77	120.65	8.42	7.92	NBR	WPS-4661
W29104L501	104.77	120.65	8.42	7.92	PU	WPH-1758
W29107L502	107.95	120.65	8.45	7.95	PU	WPH-2407
W29107L501	107.95	123.82	8.44	7.94	PU	WPH-1759
W291105904	110.00	120.00	6.50	6.00	PU	WPH-1367
W291101105	110.00	120.00	7.50	7.00	NBR	WPS-7259
W29110L511	110.00	125.00	5.50	5.00	PU	WPH-2807
W29110L510	110.00	125.00	8.00	7.50	PU	WPH-2448
W29110L507	110.00	125.00	8.50	8.00	PU	WPH-1879

Part No.	d (f8)	D (H9)	L (+0.2)	H	Matl.	Mould No.
W29110L505	110.00	125.00	8.50	8.00	PU	WPH-1859
W291101102	110.00	125.00	8.50	8.00	NBR	WPS-4387
W29110L504	110.00	125.00	9.50	9.00	PU	WPH-1687
W29110L509	110.00	125.00	10.00	9.50	PU	WPH-2445
W29110L508	110.00	125.00	10.50	10.00	PU	WPH-2152
W29110L503	110.00	130.00	7.50	7.00	PU	WPH-846
W29110L501	110.00	130.00	8.50	8.00	PU	WPH-759
W291101103	110.00	130.00	8.50	8.00	NBR	WPS-6447
W291101106	110.00	130.00	10.50	10.00	NBR	WPS-7260
W291101101	110.00	135.00	8.50	8.00	NBR	WPS-2269
W29110L502	110.00	135.00	8.50	8.00	PU	WPH-845
W29114L507	114.30	127.00	8.45	7.95	PU	WPH-2408
W29114L502	114.30	130.17	8.45	7.95	PU	WPH-1139
W29114L505	114.30	139.70	13.20	12.70	PU	WPH-2010
W291155902	115.00	130.00	14.50	14.00	PU	WPH-625
W291151102	115.00	135.00	8.50	8.00	NBR	WPS-7261
W291201105	120.00	130.00	7.50	7.00	NBR	WPS-7262
W291205903	120.00	135.00	4.50	4.00	PU	WPH-1345
W29120L505	120.00	135.00	7.50	7.00	PU	WPH-1878
W29120L509	120.00	135.00	8.00	7.50	PU	WPH-2446
W29120L503	120.00	135.00	8.50	8.00	PU	WPH-946
W29120L505	120.00	136.00	9.50	9.00	PU	WPH-1475
W29120L502	120.00	140.00	8.50	8.00	PU	WPH-765
W291201102	120.00	140.00	8.50	8.00	NBR	WPS-2270
W291201106	120.00	140.00	8.50	8.00	NBR	WPS-7263
W29120L508	120.00	140.00	9.00	8.50	PU	WPH-2447
W29120L506	120.00	140.00	9.50	9.00	PU	WPH-1877
W29120L502	120.00	140.00	10.50	10.00	PU	WPH-1872
W29120L504	120.00	150.00	12.00	11.50	PU	WPH-959
W29120L501	120.00	150.00	12.50	12.00	PU	WPH-612
W291201103	120.65	136.52	8.43	7.93	NBR	WPS-3920
W291201104	120.65	146.05	13.20	12.70	NBR	WPS-6341
W29125L501	125.00	150.00	10.50	10.00	PU	WPH-954
W291261101	126.00	140.00	7.50	7.00	NBR	WPS-3925
W291278701	127.00	142.87	8.45	7.95	PU	WPH-1237
W29127L501	127.00	146.05	8.43	7.93	PU	WPH-2092
W29130L507	130.00	140.00	7.50	7.00	PU	WPH-1186
W29130L508	130.00	140.00	7.50	7.00	PU	WPH-2818
W29130L504	130.00	145.00	7.50	7.00	PU	WPH-1351
W291301104	130.00	145.00	8.00	7.50	NBR	WPS-7265
W291301103	130.00	145.00	10.50	10.00	NBR	WPS-7264
W291305903	130.00	146.00	9.50	9.00	PU	WPH-1486
W29130L506	130.00	150.00	8.50	8.00	PU	WPH-2100
W291301102	130.00	150.00	8.50	8.00	NBR	WPS-6448
W29130L509	130.00	150.00	10.50	10.00	PU	WPH-2823
W29130L505	130.00	154.00	8.50	8.00	PU	WPH-1472
W291301105	130.00	155.00	10.50	10.00	NBR	WPS-7266
W29130L502	130.00	160.00	8.50	8.00	PU	WPH-744
W29130L503	130.00	160.00	12.00	11.50	PU	WPH-958
W29130L501	130.00	160.00	12.50	12.00	PU	WPH-611
W29133L501	133.35	146.05	8.42	7.92	PU	WPH-2123
W29139L502	139.70	155.57	10.02	9.52	PU	WPH-489

Bold sizes are readily available in stock.
Other materials are available on request.

W29

Heavy Duty Wiper Seal

MAX SPARE LIMITED
QUALITY. PRECISION. SPEED.

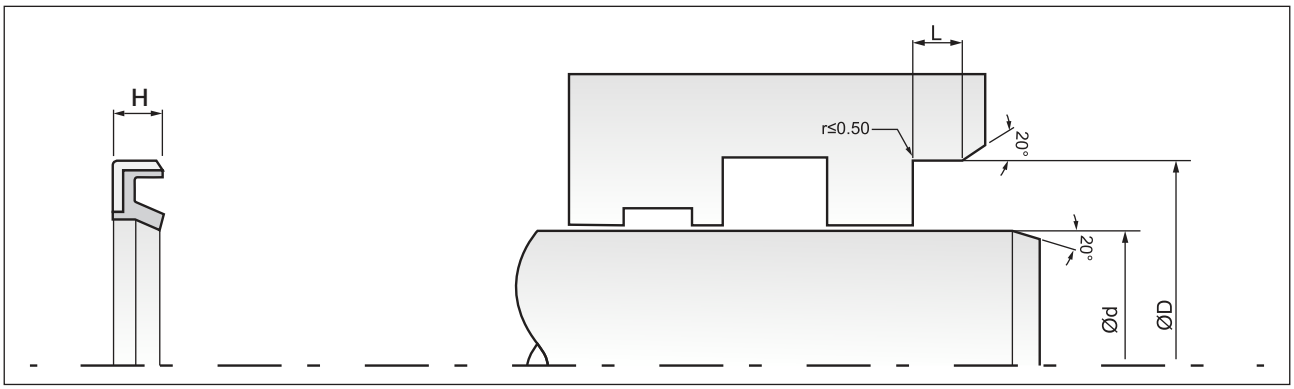

Part No.	d (f8)	D (H9)	L (+0.2)	H	Matl.	Mould No.
W29139L501	139.70	158.75	11.00	10.50	PU	WPH-639
W29140L503	140.00	150.00	7.50	7.00	PU	WPH-1694
W29140L502	140.00	170.00	12.00	11.50	PU	WPH-960
W29140L501	140.00	170.00	12.50	12.00	PU	WPH-610
W29145R301	145.00	160.00	8.50	8.00	PU	WPH-1621
W291505902	150.00	160.00	7.50	7.00	PU	WPH-1354
W29150L502	150.00	160.00	7.50	7.00	PU	WPH-1991
W291505901	150.00	165.00	8.50	8.00	PU	WPH-698
W291501101	150.00	165.00	8.50	8.00	NBR	WPS-3208
W291501102	150.00	170.00	10.50	10.00	NBR	WPS-7267
W29150L501	150.00	180.00	10.50	10.00	PU	WPH-953
W291528701	152.40	168.27	10.02	9.52	PU	WPH-793
W291605902	160.00	175.00	8.50	8.00	PU	WPH-699
W29160L502	160.00	175.00	10.50	10.00	PU	WPH-968
W29160L501	160.00	184.00	8.50	8.00	PU	WPH-623
W291605903	160.00	190.00	10.50	10.00	PU	WPH-717
W29160L503	160.00	190.00	13.50	13.00	PU	WPH-2372
W29160L504	160.00	190.00	15.50	15.00	PU	WPH-2881
W29165L501	165.10	183.97	10.02	9.52	PU	WPH-752
W29170L501	170.00	190.00	8.50	8.00	PU	WPH-868
W29170L503	170.00	190.00	9.50	9.00	PU	WPH-2689
W29170L502	170.00	200.00	13.50	13.00	PU	WPH-2371
W29171L501	171.45	196.85	13.20	12.70	PU	WPH-2464
W291775901	177.80	196.85	8.44	7.94	PU	WPH-391
W29177L501	177.80	203.20	13.20	12.70	PU	WPH-420
W29175904	177.80	206.37	16.37	15.87	PU	WPH-1350

Part No.	d (f8)	D (H9)	L (+0.2)	H	Matl.	Mould No.
W291808701	180.00	200.00	10.50	10.00	PU	WPH-2438
W29180L501	180.00	210.00	8.50	8.00	PU	WPH-1471
W29180L502	180.00	210.00	12.50	12.00	PU	WPH-2370
W291845901	184.15	203.20	8.43	7.93	PU	WPH-1002
W291855901	185.00	210.00	17.50	17	PU	WPH-2027
W29190L501	190.00	210.00	10.50	10.00	PU	WPH-642
W291901001	190.00	213.50	8.80	8.30	NBR	WPS-2225
W29200L501	200.00	220.00	9.50	9.00	PU	WPH-1830
W292005901	200.00	220.00	12.50	12.00	PU	WPH-1017
W292005902	200.00	230.00	12.50	12.00	PU	WPH-1262
W29200L503	200.00	230.00	12.50	12.00	PU	WPH-2773
W29200L502	200.00	230.00	13.50	13.00	PU	WPH-2369
W29200L504	200.00	235.00	15.50	15.00	PU	WPH-2772
W29203L501	203.20	222.25	10.02	9.52	PU	WPH-2817
W292035903	203.20	222.25	19.55	19.05	PU	WPH-706
W29215L501	215.90	231.77	10.02	9.52	PU	WPH-1776
W292226701	222.25	254.00	19.55	19.05	FKM	WPS-5535
W29230L501	230.00	260.00	10.50	10.00	PU	WPH-2210
W29240L501	240.00	275.00	15.50	15.00	PU	WPH-2774
W292501101	250.00	272.00	8.50	8.00	NBR	WPS-4291
W29254L501	254.00	279.40	13.20	12.70	PU	WPH-1150
W29260L501	260.00	290.00	10.50	10.00	PU	WPH-1353
W29300R301	300.00	330.00	10.50	10.00	PU	WPH-1753
W29381L501	381.00	406.40	14.47	13.97	PU	WPH-2051
W294251101	425.50	463.55	24.00	23.50	NBR	WPS-4704

Bold sizes are readily available in stock.
Other materials are available on request.

W30

Heavy Duty Wiper Seal

DETAILS

W30 wipers are used in applications where standard elastomer wipers fails quickly as a result of contaminants adhering to the piston rod. The wiper comprises a metal housing with an integral brass scraper and elastomeric wiper ring. The brass scraper has radial clearance in the housing. The brass scraper removes any stubborn dirt from the rod, leaving the secondary elastomer wiper to remove smaller loose particles of dust, water etc. These wipers are mainly used in dusty environment like mining & steel works.

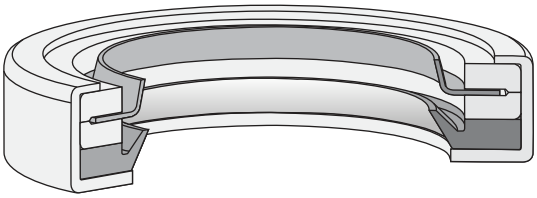

COMPATIBILITY

Mineral oils, bio oils, water soluble & water glycol fluids.

MATERIAL

Primary Lip : Brass
Secondary Lip : Nitrile Rubber / FKM
Metal Cup : MS/SS-304/CRCA
(Choose material as per your application).

APPLICATION

- Heavy duty applications.
- Wiper for hydraulic cylinders.

OPERATING CONDITIONS

Temperature Range : -30°C to + 100°C
Speed : 1.0 m/s

FEATURES

- Very good wiping performance.
- Subjected to heavy & dusty areas.
- Seal retainer not required.
- Easy installation in open grooves.
- Maximum advantages compared to elastomeric wipers.
- Long service life.

SURFACE ROUGHNESS

Static : 0.8 µmRa
Dynamic : 0.4 µmRa

INSTALLATION & ASSEMBLY

W30 seals are press fit into axially open grooves. The fitting tool must have no sharp edges. The seal must lubricate before installation.

W30

Heavy Duty Wiper Seal

MAX SPARE LIMITED
QUALITY. PRECISION. SPEED.

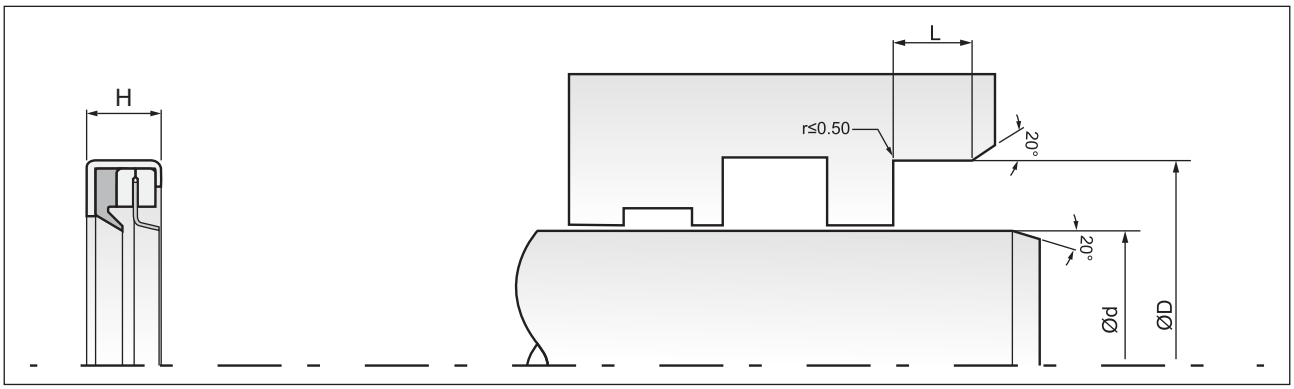

Part No.	d (f8)	D (H9)	L (+0.2)	H	Matl.	Mould No.
W300121101	12.00	25.00	7.00	6.50	NBR	WPS-2390
W300126601	12.00	25.00	7.50	7.00	FKM	WPS-2165
W300141003	14.00	27.00	7.00	6.50	NBR	WPS-2340
W300141103	14.00	27.00	7.00	6.50	NBR	WPS-3081
W300146701	14.00	27.00	7.00	6.50	FKM	WPS-3303
W300146602	14.00	27.00	7.00	6.50	FKM	WPS-3386
W300141105	14.00	27.00	7.00	6.50	NBR	WPS-6253
W300141102	14.00	27.00	8.40	7.90	NBR	WPS-3019
W300151103	15.00	28.00	7.00	6.50	NBR	WPS-3679
W300151005	15.80	28.65	7.50	7.14	NBR	WPS-7200
W300161101	16.00	29.00	7.00	6.50	NBR	WPS-1139
W300181101	18.00	31.00	7.00	6.50	NBR	WPS-2714
W300181104	18.00	31.00	7.50	7.00	NBR	WPS-6272
W300181103	18.00	31.00	8.30	7.80	NBR	WPS-2996
W30019L501	19.05	31.75	8.40	7.90	PU	WPH-961
W300206703	20.00	32.00	7.50	7.00	FKM	WPS-7467
W300206701	20.00	33.00	7.00	6.50	FKM	WPS-3635
W300201101	20.00	33.00	7.00	6.50	NBR	WPS-1875
W300201103	20.00	33.00	7.50	7.00	NBR	WPS-4023
W300206702	20.00	33.00	7.50	7.00	FKM	WPS-4093
W300226401	22.00	35.00	7.00	6.50	FKM	WPS-3697
W300221105	22.00	35.00	7.00	6.50	NBR	WPS-6028
W300221102	22.00	35.00	7.00	6.50	NBR	WPS-3880
W300226601	22.00	35.00	7.50	7.00	FKM	WPS-1888
W300221106	22.22	34.93	7.50	7.14	NBR	WPS-7129
W300251104	25.00	38.00	7.00	6.50	NBR	WPS-1668
W300256703	25.00	38.00	7.00	6.50	FKM	WPS-3465
W300256706	25.00	38.00	7.00	6.50	FKM	WPS-7310
W300250801	25.40	38.10	7.50	7.14	NBR	WPS-4484
W300251105	25.40	38.10	8.44	7.94	NBR	WPS-7128
W300286601	28.00	41.00	7.00	6.50	FKM	WPS-1734
W300286702	28.00	41.00	7.00	6.50	FKM	WPS-7309
W300286602	28.00	41.00	7.50	7.00	FKM	WPS-7205
W300281102	28.57	41.27	7.73	7.23	NBR	WPS-5725
W300280801	28.58	41.28	7.50	7.14	NBR	WPS-4278
W300306602	30.00	42.00	7.50	7.14	FKM	WPS-1729
W300301102	30.00	43.00	7.50	7.00	NBR	WPS-1057
W300306701	30.00	43.00	7.50	7.00	FKM	WPS-3926
W300306601	30.00	43.00	8.00	7.50	FKM	WPS-2234
W300316702	31.75	44.45	13.50	13.00	FKM	WPS-7187
W300311103	31.75	44.50	7.50	7.14	NBR	WPS-1752
W300316701	31.75	50.85	7.70	7.20	FKM	WPS-4562
W300326702	32.00	42.00	7.50	7.00	FKM	WPS-4095
W300326703	32.00	45.00	7.50	7.00	FKM	WPS-7516
W300321104	32.00	45.00	8.00	7.50	NBR	WPS-7057
W300346601	34.92	44.96	8.75	8.25	FKM	WPS-2305
W300351105	35.00	47.63	7.50	7.14	NBR	WPS-6410
W300356601	35.00	48.00	7.50	7.00	FKM	WPS-2675
W300351103	35.00	48.00	7.50	7.00	NBR	WPS-4161
W300351106	35.00	48.00	8.00	7.50	NBR	WPS-7030
W300366602	36.00	45.00	5.50	5.00	FKM	WPS-4083
W300361102	36.00	49.00	7.50	7.00	NBR	WPS-2655

Part No.	d (f8)	D (H9)	L (+0.2)	H	Matl.	Mould No.
W300366701	36.00	49.00	7.50	7.00	FKM	WPS-3558
W300366705	36.00	49.00	7.50	7.00	FKM	WPS-7308
W300366704	36.00	49.00	8.00	7.50	FKM	WPS-4750
W300381102	38.10	50.80	7.50	7.14	NBR	WPS-1224
W300406709	40.00	52.00	7.50	7.14	FKM	WPS-1412
W300401105	40.00	52.10	7.50	7.14	NBR	WPS-3015
W300406401	40.00	53.00	7.50	7.00	FKM	WPS-3450
W300401103	40.00	53.00	8.00	7.50	NBR	WPS-2582
W300406706	40.00	53.15	6.00	5.50	FKM	WPS-4166
W300441004	44.45	57.15	7.50	7.14	NBR	WPS-3114
W300456605	45.00	57.00	7.50	7.00	FKM	WPS-6420
W300451005	45.00	58.00	7.50	7.00	NBR	WPS-1092
W300456601	45.00	58.00	7.50	7.00	FKM	WPS-2713
W300456402	45.00	58.00	8.00	7.50	FKM	WPS-2116
W300451103	45.00	58.00	10.50	10.00	NBR	WPS-6491
W300451004	45.00	60.00	8.00	7.50	NBR	WPS-2248
W300501103	50.00	64.00	8.00	7.50	NBR	WPS-2583
W300506401	50.00	64.00	8.00	7.50	FKM	WPS-3234
W300501115	50.00	65.00	7.50	7.10	NBR	WPS-6741
W300506403	50.00	65.00	7.50	7.14	FKM	WPS-4139
W300501107	50.00	65.00	8.00	7.50	NBR	WPS-4018
W300506706	50.00	65.00	8.00	7.50	FKM	WPS-4751
W300506709	50.00	65.00	8.40	7.90	FKM	WPS-7411
W300506704	50.00	72.00	8.00	7.50	FKM	WPS-4286
W300501106	50.80	63.50	7.50	7.14	NBR	WPS-3784
W300506708	50.80	63.50	10.50	10	FKM	WPS-5640
W300500801	50.80	63.55	8.40	7.90	NBR	WPS-3786
W300551103	55.00	69.00	8.00	7.50	NBR	WPS-7486
W300556702	55.00	69.00	8.50	8.00	FKM	WPS-3279
W300551102	55.00	70.00	8.00	7.50	NBR	WPS-3013
W300556704	55.00	70.00	8.00	7.50	FKM	WPS-5187
W300561103	56.00	69.00	7.50	7.14	NBR	WPS-2678
W300561102	56.00	69.00	8.49	7.99	NBR	WPS-2613
W300566602	56.00	69.00	8.49	7.99	FKM	WPS-2406
W300566702	56.00	70.00	7.50	7.00	FKM	WPS-7058
W300561105	56.00	70.00	8.00	7.50	NBR	WPS-1253
W300581101	58.00	72.00	8.00	7.50	NBR	WPS-4061
W300591101	59.00	69.00	7.50	7.14	NBR	WPS-2389
W300601103	60.00	70.00	7.50	7.00	NBR	WPS-3039
W300606401	60.00	74.00	8.00	7.50	FKM	WPS-4615
W300606702	60.00	74.00	8.50	8.00	FKM	WPS-5911
W300601102	60.00	74.00	8.50	8.00	NBR	WPS-2581
W300606704	60.00	74.00	8.50	8.00	FKM	WPS-7035
W300606705	60.00	75.00	8.00	7.50	FKM	WPS-6589
W300631103	63.00	76.00	7.50	7.00	NBR	WPS-2674
W300636401	63.00	77.00	8.00	7.50	FKM	WPS-2914
W300631101	63.00	77.00	8.00	7.50	NBR	WPS-1727
W300631007	63.50	76.20	7.50	7.14	NBR	WPS-2839
W300631005	63.50	77.59	8.50	8.00	NBR	WPS-2070
W300631006	63.50	79.40	7.50	7.14	NBR	WPS-2343
W300656701	65.00	79.00	8.00	7.50	FKM	WPS-4266
W300651001	65.00	79.00	8.00	7.50	NBR	WPS-2265

Bold sizes are readily available in stock.
Other materials are available on request.

MAX SPARE LIMITED
QUALITY. PRECISION. SPEED.

W30

Heavy Duty Wiper Seal

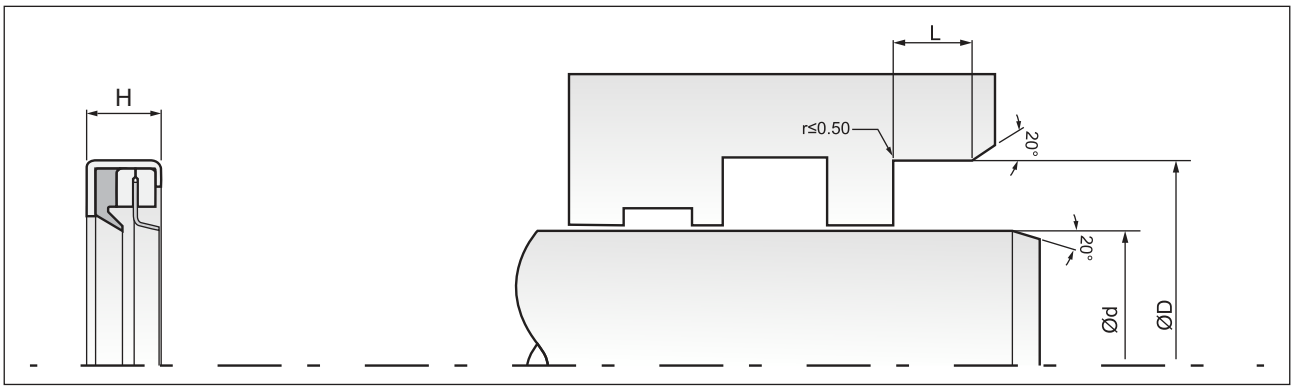

Part No.	d (f8)	D (H9)	L (+0.2)	H	Matl.	Mould No.
W300651103	65.00	79.00	8.00	7.50	NBR	WPS-7487
W300656702	65.00	80.00	8.50	8.00	FKM	WPS-5385
W300691002	69.85	82.55	8.43	7.93	NBR	WPS-4229
W300696601	69.85	82.70	7.50	7.14	FKM	WPS-834
W300701105	70.00	82.55	7.50	7.14	NBR	WPS-4036
W300706601	70.00	84.00	8.00	7.50	FKM	WPS-1229
W300706401	70.00	84.00	8.00	7.50	FKM	WPS-2916
W300701102	70.00	85.00	7.50	7.00	NBR	WPS-2656
W300751102	75.00	89.00	8.00	7.50	NBR	WPS-2979
W300761101	76.20	88.90	7.50	7.14	NBR	WPS-4346
W300801103	80.00	90.00	7.50	7.00	NBR	WPS-3040
W300801104	80.00	95.00	8.83	8.33	NBR	WPS-3123
W300801102	80.00	96.00	8.50	8.00	NBR	WPS-3045
W300806601	80.00	96.00	8.50	8.00	FKM	WPS-2756
W300856701	85.00	101.00	9.00	8.50	FKM	WPS-5819
W30886701	88.90	101.60	10.50	10	FKM	WPS-5636
W30090E304	90.00	100.00	7.50	7.00	NBR	WPS-5561
W300901106	90.00	100.00	9.00	8.50	NBR	WPS-7280
W300901104	90.00	100.00	9.50	9.00	NBR	WPS-4143
W300900801	90.00	106.00	8.50	8.00	NBR	WPS-1278
W300901101	90.00	106.00	8.50	8.00	NBR	WPS-3484
W300901102	90.00	110.00	8.83	8.33	NBR	WPS-2679
W300951101	95.00	111.00	8.50	8.00	NBR	WPS-3680
W301001103	100.00	110.00	7.50	7.00	NBR	WPS-2982
W301001105	100.00	115.00	10.50	10.00	NBR	WPS-4957
W301006701	100.00	120.00	9.00	8.50	FKM	WPS-3634
W301001104	100.00	120.00	9.00	8.50	NBR	WPS-1682
W301036701	103.00	123.00	12.50	12.00	FKM	WPS-6279
W301100801	110.00	130.00	9.00	8.50	NBR	WPS-1180
W301151001	115.00	130.00	8.50	8.00	NBR	WPS-2222
W301151101	115.00	135.00	9.50	9.00	NBR	WPS-3595
W301201103	120.00	140.00	7.50	7.00	NBR	WPS-4821
W301201101	120.00	140.00	9.00	8.50	NBR	WPS-3113
W301206401	120.00	140.00	9.00	8.50	FKM	WPS-3768
W301251105	125.00	140.00	9.50	9.00	NBR	WPS-7294
W301251103	125.00	142.00	10.50	10.00	NBR	WPS-4958
W301256701	125.00	145.00	9.00	8.50	FKM	WPS-2980
W301301102	130.00	150.00	9.00	8.50	NBR	WPS-2787
W301306401	130.00	150.00	9.00	8.50	FKM	WPS-3578

Part No.	d (f8)	D (H9)	L (+0.2)	H	Matl.	Mould No.
W301306701	130.00	150.00	9.50	9.00	FKM	WPS-2149
W301301104	130.00	150.00	9.50	9.00	NBR	WPS-6901
W301406601	140.00	149.00	8.50	8.00	FKM	WPS-3131
W301406603	140.00	150.00	8.50	8.00	FKM	WPS-4257
W301406602	140.00	152.00	8.50	8.00	FKM	WPS-4258
W301406702	140.00	160.00	9.00	8.50	FKM	WPS-2915
W301401102	140.00	160.00	9.00	8.50	NBR	WPS-2567
W301506601	150.00	165.00	9.00	8.50	FKM	WPS-1980
W301521101	152.40	172.40	9.50	9.00	NBR	WPS-5166
W301551101	155.00	175.00	9.50	9.00	NBR	WPS-3667
W301601101A	160.00	180.00	9.00	8.50	NBR	WPS-3021
W301701101	170.00	190.00	9.00	8.50	NBR	WPS-4274
W301706401	170.00	190.00	9.00	8.50	FKM	WPS-4369
W30170E301	170.00	193.00	20.72	20.22	NBR	WPS-2201
W301776401	177.80	190.50	7.00	6.50	FKM	WPS-2926
W301776701	177.80	196.85	10.02	9.52	FKM	WPS-3787
W301781101	178.60	193.50	8.50	8.00	NBR/FABRIC	WPS-1433
W301801101	180.00	200.00	10.50	10.00	NBR	WPS-3629
W301806402	180.00	200.00	10.50	10.00	FKM	WPS-5323
W301856401	185.00	200.00	10.50	10.00	FKM	WPS-3233
W30185E301	185.00	208.00	19.72	19.22	NBR	WPS-2200
W302001102	200.00	220.00	9.00	8.50	NBR	WPS-3605
W302001104	200.00	220.00	12.50	12.00	NBR	WPS-7477
W302001101	200.00	230.00	10.50	10.00	NBR	WPS-1961
W302006601	200.00	230.00	10.50	10.00	FKM	WPS-4087
W302151101	215.90	241.30	13.20	12.70	NBR	WPS-2041
W302201103	220.00	240.00	10.50	10.00	NBR	WPS-3684
W302206702	220.00	250.00	10.50	10.00	FKM	WPS-3792
W302301101	230.00	250.00	10.50	10.00	NBR	WPS-3992
W302306702	230.00	260.00	10.50	10.00	FKM	WPS-5669
W302401101	240.00	270.00	10.50	10.00	NBR	WPS-3993
W30245E301	245.40	265.35	14.50	14.00	NBR	WPS-6546
W302501102	250.00	280.00	10.50	10.00	NBR	WPS-3775
W302506601	250.00	285.00	10.50	10.00	FKM	WPS-1647
W302606701	260.00	300.00	12.50	12.00	FKM	WPS-3284
W303206701	320.00	350.00	10.50	10.00	FKM	WPS-5668
W304106701	410.00	440.00	10.50	10.00	FKM	WPS-5667
W304406701	440.00	490.00	15.50	15.00	FKM	WPS-6418

Bold sizes are readily available in stock.
Other materials are available on request.

W13

Heavy Duty Wiper Seal

DETAILS

W13 wiper is a double lip function seal designed to prevent the ingress of contaminants to enter in to the system and assist in sealing the rod. This is achieved by a special design which largely prevents scoring, protects the guiding parts and extends the service life of the seal. In addition, the sealing lip facing the media reduces the residual oil film. providing a simple groove design this wiper is supplied as a continuous ring for easy installation into the groove.

The standard material for W13 wiper seal is polyurethane material. The use of Polyurethane with it's excellent properties combined with the proportioned design of the wiper will extend the service life of the rod seal. This wiper seal is also available in NBR material on request.

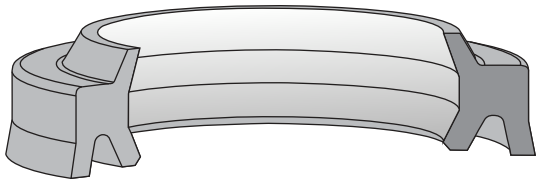

COMPATIBILITY

Mineral oils, bio oils, water soluble & water glycol fluids.

MATERIAL

Polyurethane 92 Shore A

APPLICATION

- Construction, Injection and Agricultural machineries.
- Fork-lift trucks & standard cylinders

OPERATING CONDITIONS

Temperature Range : -30°C to + 100°C
Speed : 1.0 m/s

FEATURES

- Good wiping performance.
- General purpose seal.
- No twisting in the grooves.
- Twins lip ensures drier sealing.
- Easy installation.
- Good stability.

SURFACE ROUGHNESS

Static : 0.8 μmRa
Dynamic : 0.4 μmRa

INSTALLATION & ASSEMBLY

Wiper seal can be easily fitted into the closed grooves by deforming it into kidney shape. The assembly tool must have no sharp edges. The seal must lubricate before installation.

W13

Heavy Duty Wiper Seal

MAX SPARE LIMITED
QUALITY. PRECISION. SPEED.

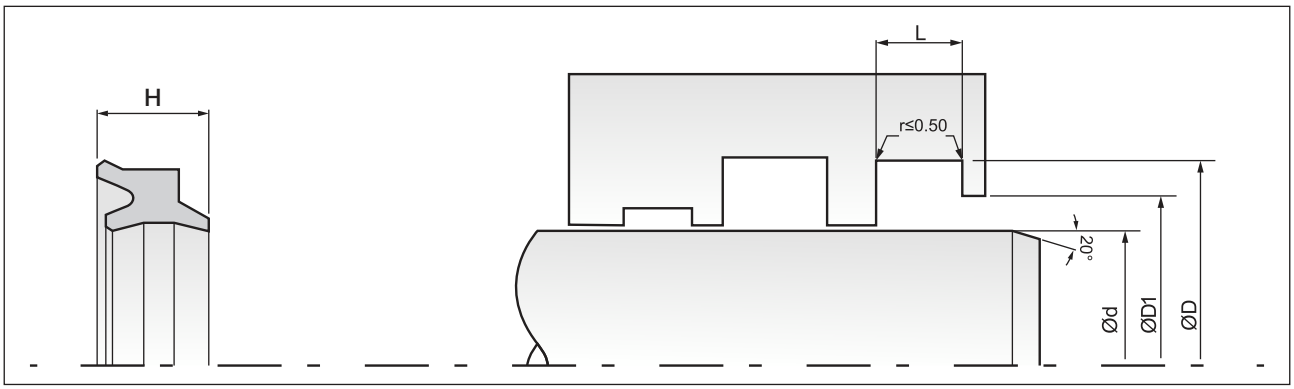

Part No.	d (f8)	D (H9)	L (+0.2)	H	Matl.	Mould No.
W130026201	2.00	9.00	4.00	5.20	FKM	WPS-4559
W13003L401	3.00	9.00	3.00	4.00	PU	WPH-2559
W130036601	3.00	9.00	4.00	5.50	FKM	WPS-2150
W130040801	4.00	8.00	2.50	3.40	NBR	WPS-4406
W13004L501	4.00	8.20	2.50	4.00	PU	WPH-2653
W13005L501	5.00	10.00	3.00	5.00	PU	WPH-900
W130061101	6.00	8.50	1.90	2.70	NBR	WPS-3229
W130066701	6.00	9.00	2.20	2.80	FKM	WPS-6949
W130061103	6.00	9.00	2.25	3.00	NBR	WPS-6393
W13006L401	6.00	9.00	2.50	4.00	PU	WPH-2195
W130061105	6.00	10.00	3.00	4.30	NBR	WPS-7043
W130061104	6.00	10.00	3.00	4.30	NBR	WPS-6871
W130061102	6.00	10.00	3.00	4.40	NBR	WPS-6233
W130061003	6.00	11.00	4.00	5.00	NBR	WPS-3924
W13006L501	6.00	11.20	3.30	5.00	PU	WPH-2646
W130061004	6.00	15.00	5.00	7.00	NBR	WPS-5219
W130071101	7.00	11.50	2.50	3.00	NBR	WPS-1007
W13007L502	7.00	12.00	3.20	4.50	PU	WPH-1726
W13007L501	7.00	12.00	3.30	4.50	PU	WPH-1718
W130081108	8.00	11.00	2.90	3.70	NBR	WPS-6041
W130084601	8.00	11.00	2.90	3.70	VMQ	WPS-6544
W13008L501	8.00	11.50	2.50	3.20	PU	WPH-710
W130086601	8.00	11.50	2.50	3.20	FKM	WPS-6621
W130081106	8.00	11.50	2.50	3.60	NBR	WPS-5179
W130081102	8.00	11.50	2.70	3.20	NBR	WPS-3696
W13008L503	8.00	12.00	2.50	3.50	PU	WPH-2145
W130081109	8.00	12.00	3.50	4.10	NBR	WPS-6351
W13008L301	8.00	12.00	3.50	4.70	AFLAS	WPS-5785
W130081103	8.00	12.00	3.50	4.90	NBR	WPS-3870
W130081101	8.00	12.00	3.50	5.00	NBR	WPS-3460
W130086701	8.00	12.80	4.00	5.20	FKM	WPS-3983
W13008D601	8.00	13.00	3.25	4.30	HNBR	WPS-3105
W130081107	8.00	13.00	3.30	4.40	NBR	WPS-5751
W130081105	8.00	13.00	3.50	4.10	NBR	WPS-4560
W13008L502	8.00	13.00	3.50	4.10	PU	WPH-756
W130086702	8.00	13.00	4.00	5.00	FKM	WPS-5243
W13008L504	8.00	14.00	3.00	5.50	PU	WPH-2592
W13008L505	8.00	14.20	3.30	5.00	PU	WPH-2647
W13028L505	8.00	36.00	4.00	6.00	PU	WPH-1695
W130385901	8.10	47.63	4.95	8.00	PU	WPH-993
W130084602	8.20	12.20	3.00	5.00	VMQ	WPS-6720
W130091103	9.00	16.00	5.00	6.50	NBR	WPS-7348
W13009U301	9.50	14.50	4.00	6.00	FKM	WPS-7059
W130091101	9.50	16.00	3.50	4.10	NBR	WPS-3873
W130091102	9.52	17.45	4.92	6.22	NBR	WPS-6882
W13010L301	10.00	13.70	3.50	4.80	AFLAS	WPS-6591
W13010L516	10.00	14.00	2.50	3.50	PU	WPH-2588
W130106703	10.00	14.00	2.80	3.30	FKM	WPS-6908
W13010T901	10.00	14.00	2.90	3.70	FKM	WPS-7168
W130101106	10.00	14.00	3.00	4.00	NBR	WPS-5115
W13010L503	**10.00**	**14.00**	**3.00**	**4.00**	**PU**	**WPH-947**
W130106702	10.00	14.00	3.00	4.00	FKM	WPS-6626

Part No.	d (f8)	D (H9)	L (+0.2)	H	Matl.	Mould No.
W13010L517	10.00	14.00	3.10	3.70	PU	WPH-2648
W130101113	10.00	14.00	3.20	4.20	NBR	WPS-6684
W130106701	10.00	14.00	3.50	4.10	FKM	WPS-4246
W130101104	10.00	14.00	3.50	4.10	NBR	WPS-4065
W130103201	10.00	14.00	3.50	4.70	EPDM	WPS-7195
W130101105	10.00	14.00	3.50	5.00	NBR	WPS-5236
W130101101	10.00	14.00	3.80	5.50	NBR	WPS-2301
W130101109	10.00	14.00	4.70	6.20	NBR	WPS-6043
W13010L510	10.00	15.00	3.00	4.00	PU	WPH-2013
W13010L513	10.00	16.00	2.80	3.50	PU	WPH-1654
W130101110	10.00	16.00	2.80	4.00	NBR	WPS-6125
W13010L501	**10.00**	**16.00**	**3.60**	**4.80**	**PU**	**WPH-218**
W13010L501	10.00	16.00	3.60	4.80	PU	WPH-2315
W13010L515	10.00	16.00	3.60	4.80	PU	WPH-2413
W130101107	10.00	16.00	3.80	4.80	NBR	WPS-5517
W130101103	10.00	16.00	4.00	4.80	NBR	WPS-3232
W13010L504	10.00	16.00	4.00	5.00	PU	WPH-1178
W13010L505	10.00	16.00	4.50	6.00	PU	WPH-1563
W13010L518	10.00	16.20	3.70	5.50	PU	WPH-2649
W130106601	10.00	16.50	4.00	6.00	FKM	WPS-3394
W130101112	10.00	17.00	4.00	6.50	NBR	WPS-6390
W13010111	10.00	17.00	5.00	7.00	NBR	WPS-6281
W130101102	10.00	18.00	5.00	7.00	NBR	WPS-2439
W13010L512	10.00	18.20	4.50	6.00	PU	WPH-1627
W130106602	10.00	20.00	5.00	6.50	FKM	WPS-5828
W13010L502	10.00	20.00	8.50	9.50	PU	WPH-714
W13010L514	10.00	23.00	8.00	11.00	PU	WPH-1725
W130104501	10.00	23.00	8.00	11.00	VMQ	WPS-7494
W130106501	10.80	20.70	6.80	9.00	FKM	WPS-5352
W130111001	11.50	16.50	3.30	5.00	NBR	WPS-6208
W130110901	11.51	16.27	3.90	5.00	NBR	WPS-5080
W130116701	11.75	18.15	3.80	4.30	FKM	WPS-3285
W130121116	12.00	15.50	3.50	5.50	NBR	WPS-4925
W13012L507	12.00	16.00	2.60	4.00	PU	WPH-1766
W130121131	12.00	16.00	3.00	4.00	NBR	WPS-7019
W130126707	12.00	16.00	3.20	3.80	FKM	WPS-5335
W130121127	12.00	16.00	3.20	4.80	NBR	WPS-5429
W130121123	12.00	16.00	3.40	4.50	NBR	WPS-5941
W130120801	12.00	16.00	3.50	5.00	NBR	WPS-2465
W130126706	12.00	16.50	3.00	4.00	FKM	WPS-4847
W13012L514	**12.00**	**16.50**	**3.30**	**4.00**	**PU**	**WPH-2337**
W13012L508	12.00	17.00	1.50	5.00	PU	WPH-1848
W130121112	12.00	17.00	3.00	4.00	NBR	WPS-4060
W130128903	12.00	17.00	3.20	4.00	PU	WPH-2615
W13012L504	12.00	17.00	3.50	4.00	PU	WPH-1517
W130121121	12.00	17.00	3.50	4.00	NBR	WPS-5559
W130121128	12.00	17.00	3.50	5.00	NBR	WPS-6614
W130128901	12.00	17.00	3.50	5.00	PU	WPH-2089
W13012L513	12.00	17.00	3.80	5.00	PU	WPH-2197
W130121115	12.00	17.00	3.80	5.00	NBR	WPS-4765
W130121124	12.00	17.00	3.80	5.30	NBR	WPS-6154
W130121125	12.00	17.00	4.00	6.50	NBR	WPS-6389

Bold sizes are readily available in stock.
Other materials are available on request.

W13

Heavy Duty Wiper Seal

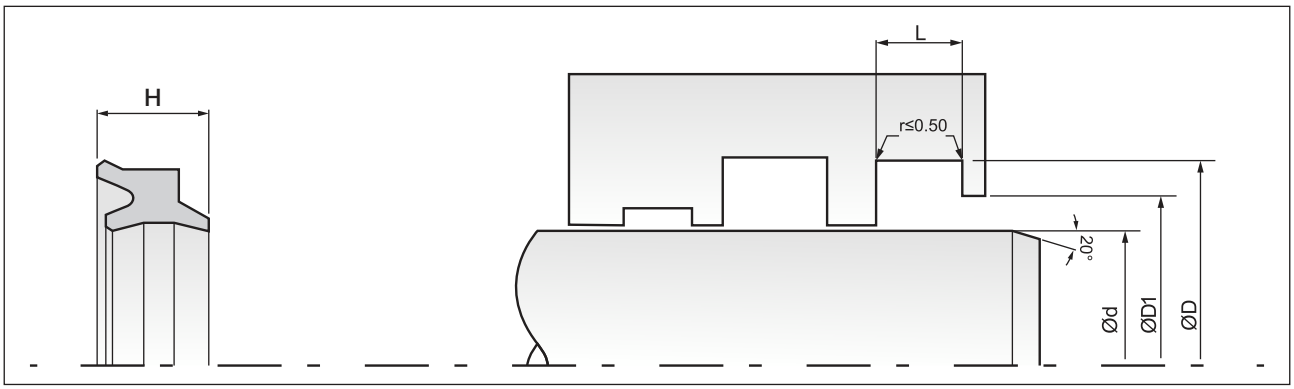

Part No.	d (f8)	D (H9)	L (+0.2)	H	Matl.	Mould No.
W130121117	12.00	17.00	4.20	6.20	NBR	WPS-4995
W130121113	12.00	17.00	4.50	5.50	NBR	WPS-4091
W130126702	12.00	18.00	3.60	4.80	FKM	WPS-3335
W130126705	12.00	18.00	3.60	4.80	FKM	WPS-3636
W130125901	12.00	18.00	3.60	4.80	PU	WPH-363
W130121132	12.00	18.00	3.60	5.00	NBR	WPS-7314
W13012L517	12.00	18.00	3.70	5.50	PU	WPH-2650
W13012L503	12.00	18.00	3.80	6.00	PU	WPH-1467
W130121101	12.00	18.00	4.00	4.80	NBR	WPS-4358
W13012L509	12.00	18.00	4.00	5.00	PU	WPH-1850
W130126501	12.00	18.00	4.00	5.20	FKM	WPS-6557
W130126704	12.00	18.00	4.00	6.00	FKM	WPS-2870
W13012L502	12.00	18.00	4.50	7.00	PU	WPH-1560
W13012L502	**12.00**	**18.00**	**4.50**	**7.00**	**PU**	**WPH-666**
W130126709	12.00	18.00	7.00	9.00	FKM	WPS-6362
W130121114	12.00	18.60	3.50	5.50	NBR	WPS-4226
W13012L518	12.00	18.60	3.80	6.00	PU	WPH-2814
W130121110	12.00	19.00	5.20	7.50	NBR	WPS-4037
W13012L506	12.00	19.50	3.00	5.00	PU	WPH-1597
W130128902	12.00	19.50	3.10	4.20	PU	WPH-2617
W130121106	12.00	20.00	4.60	6.30	NBR	WPS-3129
W130121109	12.00	20.00	5.00	7.00	NBR	WPS-3576
W130126708	12.00	20.00	5.00	7.00	FKM	WPS-5437
W130121103	12.00	20.00	7.10	12.00	NBR	WPS-6474
W130121122	12.00	22.00	4.60	6.70	NBR	WPS-5607
W130126710	12.00	22.00	4.80	6.30	FKM	WPS-6404
W13012L512	12.00	22.00	6.00	9.00	PU	WPH-2155
W130126701	12.00	22.00	7.00	9.50	FKM	WPS-2732
W13012L511	12.00	24.00	6.50	8.30	PU	WPH-2115
W130121107	12.50	24.50	7.00	10.00	NBR	WPS-3332
W130121111	12.70	20.50	4.50	6.00	NBR	WPS-4050
W130121130	12.80	18.80	2.70	4.00	NBR	WPS-6833
W13013Q201	13.00	20.00	4.45	5.71	PU	WPH-2738
W130131101	13.00	20.00	5.00	6.50	NBR	WPS-2571
W130131102	13.09	19.44	5.30	7.00	NBR	WPS-5128
W130130802	13.49	21.43	4.90	6.60	NBR	WPS-3867
W130131103	13.50	20.50	5.00	6.50	NBR	WPS-5161
W13013L502	13.50	20.50	5.00	6.50	PU	WPH-1566
W130141109	14.00	18.00	3.00	4.00	NBR	WPS-5994
W130141110	14.00	18.00	3.50	4.80	NBR	WPS-6234
W130141112	14.00	20.00	3.20	4.80	NBR	WPS-6938
W130141108	14.00	20.00	3.30	4.80	NBR	WPS-5562
W13014L506	14.00	20.00	3.60	4.80	PU	WPH-2362
W13014T801	14.00	20.00	3.60	4.80	FKM	WPS-6660
W13020U301	14.00	20.00	3.60	4.80	FKM	WPS-7315
W130146702	14.00	20.00	3.70	6.00	FKM	WPS-2871
W130141107	14.00	20.00	3.80	6.00	NBR	WPS-4430
W130146703	14.00	20.00	4.00	4.80	FKM	WPS-6350
W13014L502	14.00	20.00	4.00	4.80	PU	WPH-1550
W13014L402	14.00	20.00	4.00	5.00	PU	WPH-1578
W13014L504	14.00	20.00	4.00	5.50	PU	WPH-1710
W13014L507	14.00	20.00	4.00	6.00	PU	WPH-2736

Part No.	d (f8)	D (H9)	L (+0.2)	H	Matl.	Mould No.
W130141106	14.00	20.00	4.50	6.00	NBR	WPS-4334
W130141111	14.00	20.00	4.50	6.30	NBR	WPS-6433
W130141105	14.00	20.00	5.00	7.00	NBR	WPS-4263
W13014L501	14.00	22.00	4.50	6.00	PU	WPH-1176
W130141102	14.00	22.00	4.50	6.00	NBR	WPS-2562
W13014L505	14.00	22.00	5.00	6.00	PU	WPH-2311
W130141104	14.00	22.00	5.00	7.00	NBR	WPS-2702
W130141103	14.00	24.00	5.00	7.00	NBR	WPS-2494
W130151108	15.00	20.00	3.50	4.50	NBR	WPS-7001
W13015L505	15.00	21.00	3.00	4.00	PU	WPH-1812
W130151109	15.00	21.00	4.00	5.00	NBR	WPS-7384
W130151104	15.00	21.00	4.30	5.20	NBR	WPS-3200
W130151102	15.00	21.00	4.60	5.50	NBR	WPS-2991
W130151105	15.00	21.00	4.70	5.38	NBR	WPS-4000
W130151103	15.00	21.00	5.00	6.00	NBR	WPS-3080
W13015L503	15.00	24.00	5.00	7.00	PU	WPH-1591
W130151106	15.00	25.40	4.00	7.00	NBR	WPS-4781
W130154501	15.00	28.00	4.00	5.50	VMQ	WPS-7493
W13015L504	15.00	28.00	4.00	5.50	PU	WPH-1724
W13015L507	15.36	26.40	5.08	6.85	PU	WPH-2378
W13015L509	15.50	21.00	3.30	4.00	PU	WPH-2747
W130156701	15.87	23.40	4.70	6.30	FKM	WPS-3985
W13015R301	15.87	23.54	5.00	7.00	PU	WPH-1669
W13015L502	15.87	25.40	4.80	6.40	PU	WPH-807
W13015L501	15.87	25.40	5.15	6.95	PU	WPH-617
W13016L513	**16.00**	**20.00**	**3.00**	**4.00**	**PU**	**WPH-1606**
W130161113	16.00	20.00	3.00	4.00	NBR	WPS-5374
W13016L519	16.00	20.00	3.70	5.50	PU	WPH-2227
W13016L503	16.00	20.50	3.20	4.00	PU	WPH-894
W130165909	16.00	20.50	3.20	4.00	PU	WPH-2685
W13020T901	16.00	20.50	3.20	4.00	FKM	WPS-7167
W13016L516	16.00	20.50	3.35	4.25	PU	WPH-1762
W13016L527	16.00	20.50	3.70	4.00	PU	WPH-2651
W13016L530	16.00	20.50	3.70	4.30	PU	WPH-2739
W13016L403	16.00	20.50	3.70	4.30	PU	WPH-1318
W13016L511	16.00	21.00	3.00	4.50	PU	WPH-1545
W13016L404	16.00	21.00	3.30	4.30	PU	WPH-1709
W130161110	16.00	22.00	3.00	4.00	NBR	WPS-6026
W13016L515	16.00	22.00	3.00	4.00	PU	WPH-1611
W13016L503	16.00	22.00	3.00	6.00	PU	WPH-1130
W130168905	16.00	22.00	3.30	4.00	PU	WPH-2616
W130165901	16.00	22.00	3.50	4.80	PU	WPH-369
W13016L507	16.00	22.00	3.50	4.80	PU	WPH-1906
W130161115	16.00	22.00	3.50	5.50	NBR	WPS-6076
W130166705	16.00	22.00	3.80	6.00	FKM	WPS-833
W13016L529	16.00	22.00	4.00	4.80	PU	WPH-2694
W130161101	16.00	22.00	4.00	4.80	NBR	WPS-4357
W130166702	16.00	22.00	4.00	4.80	FKM	WPS-3474
W130165906	16.00	22.00	4.50	6.00	PU	WPH-708
W130161114	16.00	22.00	4.50	6.50	NBR	WPS-5786
W13016L512	16.00	22.00	5.00	7.50	PU	WPH-1565
W130161112	16.00	22.00	6.00	7.00	NBR	WPS-5160

Bold sizes are readily available in stock.
Other materials are available on request.

W13

Heavy Duty Wiper Seal

MAX SPARE LIMITED
QUALITY. PRECISION. SPEED.

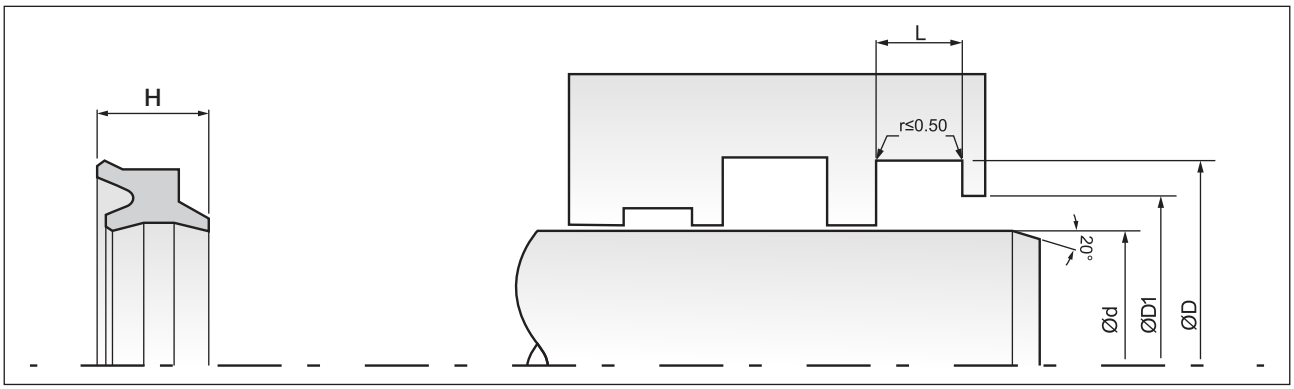

Part No.	d (f8)	D (H9)	L (+0.2)	H	Matl.	Mould No.
W130168904	16.00	22.00	6.80	8.50	PU	WPH-2340
W130166708	16.00	22.00	7.00	9.00	FKM	WPS-5966
W13016L523	16.00	23.00	3.00	5.00	PU	WPH-2388
W130161121	16.00	23.00	3.50	5.00	NBR	WPS-6628
W130166709	16.00	23.00	3.70	6.00	FKM	WPS-6049
W13016L522	16.00	23.00	3.80	6.20	PU	WPH-2329
W13016L528	16.00	23.00	4.20	6.00	PU	WPH-2652
W130161125	16.00	23.00	4.70	6.00	NBR	WPS-7158
W13016L510	16.00	23.00	5.00	6.50	PU	WPH-1300
W130161120	16.00	23.00	7.30	10.00	NBR	WPS-6510
W130160801	16.00	24.00	4.50	6.00	NBR	WPS-6470
W13016L501	**16.00**	**24.00**	**4.50**	**6.00**	**PU**	**WPH-373**
W130166703	16.00	24.00	4.50	6.00	FKM	WPS-5306
W130161109	16.00	24.00	4.50	6.50	NBR	WPS-4915
W130166704	16.00	24.00	4.50	7.00	FKM	WPS-2974
W130165907	16.00	24.00	4.60	6.00	PU	WPH-1366
W130161123	16.00	24.00	4.70	6.50	NBR	WPS-6995
W130161122	16.00	24.00	5.00	6.50	NBR	WPS-6786
W130168902	16.00	24.00	5.00	7.00	PU	WPH-2265
W130161104	16.00	24.00	5.00	7.00	NBR	WPS-1477
W130161001	16.00	24.00	5.50	7.20	NBR	WPS-4657
W130161118	16.00	24.00	5.50	7.30	NBR	WPS-6435
W130166706	16.00	24.00	5.50	7.50	FKM	WPS-5665
W130161124	16.00	24.00	5.50	7.50	NBR	WPS-7112
W13016L508	16.00	24.00	5.80	8.00	PU	WPH-1191
W130161108	16.00	24.00	6.00	8.00	NBR	WPS-4455
W13016L525	16.00	24.00	6.00	8.00	PU	WPH-2541
W130161108	16.00	24.00	6.00	8.00	NBR	WPS-2526
W130161111	16.00	24.00	6.00	9.00	NBR	WPS-5051
W130166707	16.00	26.00	5.00	6.20	FKM	WPS-5885
W130166712	16.00	26.00	5.00	6.30	FKM	WPS-6425
W13016L401	16.00	26.00	5.00	6.50	PU	WPH-978
W130161105	16.00	26.00	5.00	7.00	NBR	WPS-262
W13016L526	16.00	26.00	6.00	8.50	PU	WPH-2641
W13016L517	16.00	26.00	6.50	8.50	PU	WPH-2002
W130166701	16.00	26.00	7.00	9.50	FKM	WPS-2733
W130166710	16.50	21.00	3.20	3.80	FKM	WPS-6057
W130171101	17.00	22.00	3.50	2.50	NBR	WPS-4675
W13018L507	18.00	23.00	3.50	4.50	PU	WPH-1905
W13018L505	18.00	24.00	3.30	4.80	PU	WPH-1151
W130186704	18.00	24.00	3.60	4.80	FKM	WPS-2699
W13018L509	18.00	24.00	3.60	4.80	PU	WPH-2238
W13018L506	18.00	24.00	3.70	6.00	PU	WPH-1193
W130186703	18.00	24.00	3.80	6.00	FKM	WPS-2700
W130186706	18.00	24.00	3.80	7.00	FKM	WPS-4377
W130186707	18.00	24.00	4.00	4.80	FKM	WPS-5372
W130181108	18.00	24.60	3.50	6.00	NBR	WPS-4548
W130181106	18.00	25.00	3.00	5.00	NBR	WPS-2538
W130181105	18.00	25.00	4.50	6.00	NBR	WPS-2431
W13018L501	**18.00**	**26.00**	**4.50**	**6.00**	**PU**	**WPH-309**
W130181102	18.00	26.00	4.50	6.00	NBR	WPS-1260
W13018L501	18.00	26.00	4.50	6.00	PU	WPH-1600

Part No.	d (f8)	D (H9)	L (+0.2)	H	Matl.	Mould No.
W130181110	18.00	26.00	5.00	7.00	NBR	WPS-5546
W13018L503	**18.00**	**26.00**	**5.00**	**7.00**	**PU**	**WPH-932**
W130181109	18.00	28.00	4.50	7.00	NBR	WPS-4552
W13018L504	18.00	28.00	5.00	7.00	PU	WPH-1119
W130186601	18.00	28.00	5.50	7.00	FKM	WPS-7236
W13018L502	18.00	28.25	7.00	9.00	PU	WPH-836
W130181107	18.00	30.00	7.00	10.00	NBR	WPS-3223
W130181111	18.50	27.00	3.50	4.50	NBR	WPS-6980
W13019L401	19.00	26.00	3.50	5.20	PU	WPH-821
W13019L401	19.00	26.00	3.50	5.20	PU	WPH-1462
W130191102	19.00	27.60	4.70	6.00	NBR	WPS-3783
W130196701	19.00	28.00	5.00	6.30	FKM	WPS-6748
W130191101	19.05	27.00	4.50	5.90	NBR	WPS-3563
W130191103	19.05	27.00	4.93	5.90	NBR	WPS-6242
W13019L501	19.05	28.57	4.90	6.50	PU	WPH-805
W13019L502	19.05	31.75	6.00	8.00	PU	WPH-1082
W130190801	19.30	32.00	6.30	9.30	NBR	WPS-5623
W130195901	19.50	25.00	3.50	5.00	PU	WPH-2359
W130191107	19.50	26.50	3.50	4.50	NBR	WPS-6685
W130208902	20.00	25.00	3.40	4.80	PU	WPH-2258
W130205904	20.00	25.00	3.50	4.50	PU	WPH-1215
W130201128	20.00	25.00	3.50	5.00	NBR	WPS-6726
W130206707	20.00	25.00	3.60	4.60	FKM	WPS-3468
W130206401	20.00	25.00	3.60	4.60	FKM	WPS-3967
W130201130	20.00	25.00	3.60	4.60	NBR	WPS-7408
W13020L519	20.00	25.00	3.60	4.80	PU	WPH-2749
W130205906	20.00	25.00	3.60	4.80	PU	WPH-2124
W130205903	20.00	25.00	3.80	6.00	PU	WPH-2309
W130201109	20.00	25.00	4.00	4.60	NBR	WPS-4808
W130206711	20.00	25.00	4.00	5.00	FKM	WPS-5113
W13020L404	20.00	25.00	4.50	6.00	PU	WPH-2242
W130201123	20.00	25.00	4.50	6.00	NBR	WPS-5602
W130206703	20.00	25.40	3.80	4.80	FKM	WPS-2171
W13020L511	20.00	25.40	4.00	6.00	PU	WPH-2080
W13020L518	20.00	25.50	3.70	4.80	PU	WPH-2730
W130206708	20.00	26.00	3.40	6.00	FKM	WPS-3485
W13020L514	20.00	26.00	3.50	4.50	PU	WPH-2429
W13020L501	20.00	26.00	3.50	4.80	PU	WPH-368
W13020L507	20.00	26.00	4.00	4.80	PU	WPH-1633
W130201002	20.00	26.00	4.00	5.00	NBR	WPS-6749
W130205905	20.00	26.00	4.00	6.00	PU	WPH-1314
W13020L516	20.00	26.00	4.00	6.00	PU	WPH-2550
W13020L504	20.00	26.00	4.00	7.00	PU	WPH-1286
W130201120	20.00	26.00	5.00	7.00	NBR	WPS-5091
W130201127	20.00	27.00	4.00	5.00	NBR	WPS-6556
W13020L510	20.00	27.00	5.50	7.50	PU	WPH-1760
W130201113	20.00	27.00	5.70	7.50	NBR	WPS-4404
W13020L502	20.00	28.00	3.70	5.00	PU	WPH-858
W130201101	20.00	28.00	4.50	6.00	NBR	WPS-1111
W13020L505	**20.00**	**28.00**	**4.50**	**6.00**	**PU**	**WPH-239**
W13020L517	20.00	28.00	4.50	6.00	PU	WPH-2548
W130201116	20.00	28.00	4.50	7.00	NBR	WPS-4587

Bold sizes are readily available in stock.
Other materials are available on request.

MAX SPARE LIMITED
QUALITY. PRECISION. SPEED.

W13

Heavy Duty Wiper Seal

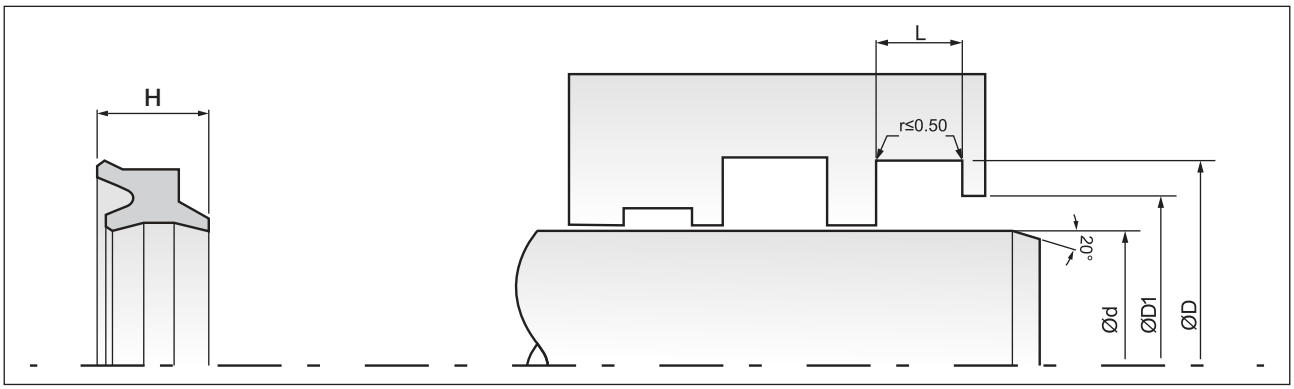

Part No.	d (f8)	D (H9)	L (+0.2)	H	Matl.	Mould No.
W130206706	20.00	28.00	5.00	6.50	FKM	WPS-3170
W130201121	20.00	28.00	5.00	6.50	NBR	WPS-5281
W13020L503	**20.00**	**28.00**	**5.00**	**7.00**	**PU**	**WPH-991**
W130206714	20.00	28.00	5.00	7.00	FKM	WPS-6027
W130201114	20.00	28.00	5.00	7.00	NBR	WPS-4516
W1302011229	20.00	28.00	5.00	7.00	NBR	WPS-6737
W130201103	20.00	28.00	5.00	7.50	NBR	WPS-4545
W130206713	20.00	28.00	5.50	7.00	FKM	WPS-5386
W13020L402	20.00	28.00	5.50	7.00	PU	WPH-1579
W13020L508	20.00	28.00	5.50	7.30	PU	WPH-1683
W130204601	20.00	28.00	5.50	7.30	VMQ	WPS-5083
W130201126	20.00	28.00	5.50	7.40	NBR	WPS-6434
W130201111	20.00	28.00	5.50	7.50	NBR	WPS-4397
W130206709	20.00	28.00	5.50	7.50	FKM	WPS-3368
W130201122	20.00	28.00	5.50	7.50	NBR	WPS-5428
W130206603	20.00	28.00	5.50	8.00	FKM	WPS-4026
W130201119	20.00	28.00	5.50	8.00	NBR	WPS-4940
W130201117	20.00	28.00	6.00	8.00	NBR	WPS-4633
W130206501	20.00	28.00	6.11	8.96	FKM	WPS-3935
W130208901	20.00	28.00	6.50	9.00	PU	WPH-2090
W130201110	20.00	28.00	7.00	9.00	NBR	WPS-3766
W130206705	20.00	28.60	4.00	6.00	FKM	WPS-2793
W130201107	20.00	28.60	4.00	6.00	NBR	WPS-2630
W130201106	20.00	29.00	4.00	6.00	NBR	WPS-2590
W130201115	20.00	30.00	4.50	7.00	NBR	WPS-4553
W130205907	20.00	30.00	4.80	6.30	PU	WPH-2708
W13020L520	20.00	30.00	4.80	6.30	PU	WPH-2753
W130201105	20.00	30.00	4.80	7.50	NBR	WPS-2261
W130205908	20.00	30.00	5.40	8.00	PU	WPH-2883
W130201104	20.00	30.00	6.00	7.50	NBR	WPS-2565
W13020L401	20.00	30.00	6.00	7.50	PU	WPH-1216
W130206502	20.00	30.00	6.00	7.50	FKM	WPS-4745
W130206605	20.00	30.00	6.00	8.00	FKM	WPS-6854
W130201108	20.00	30.00	7.00	9.00	NBR	WPS-3322
W130206601	20.00	30.00	7.00	9.00	FKM	WPS-2749
W13020L509	20.00	35.00	11.00	15.00	PU	WPH-1727
W13021L401	21.00	35.00	5.30	6.50	PU	WPH-1698
W130228901	22.00	27.50	3.80	5.50	PU	WPH-2543
W13022L501	22.00	28.00	3.50	4.80	PU	WPH-494
W130226704	22.00	28.00	3.50	6.00	FKM	WPS-4148
W130226702	22.00	28.00	3.60	4.80	FKM	WPS-3154
W130226702	22.00	28.00	3.60	4.80	FKM	WPS-4436
W13022L510	22.00	28.00	4.00	5.00	PU	WPH-2603
W130226701	22.00	28.00	4.00	6.00	FKM	WPS-2872
W13022L506	22.00	28.00	4.00	7.00	PU	WPH-1764
W130220801	22.00	28.00	4.50	6.00	NBR	WPS-7365
W130221150	22.00	28.00	5.20	7.00	NBR	WPS-5596
W130226705	22.00	28.00	5.20	7.00	FKM	WPS-4946
W130221107	22.00	28.00	5.50	6.80	NBR	WPS-2548
W130221149	22.00	28.50	5.50	7.00	NBR	WPS-5164
W130221105	22.00	30.00	4.50	6.00	NBR	WPS-2438
W130226703	22.00	30.00	4.50	6.00	FKM	WPS-3537

Part No.	d (f8)	D (H9)	L (+0.2)	H	Matl.	Mould No.
W13022L504	22.00	30.00	5.00	7.00	PU	WPH-1217
W130221146	22.00	30.60	5.00	7.00	NBR	WPS-4052
W13022L507	22.00	32.00	4.00	7.00	PU	WPH-2102
W130221106	22.00	32.00	5.00	7.00	NBR	WPS-2540
W130221110	22.00	32.00	6.40	8.70	NBR	WPS-5580
W130226708	22.00	32.00	7.00	7.50	FKM	WPS-5320
W130221108	22.00	32.00	7.50	9.50	NBR	WPS-3244
W130221101	22.00	32.00	7.50	9.50	NBR	WPS-6290
W13022L505	22.00	32.50	5.00	9.00	PU	WPH-1557
W130221109	22.00	32.50	6.20	7.00	NBR	WPS-3399
W13022C301	22.22	31.75	5.38	6.98	XNBR	WPS-7296
W130226707	22.22	31.75	5.38	7.13	FKM	WPS-5227
W13022L509	22.40	28.00	4.00	5.00	PU	WPH-2418
W13022L508	22.40	28.00	5.00	7.00	PU	WPH-2117
W130226710	22.40	30.00	4.50	6.00	FKM	WPS-3947
W130221144	22.40	30.00	5.00	7.00	NBR	WPS-3204
W13022L503	**22.40**	**30.40**	**4.50**	**6.00**	**PU**	**WPH-948**
W130226709	22.40	30.40	4.50	6.00	FKM	WPS-5820
W130221147	22.40	30.40	4.50	6.00	NBR	WPS-4676
W130221152	22.40	32.40	4.50	6.00	NBR	WPS-6711
W13023L401	23.00	35.00	5.30	6.50	PU	WPH-1638
W130245901	24.00	29.50	3.80	5.30	PU	WPH-1810
W130241101	24.00	31.50	5.50	6.90	NBR	WPS-5427
W130245902	24.00	35.00	5.30	6.50	PU	WPH-2709
W130246701	24.00	39.00	6.30	9.36	FKM	WPS-5521
W130241102	24.50	32.60	5.70	7.50	NBR	WPS-5519
W13025L520	25.00	30.00	3.50	4.40	PU	WPH-2088
W130256716	25.00	30.00	3.50	4.40	FKM	WPS-5334
W130256401	25.00	30.00	3.60	4.60	FKM	WPS-7483
W130251132	25.00	30.00	5.00	6.00	NBR	WPS-4673
W13025L522	25.00	30.00	5.00	6.50	PU	WPH-2139
W130251124	25.00	31.00	3.30	4.80	NBR	WPS-3812
W13025L518	25.00	31.00	3.50	4.80	PU	WPH-1979
W130256733	25.00	31.00	3.50	4.80	FKM	WPS-7329
W130251148	25.00	31.00	3.60	4.80	NBR	WPS-6671
W13025L507	25.00	31.00	3.60	4.80	PU	WPH-985
W13025L533	25.00	31.00	3.60	6.00	PU	WPH-2884
W130251150	25.00	31.00	4.00	6.00	NBR	WPS-6763
W13025L513	25.00	31.00	4.00	6.00	PU	WPH-1634
W13025L514	25.00	31.00	5.10	7.30	PU	WPH-1844
W13025L516	25.00	31.00	5.10	7.30	PU	WPH-2082
W130251117	25.00	32.00	3.50	5.00	NBR	WPS-2310
W13025L529	25.00	32.00	3.50	5.00	PU	WPH-2642
W130255902	25.00	32.00	4.00	5.00	PU	WPH-1459
W130256601	25.00	32.00	4.90	6.40	FKM	WPS-3744
W13025L505	25.00	32.00	5.00	7.00	PU	WPH-859
W130251112	25.00	32.00	5.20	7.20	NBR	WPS-7102
W130251001	25.00	32.00	5.20	7.20	NBR	WPS-4656
W130251127	25.00	32.00	5.50	7.50	NBR	WPS-4335
W130251147	25.00	32.00	6.80	9.00	NBR	WPS-6408
W130251123	25.00	32.00	7.50	10.00	NBR	WPS-3772
W13025L532	25.00	33.00	3.70	7.00	PU	WPH-2875

Bold sizes are readily available in stock.
Other materials are available on request.

W13

Heavy Duty Wiper Seal

MAX SPARE LIMITED
QUALITY. PRECISION. SPEED.

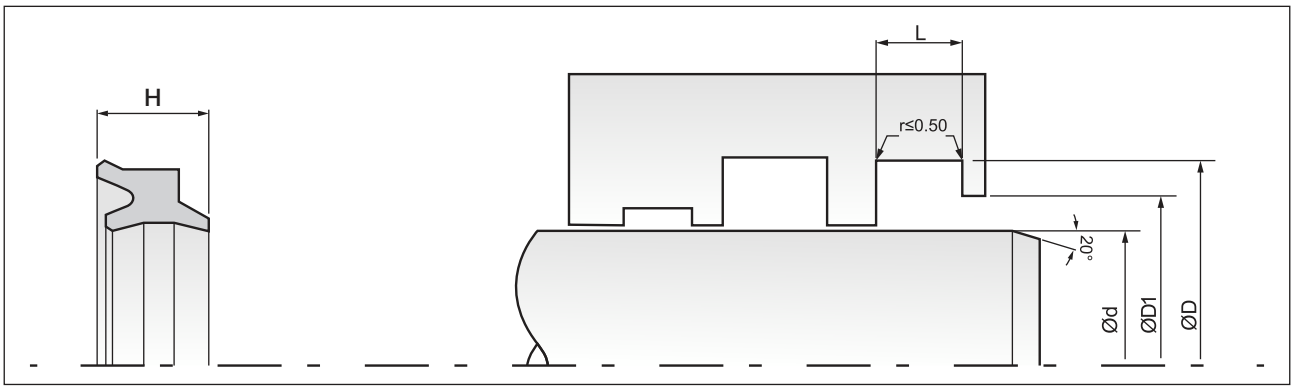

Part No.	d (f8)	D (H9)	L (+0.2)	H	Matl.	Mould No.
W13025L515	25.00	33.00	4.00	6.00	PU	WPH-1861
W130251103	25.00	33.00	4.00	6.00	NBR	WPS-1198
W130256709	25.00	33.00	4.00	6.00	FKM	WPS-5150
W130251151	25.00	33.00	4.00	7.00	NBR	WPS-6794
W13025L510	25.00	33.00	4.20	6.00	PU	WPH-1236
W130251101	25.00	33.00	4.50	5.90	NBR	WPS-6047
W13025L503	**25.00**	**33.00**	**4.50**	**6.00**	**PU**	**WPH-285**
W13025L527	25.00	33.00	4.50	6.00	PU	WPH-2557
W13025L527	25.00	33.00	4.50	6.00	PU	WPH-2547
W130256726	25.00	33.00	4.50	6.00	FKM	WPS-6512
W130255905	25.00	33.00	4.50	6.00	PU	WPH-2700
W130251115	25.00	33.00	4.50	6.20	NBR	WPS-3929
W13025L519	25.00	33.00	4.80	7.00	PU	WPH-2003
W130256710	25.00	33.00	5.00	6.00	FKM	WPS-5211
W13025L509	25.00	33.00	5.00	6.00	PU	WPH-1137
W130251106	25.00	33.00	5.00	6.00	NBR	WPS-7032
W130251128	25.00	33.00	5.00	6.50	NBR	WPS-4380
W130256728	25.00	33.00	5.00	6.50	FKM	WPS-6654
W130251135	25.00	33.00	5.00	6.50	NBR	WPS-5287
W130256712	25.00	33.00	5.00	7.00	FKM	WPS-5251
W13025L501	**25.00**	**33.00**	**5.00**	**7.00**	**PU**	**WPH-729**
W130251121	25.00	33.00	5.00	7.00	NBR	WPS-3184
W13025L512	25.00	33.00	5.50	7.30	PU	WPH-1567
W130256708	25.00	33.00	5.50	7.40	FKM	WPS-5145
W130251130	25.00	33.00	5.50	7.50	NBR	WPS-4496
W13025V301	25.00	33.00	5.50	8.00	NBR	WPS-3965
W130251126	25.00	33.00	6.00	8.00	NBR	WPS-4219
W130256704	25.00	33.00	7.25	9.50	FKM	WPS-4535
W130256722	25.00	33.00	7.50	9.50	FKM	WPS-5916
W130256702	25.00	33.00	7.50	10.00	FKM	WPS-2831
W130251152	25.00	33.00	8.00	10.00	NBR	WPS-6821
W13025L523	25.00	33.00	8.00	11.00	PU	WPH-2146
W130256718	25.00	34.00	5.50	8.00	NBR	WPS-5411
W130251141	25.00	34.00	6.80	8.80	NBR	WPS-5937
W130251143	25.00	34.00	7.30	10.00	NBR	WPS-6070
W130256727	25.00	34.50	5.50	7.00	FKM	WPS-6615
W13025L528	25.00	35.00	3.00	4.00	PU	WPH-2555
W130251155	25.00	35.00	5.00	6.00	NBR	WPS-7198
W13025L508	25.00	35.00	5.00	7.00	PU	WPH-357
W130251154	25.00	35.00	5.00	7.00	NBR	WPS-7175
W130251144	25.00	35.00	5.00	7.50	NBR	WPS-6169
W130251120	25.00	35.00	5.30	6.50	NBR	WPS-2959
W130251157	25.00	35.00	5.50	10.00	NBR	WPS-7387
W130256711	25.00	35.00	6.00	7.00	FKM	WPS-5230
W130251110	25.00	35.00	6.00	8.00	NBR	WPS-583
W13025L502	25.00	35.00	6.20	7.60	PU	WPH-737
W13025L524	25.00	35.00	6.30	7.60	PU	WPH-2181
W130251119	25.00	35.00	7.00	9.50	NBR	WPS-2798
W130256701	25.00	35.00	7.00	9.50	FKM	WPS-2734
W130256730	25.00	35.00	7.50	9.50	FKM	WPS-6926
W130256725	25.00	35.00	7.80	9.80	FKM	WPS-6174
W130251006	25.00	35.00	8.00	11.00	NBR	WPS-7440

Part No.	d (f8)	D (H9)	L (+0.2)	H	Matl.	Mould No.
W130256706	25.00	35.00	9.00	12.00	FKM	WPS-4835
W130251113	25.00	36.00	5.00	10.00	NBR	WPS-6149
W130251102	25.00	36.00	7.00	10.00	NBR	WPS-6412
W130251109	25.00	37.00	7.00	10.00	NBR	WPS-3945
W130256724	25.00	37.00	7.00	10.00	FKM	WPS-6090
W130251131	25.00	38.00	5.60	8.50	NBR	WPS-4665
W130251146	25.00	38.00	6.30	9.50	NBR	WPS-6287
W130250802	25.00	38.00	6.30	9.50	NBR	WPS-5624
W130256707	25.00	40.00	5.00	7.00	FKM	WPS-5058
W130251149	25.00	40.00	6.00	10.00	NBR	WPS-6757
W130256734	25.40	31.00	3.70	5.00	FKM	WPS-7381
W130256714	25.40	33.00	7.00	8.30	FKM	WPS-5319
W130252304	25.40	33.33	4.00	6.00	CR	WPS-5347
W130256703	25.40	33.33	5.00	6.00	FKM	WPS-4586
W130251153	25.40	33.33	8.30	12.00	NBR	WPS-7110
W130256732	25.40	34.40	5.50	7.50	FKM	WPS-7170
W130255904	25.40	34.63	5.38	6.98	PU	WPH-1873
W130256731	25.40	34.67	5.00	7.00	FKM	WPS-7042
W130256729	25.40	34.67	5.38	7.00	FKM	WPS-6736
W130253501	25.40	34.67	5.38	7.00	EPDM	WPS-6932
W130251122	25.40	34.80	5.20	7.00	NBR	WPS-3400
W130251145	25.40	34.80	5.20	7.00	NBR	WPS-6238
W130251002	25.40	34.92	5.00	6.60	NBR	WPS-4782
W130256719	25.40	34.92	5.30	6.80	FKM	WPS-5587
W13025L504	25.40	34.92	5.30	7.30	PU	WPH-806
W130256717	25.40	34.92	5.38	6.98	FKM	WPS-5384
W130255903	25.40	34.92	5.38	6.98	PU	WPH-1383
W130251142	25.40	34.92	5.38	7.00	NBR	WPS-6063
W13025L517	25.40	34.93	5.15	6.73	PU	WPH-1916
W130251116	25.40	35.00	5.30	7.00	NBR	WPS-1604
W130251138	25.40	35.50	5.30	7.50	NBR	WPS-5694
W130251118	25.40	36.51	4.75	9.52	NBR	WPS-2461
W130256705	25.40	38.00	7.00	12.00	FKM	WPS-4746
W130251111	25.40	38.10	7.00	10.00	NBR	WPS-6545
W130251133	25.40	38.50	7.00	10.00	NBR	WPS-4841
W130251004	25.50	38.00	7.00	10.00	NBR	WPS-5159
W130256721	25.50	42.50	8.00	9.50	FKM	WPS-5813
W13025L511	25.60	35.70	6.00	8.00	PU	WPH-1521
W130261101	26.00	37.00	7.00	10.00	NBR	WPS-3268
W130271101	27.00	36.00	5.00	7.00	NBR	WPS-6319
W130281107	28.00	35.00	4.50	6.00	NBR	WPS-2817
W13028L501	**28.00**	**35.00**	**4.50**	**6.00**	**PU**	**WPH-618**
W13028L511	28.00	35.00	4.50	6.00	PU	WPH-2546
W13028L509	28.00	35.00	5.00	7.00	PU	WPH-1771
W13028L508	28.00	35.00	6.00	9.00	PU	WPH-1769
W130286704	28.00	35.00	6.00	9.00	FKM	WPS-3249
W130281109	28.00	36.00	4.00	5.00	NBR	WPS-4533
W130281110	28.00	36.00	4.00	6.00	NBR	WPS-6616
W130286706	28.00	36.00	4.50	5.80	FKM	WPS-3274
W130286708	28.00	36.00	4.50	6.00	FKM	WPS-4345
W130281104	28.00	36.00	4.50	6.00	NBR	WPS-921
W13028L507	28.00	36.00	4.50	6.00	PU	WPH-1639

Bold sizes are readily available in stock.
Other materials are available on request.

MAX SPARE LIMITED
QUALITY. PRECISION. SPEED.

W13

Heavy Duty Wiper Seal

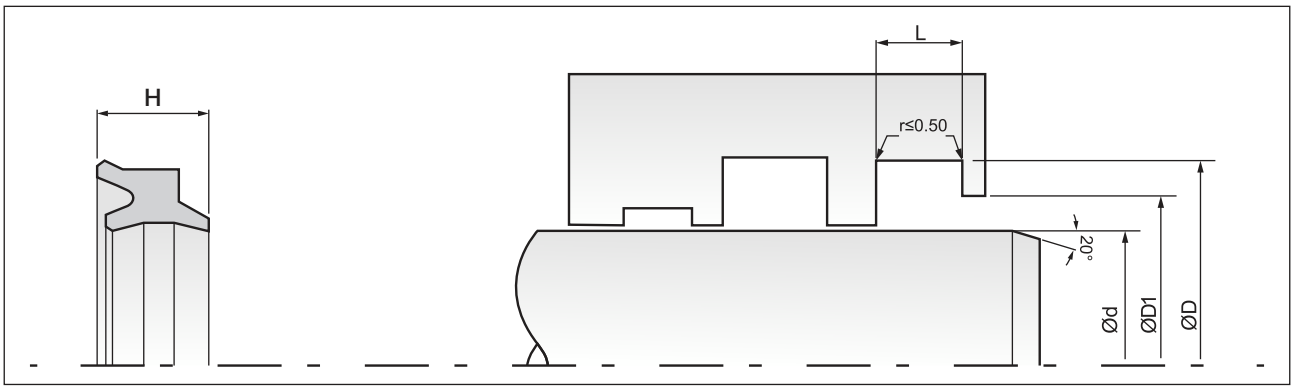

Part No.	d (f8)	D (H9)	L (+0.2)	H	Matl.	Mould No.
W13028L502	**28.00**	**36.00**	**4.50**	**6.00**	**PU**	**WPH-180**
W130286703	28.00	36.00	4.50	6.00	FKM	WPS-1680
W13028L513	28.00	36.00	4.50	6.00	PU	WPH-2558
W13028L512	28.00	36.00	4.50	6.00	PU	WPH-2545
W130286702	28.00	36.00	4.60	7.50	FKM	WPS-2788
W13028L510	28.00	36.00	4.80	7.00	PU	WPH-2004
W130286710	28.00	36.00	5.00	5.80	FKM	WPS-5129
W13028L506	28.00	36.00	5.00	6.50	PU	WPH-1573
W13028L503	**28.00**	**36.00**	**5.00**	**7.00**	**PU**	**WPH-754**
W130286601	28.00	36.00	5.00	7.00	FKM	WPS-2037
W130281111	28.00	36.00	5.00	7.00	NBR	WPS-7197
W130286705	28.00	36.00	5.00	7.50	FKM	WPS-2873
W130285901	28.00	36.00	5.65	6.30	PU	WPH-1188
W130286711	28.00	36.00	6.00	8.00	FKM	WPS-7388
W13028L504	28.00	36.50	4.50	6.00	PU	WPH-1220
W130281108	28.00	36.60	5.00	7.00	NBR	WPS-3813
W130286709	28.00	37.00	4.40	7.00	FKM	WPS-4965
W130281103	28.00	38.00	5.00	7.00	NBR	WPS-1184
W130286712	28.00	38.00	7.00	7.50	FKM	WPS-7430
W13028L514	28.50	38.00	4.50	5.80	PU	WPH-2800
W130296701	29.00	38.00	5.00	9.00	FKM	WPS-4714
W13030L502	30.00	37.00	5.00	6.50	PU	WPH-767
W130301113	30.00	37.50	5.00	7.00	NBR	WPS-3069
W13030L512	30.00	38.00	4.00	7.00	PU	WPH-2585
W13030L511	30.00	38.00	4.50	5.80	PU	WPH-2306
W13030L503	30.00	38.00	5.00	6.00	PU	WPH-871
W130308701	30.00	38.00	5.00	6.50	PU	WPH-290
W130301105	30.00	38.00	5.00	6.50	NBR	WPS-1612
W130306702	30.00	38.00	5.00	6.50	FKM	WPS-4107
W13030L501	**30.00**	**38.00**	**5.00**	**6.50**	**PU**	**WPH-2533**
W130301107	30.00	38.00	5.00	7.00	NBR	WPS-2212
W130306703	30.00	38.00	5.00	8.00	FKM	WPS-4329
W130306706	30.00	38.00	5.30	7.00	FKM	WPS-7069
W13030L513	30.00	38.00	6.00	7.00	PU	WPH-2851
W130306704	30.00	38.00	6.00	8.00	FKM	WPS-4881
W130301118	30.00	38.00	9.00	11.50	NBR	WPS-5687
W13030L508	30.00	39.00	5.00	6.50	PU	WPH-1908
W130301119	30.00	39.00	6.50	9.00	NBR	WPS-6122
W13030L510	30.00	40.00	4.50	6.00	PU	WPH-2103
W13030L506	30.00	40.00	5.00	6.50	PU	WPH-1526
W13030L509	30.00	40.00	5.00	6.50	PU	WPH-2054
W130306701	30.00	40.00	5.00	7.00	FKM	WPS-3662
W130301110	30.00	40.00	5.60	7.50	NBR	WPS-5301
W13030R301	30.00	40.00	6.00	7.00	PU	WPH-1254
W13030L504	30.00	40.00	6.00	7.50	PU	WPH-1386
W130301108	30.00	40.00	6.00	8.00	NBR	WPS-6788
W130301121	30.00	40.00	6.50	8.00	NBR	WPS-6505
W130301115	30.00	40.00	6.50	8.50	NBR	WPS-1598
W130301001	30.00	40.00	6.50	9.00	NBR	WPS-3861
W13030CF01	30.00	40.00	6.50		PU	WPH-2803
W130306705	30.00	40.00	8.00	10.00	FKM	WPS-6300
W130301116	30.00	41.00	6.00	7.70	NBR	WPS-4412

Part No.	d (f8)	D (H9)	L (+0.2)	H	Matl.	Mould No.
W130301112	30.00	42.00	5.00	9.00	NBR	WPS-2819
W130301117	30.00	42.00	7.00	10.00	NBR	WPS-4780
W13030L507	30.00	45.00	13.00	17.00	PU	WPH-1717
W13031L506	31.00	39.00	5.00	7.00	PU	WPH-1562
W13031L504	31.50	39.00	5.00	6.50	PU	WPH-1206
W13031L501	**31.50**	**39.50**	**5.00**	**6.50**	**PU**	**WPH-665**
W130316701	31.50	39.50	5.00	6.50	FKM	WPS-1261
W13031L501	31.50	39.50	5.00	6.50	PU	WPH-1763
W130311103	31.50	39.50	5.00	6.50	NBR	WPS-6336
W13031L507	31.50	39.50	5.00	6.50	PU	WPH-2544
W13031L508	31.50	39.50	5.00	7.00	PU	WPH-2848
W130311104	31.50	39.50	6.50	8.50	NBR	WPS-6785
W130316703	31.75	39.00	7.00	9.00	FKM	WPS-4689
W13031L502	31.75	41.27	5.30	7.30	PU	WPH-804
W13031O501	31.75	41.28	4.54	7.15	HYTREL	WPH-2843
W130316702	31.75	42.54	6.50	8.00	FKM	WPS-4162
W13031L401	31.75	42.80	7.00	8.50	PU	WPH-1067
W130311102	31.75	50.80	14.72	15.87	NBR	WPS-6145
W13032L508	32.00	38.00	3.50	4.80	PU	WPH-1978
W13032L516	32.00	40.00	3.70	7.00	PU	WPH-2874
W13032L509	32.00	40.00	4.00	7.00	PU	WPH-2101
W13032L505	**32.00**	**40.00**	**4.50**	**5.80**	**PU**	**WPH-1055**
W13032L505	32.00	40.00	4.50	5.80	PU	WPH-1862
W13032L513	32.00	40.00	4.50	5.80	PU	WPH-2549
W130328801	32.00	40.00	4.50	6.00	PU	WPH-967
W130326711	32.00	40.00	4.50	6.00	FKM	WPS-5965
W130321120	32.00	40.00	4.50	6.00	NBR	WPS-7033
W13032L507	32.00	40.00	4.70	6.50	PU	WPH-1520
W130321001	32.00	40.00	4.90	7.50	NBR	WPS-4557
W13032L506	32.00	40.00	5.00	5.80	PU	WPH-211
W130324501	32.00	40.00	5.00	5.80	VMQ	WPS-5244
W130326705	32.00	40.00	5.00	5.80	FKM	WPS-4694
W13032L501	32.00	40.00	5.00	6.50	PU	WPH-472
W13032L504	32.00	40.00	5.00	7.00	PU	WPH-933
W130326602	32.00	40.00	5.00	7.00	FKM	WPS-5922
W130321106	32.00	40.00	5.00	7.00	NBR	WPS-3555
W130321103	32.00	40.00	5.00	8.00	NBR	WPS-2574
W130326714	32.00	40.00	5.00	12.00	FKM	WPS-6216
W130321121	32.00	40.00	5.50	7.50	NBR	WPS-7111
W13032L514	32.00	40.00	6.00	8.00	PU	WPH-2665
W130326710	32.00	40.00	8.00	10.50	FKM	WPS-5954
W130321113	32.00	40.00	8.00	11.00	NBR	WPS-5848
W130321109	32.00	40.00	8.50	12.00	NBR	WPS-5101
W130326716	32.00	40.00	8.50	12.00	FKM	WPS-6929
W130321118	32.00	40.00	9.00	11.50	NBR	WPS-6559
W130321105	32.00	40.60	5.00	7.00	NBR	WPS-3562
W130326601	32.00	41.00	4.50	8.00	FKM	WPS-1745
W13032L503	32.00	41.00	4.50	8.00	PU	WPH-781
W130321102	32.00	41.00	4.50	8.00	NBR	WPS-2315
W130326715	32.00	41.00	5.00	7.00	FKM	WPS-6571
W130321107	32.00	41.00	6.50	8.80	NBR	WPS-4396
W130326704	32.00	41.25	5.00	8.50	FKM	WPS-4713

Bold sizes are readily available in stock.
Other materials are available on request.

W13

Heavy Duty Wiper Seal

MAX SPARE LIMITED
QUALITY. PRECISION. SPEED.

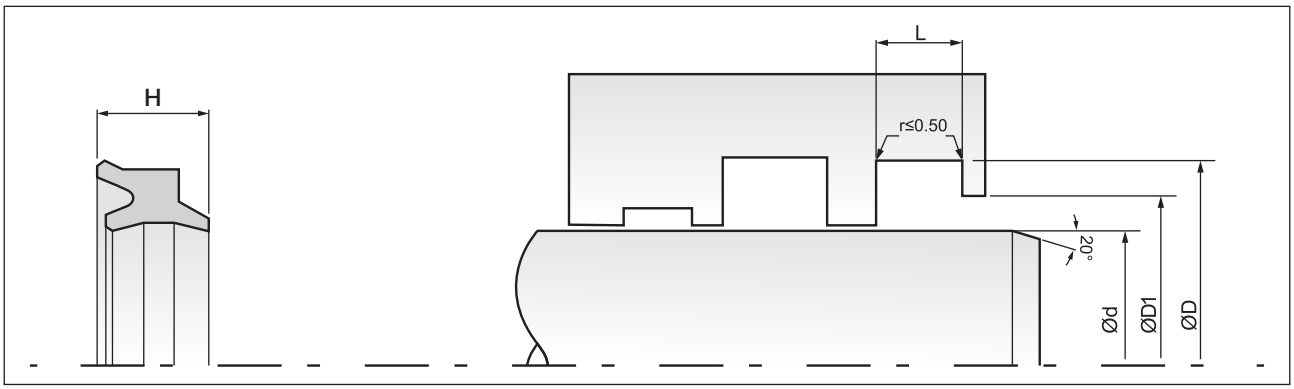

Part No.	d (f8)	D (H9)	L (+0.2)	H	Matl.	Mould No.
W13032L512	32.00	42.00	5.00	7.00	PU	WPH-2302
W130321117	32.00	42.00	5.00	7.50	NBR	WPS-6337
W13032L510	32.00	42.00	6.00	7.00	PU	WPH-2205
W130321112	32.00	42.00	6.00	7.80	NBR	WPS-5834
W130321111	32.00	42.00	6.00	8.00	NBR	WPS-5829
W130326707	32.00	42.00	6.00	8.00	FKM	WPS-5343
W13032G601	32.00	42.00	6.50	8.00	SBR	WPS-6330
W130326706	32.00	42.00	6.50	8.30	FKM	WPS-4826
W130321115	32.00	42.00	6.50	8.50	NBR	WPS-6245
W130326712	32.00	42.00	7.00	9.00	FKM	WPS-6119
W130321119	32.00	42.00	7.00	9.00	NBR	WPS-6774
W130321114	32.00	42.00	7.00	9.50	NBR	WPS-5990
W13032L502	32.00	42.00	7.00	10.00	PU	WPH-761
W130321110	32.00	42.00	7.50	8.50	NBR	WPS-5163
W130321122	32.00	42.00	7.50	10.00	NBR	WPS-7334
W130326717	32.00	42.00	7.50	10.00	FKM	WPS-7255
W130326713	32.00	42.00	8.10	10.50	FKM	WPS-6175
W130326708	32.00	43.00	5.00	8.00	FKM	WPS-5380
W130321116	32.00	44.00	3.00	5.00	NBR	WPS-6285
W130321104	32.00	44.00	4.70	8.50	NBR	WPS-2818
W130321108	32.00	44.00	5.00	9.00	NBR	WPS-4944
W13032L515	32.00	45.00	5.00	7.00	PU	WPH-2792
W130326718	32.54	40.00	4.60	5.80	FKM	WPS-7382
W130345901	34.92	44.23	5.00	6.50	PU	WPH-1081
W130341101	34.92	44.45	5.00	7.00	NBR	WPS-235
W130341104	34.92	44.45	5.38	7.00	NBR	WPS-6064
W130346702	34.92	44.45	5.50	9.00	FKM	WPS-6042
W130341103	34.92	44.45	6.20	8.30	NBR	WPS-4532
W130341102	34.92	44.50	5.00	7.00	NBR	WPS-2539
W13034L501	34.93	44.45	5.15	6.73	PU	WPH-1917
W130356703	35.00	42.00	5.20	7.50	FKM	WPS-2413
W130352301	35.00	42.00	7.50	10.50	CR	WPS-3773
W130356708	35.00	42.50	5.00	7.00	FKM	WPS-3932
W13035L507	35.00	43.00	4.70	6.00	PU	WPH-1360
W130355902	35.00	43.00	5.00	6.50	PU	WPH-2699
W130351101	35.00	43.00	5.00	6.50	NBR	WPS-1617
W13035L501	**35.00**	**43.00**	**5.00**	**6.50**	**PU**	**WPH-179**
W13035L501	35.00	43.00	5.00	6.50	PU	WPH-1783
W130354601	35.00	43.00	5.00	6.50	VMQ	WPS-5056
W130356702	35.00	43.00	5.00	6.50	FKM	WPS-6312
W130351113	35.00	43.00	5.00	7.00	NBR	WPS-4759
W130356707	35.00	43.00	5.00	7.00	FKM	WPS-3494
W13035L503	35.00	43.00	5.00	7.00	PU	WPH-950
W13035L502	35.00	43.00	5.00	8.00	PU	WPH-861
W130356704	35.00	43.00	5.50	6.50	FKM	WPS-2496
W130351121	35.00	43.00	5.50	7.50	NBR	WPS-7113
W13035L512	35.00	43.00	6.00	6.50	PU	WPH-1888
W130356701	35.00	43.00	6.00	8.00	FKM	WPS-2047
W130356712	35.00	43.00	8.00	10.50	FKM	WPS-7125
W13035L511	35.00	43.50	5.00	7.00	PU	WPH-1882
W130351109	35.00	43.50	5.00	7.00	NBR	WPS-3664
W130356603	35.00	44.00	5.00	6.00	FKM	WPS-3881

Part No.	d (f8)	D (H9)	L (+0.2)	H	Matl.	Mould No.
W13035L514	35.00	44.00	5.00	6.50	PU	WPH-2594
W130351115	35.00	44.00	5.30	7.50	NBR	WPS-6235
W13035Q201	35.00	44.00	8.00	11.00	PU	WPH-1461
W130356706	35.00	44.60	5.30	7.00	FKM	WPS-3412
W130356710	35.00	45.00	5.00	6.50	FKM	WPS-4918
W130352202	35.00	45.00	5.20	9.40	CR	WPS-4894
W130356709	35.00	45.00	6.00	7.50	FKM	WPS-3982
W130351118	35.00	45.00	6.50	8.50	NBR	WPS-6581
W130351107	35.00	46.00	5.00	8.00	NBR	WPS-2640
W130356711	35.00	46.00	5.00	9.00	FKM	WPS-5823
W13035L509	35.00	46.00	6.50	8.60	PU	WPH-1568
W13035L505	35.00	47.00	6.00	9.00	PU	WPH-1042
W130351111	35.00	47.00	6.30	9.30	NBR	WPS-4437
W130351116	35.00	48.00	6.00	9.00	NBR	WPS-6286
W130351114	35.00	48.00	6.00	9.00	NBR	WPS-5424
W130351119	35.00	48.00	6.00	10.00	NBR	WPS-6755
W130351001	35.00	48.00	6.30	9.50	NBR	WPS-6207
W13035Q202	35.10	45.20	6.00	8.00	PU	WPH-2070
W13035L504	35.50	39.50	5.00	7.00	PU	WPH-962
W13035L513	35.50	43.50	4.50	6.00	PU	WPH-2149
W13035L506	35.50	43.50	4.80	6.50	PU	WPH-1324
W130356705	35.50	43.50	5.00	6.50	FKM	WPS-3359
W13035L510	35.50	43.50	5.00	6.50	PU	WPH-1574
W13035L516	35.50	43.50	5.00	7.00	PU	WPH-2847
W130351108	35.50	45.00	5.00	7.00	NBR	WPS-3479
W130351120	35.50	46.80	6.50	9.00	NBR	WPS-6787
W130361103	36.00	40.00	4.00	7.00	NBR	WPS-3241
W130361108	36.00	43.00	5.00	6.50	NBR	WPS-6346
W130366710	36.00	44.00	4.00	8.00	FKM	WPS-5514
W130366701	36.00	44.00	4.50	5.80	FKM	WPS-4438
W130366701	36.00	44.00	4.50	5.80	FKM	WPS-1396
W130361101	36.00	44.00	4.50	5.80	NBR	WPS-2970
W130366712	36.00	44.00	4.50	6.00	FKM	WPS-6165
W13036L506	36.00	44.00	4.50	6.00	PU	WPH-2678
W130366704	36.00	44.00	5.00	6.00	FKM	WPS-3311
W130361104	36.00	44.00	5.00	7.00	NBR	WPS-4248
W130366711	36.00	44.00	5.00	7.00	FKM	WPS-5995
W13036L501	**36.00**	**44.00**	**5.00**	**7.00**	**PU**	**WPH-755**
W13036L503	36.00	44.00	5.00	8.00	PU	WPH-1148
W130366501	36.00	44.00	5.00	8.00	FKM	WPS-6428
W13036L507	36.00	44.00	5.00	8.00	PU	WPH-2619
W130366602	36.00	44.00	5.50	7.50	FKM	WPS-4002
W130361107	36.00	44.00	6.50	8.00	NBR	WPS-6212
W130361106	36.00	44.00	8.00	12.00	NBR	WPS-5812
W13036L510	36.00	44.50	5.30	6.50	PU	WPH-2887
W130366702	36.00	44.50	6.00	8.00	FKM	WPS-3020
W13036L508	36.00	45.00	4.50	6.00	PU	WPH-2681
W13036L504	36.00	45.00	5.00	7.50	PU	WPH-1384
W130366706	36.00	45.00	8.00	10.00	FKM	WPS-4692
W130366709	36.00	46.00	4.50	6.25	FKM	WPS-5204
W13036L505	36.00	46.00	4.80	7.50	PU	WPH-2063
W130361102	36.00	46.00	5.00	8.00	NBR	WPS-2593

Bold sizes are readily available in stock.
Other materials are available on request.

W13

Heavy Duty Wiper Seal

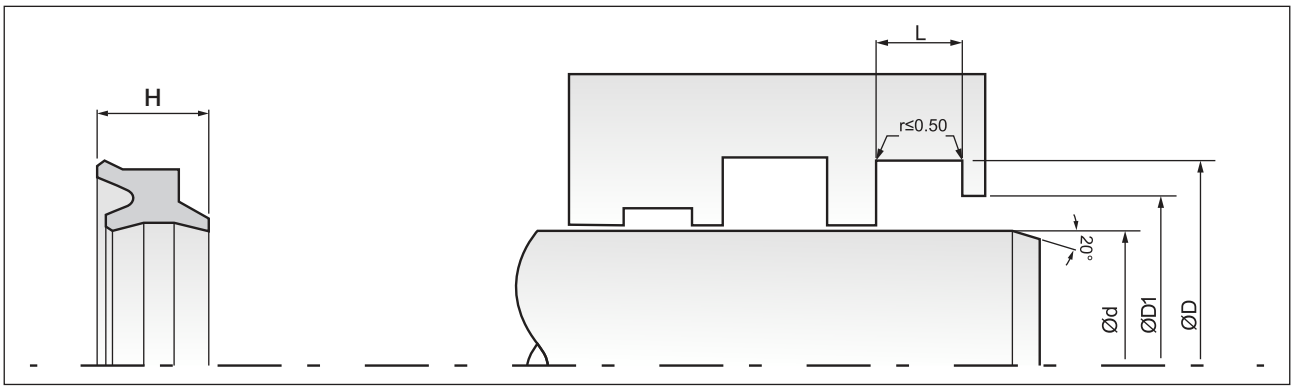

Part No.	d (f8)	D (H9)	L (+0.2)	H	Matl.	Mould No.
W130366601	36.00	46.00	5.00	8.50	FKM	WPS-2241
W13036L502	36.00	46.00	6.00	8.00	PU	WPH-992
W130361001	36.00	46.00	6.50	8.50	NBR	WPS-4413
W130361105	36.00	47.20	7.00	10.00	NBR	WPS-5162
W130381101	38.00	45.00	4.00	6.00	NBR	WPS-1199
W13038L505	38.00	45.00	5.00	7.00	PU	WPH-2552
W130386702	38.00	46.00	4.00	6.00	FKM	WPS-2408
W13038L503	38.00	46.00	4.00	6.00	PU	WPH-2375
W13038L504	38.00	46.00	5.00	6.50	PU	WPH-2539
W130386703	38.00	46.00	5.00	7.00	FKM	WPS-3236
W13038L501	38.00	46.00	5.00	7.00	PU	WPH-768
W130386704	38.10	44.45	3.50	5.00	FKM	WPS-4402
W130386701	38.10	44.45	4.50	6.50	FKM	WPS-1910
W130381102	38.10	47.22	5.20	7.00	NBR	WPS-6239
W13038L502	38.10	47.54	4.46	7.15	PU	WPH-931
W130386705	38.10	47.62	4.90	9.00	FKM	WPS-5879
W13039L501	39.00	51.00	7.00	9.00	PU	WPH-1338
W130396701	39.50	55.00	5.00	7.00	FKM	WPS-7256
W130406710	40.00	46.00	6.80	10.00	FKM	WPS-3952
W130406701	40.00	47.00	4.00	7.00	FKM	WPS-1740
W130406601	40.00	48.00	3.00	5.00	FKM	WPS-2400
W130406721	40.00	48.00	4.00	7.00	FKM	WPS-5571
W13040L509	40.00	48.00	4.30	5.80	PU	WPH-1399
W130406705	40.00	48.00	4.50	5.80	FKM	WPS-3115
W130406705	40.00	48.00	4.50	5.80	FKM	WPS-2863
W13040L517	40.00	48.00	4.50	6.00	PU	WPH-2108
W13040L510	40.00	48.00	4.80	6.50	PU	WPH-1447
W13040L515	40.00	48.00	4.80	6.50	PU	WPH-1828
W130406732	40.00	48.00	5.00	5.80	FKM	WPS-7141
W13040L504	40.00	48.00	5.00	6.00	PU	WPH-872
W13040L504	40.00	48.00	5.00	6.00	PU	WPH-2621
W130401101	40.00	48.00	5.00	6.50	NBR	WPS-1780
W130401102	40.00	48.00	5.00	6.50	NBR	WPS-1264
W13040L50	**40.00**	**48.00**	**5.00**	**6.50**	**PU**	**WPH-115**
W130406723	40.00	48.00	5.00	6.50	FKM	WPS-5717
W13040L502	**40.00**	**48.00**	**5.00**	**6.50**	**PU**	**WPH-2532**
W13040L505	40.00	48.00	5.00	7.00	PU	WPH-930
W130401110	40.00	48.00	5.00	7.00	NBR	WPS-3185
W130406706	40.00	48.00	5.00	7.50	FKM	WPS-2874
W13040L507	40.00	48.00	5.00	8.00	PU	WPH-1016
W130406715	40.00	48.00	5.00	8.00	FKM	WPS-4619
W130406712	40.00	48.00	6.00	6.50	FKM	WPS-4086
W130401114	40.00	48.00	6.00	8.00	NBR	WPS-3504
W130406727	40.00	48.00	6.00	8.00	FKM	WPS-6503
W13040L519	40.00	48.00	6.00	8.00	PU	WPH-2601
W130401130	40.00	48.00	7.50	10.00	NBR	WPS-7103
W130401113	40.00	48.00	8.00	10.00	NBR	WPS-3442
W130406717	40.00	48.00	8.00	10.00	FKM	WPS-4658
W130401124	40.00	48.00	8.00	10.30	NBR	WPS-5506
W130406707	40.00	48.00	8.00	11.50	FKM	WPS-3358
W130401106	40.00	48.20	4.50	6.50	NBR	WPS-2302
W13040L518	40.00	48.50	5.00	6.50	PU	WPH-2270

Part No.	d (f8)	D (H9)	L (+0.2)	H	Matl.	Mould No.
W130406708	40.00	48.50	8.00	12.00	FKM	WPS-3711
W130406729	40.00	48.60	5.00	7.00	FKM	WPS-6682
W130406718	40.00	48.70	7.70	9.50	FKM	WPS-4919
W130401125	40.00	49.00	6.50	8.80	NBR	WPS-5735
W130401002	40.00	49.00	6.50	9.00	NBR	WPS-1613
W13040L503	40.00	50.00	5.00	7.00	PU	WPH-773
W130406711	40.00	50.00	5.00	7.00	FKM	WPS-4020
W130401115	40.00	50.00	5.00	8.00	NBR	WPS-3527
W13040L401	40.00	50.00	6.00	7.40	PU	WPH-1336
W130401108	40.00	50.00	6.00	7.50	NBR	WPS-2753
W130406724	40.00	50.00	6.00	7.50	FKM	WPS-5811
W13040G601	40.00	50.00	6.00	7.50	SBR	WPS-6331
W130401116	40.00	50.00	6.00	8.00	NBR	WPS-3658
W13040L508	40.00	50.00	6.00	8.00	PU	WPH-1387
W130401122	40.00	50.00	6.00	9.00	NBR	WPS-5357
W13040L523	40.00	50.00	6.00	9.00	PU	WPH-2892
W130406728	40.00	50.00	6.50	8.00	FKM	WPS-6604
W130401104	40.00	50.00	6.50	8.50	NBR	WPS-1590
W13040L514	40.00	50.00	6.50	8.50	PU	WPH-2081
W13040L516	40.00	50.00	6.50	9.00	PU	WPH-1900
W130401003	40.00	50.00	6.70	8.50	NBR	WPS-4254
W130406716	40.00	50.00	7.00	9.00	FKM	WPS-4642
W130401118	40.00	50.00	7.00	9.00	NBR	WPS-4574
W13040L506	40.00	50.00	7.00	10.00	PU	WPH-929
W130401107	40.00	50.00	7.00	10.00	NBR	WPS-2345
W130406709	40.00	50.00	7.00	10.00	FKM	WPS-3737
W13040L501	40.00	50.00	7.00	11.50	PU	WPH-649
W1304067002	40.00	50.00	8.00	10.00	FKM	WPS-6171
W130401123	40.00	50.00	8.00	10.70	NBR	WPS-5358
W13040L511	40.00	50.00	8.00	11.00	PU	WPH-1490
W130406713	40.00	50.00	8.00	12.00	FKM	WPS-4433
W130406726	40.00	50.00	10.00	15.00	FKM	WPS-6273
W130401126	40.00	51.00	6.50	8.00	NBR	WPS-7480
W13040L512	40.00	51.00	6.80		PU	WPH-1523
W13040L521	40.00	52.00	5.00	7.00	PU	WPH-2791
W130406725	40.00	52.00	6.00	10.00	FKM	WPS-6074
W130401129	40.00	52.00	6.50	9.00	NBR	WPS-6823
W130406704	40.00	52.00	7.00	10.00	FKM	WPS-2242
W130401128	40.00	53.00	4.00	6.00	NBR	WPS-6284
W130406730	40.00	53.50	5.00	8.00	FKM	WPS-6827
W130401109	40.00	54.00	10.00	12.00	NBR	WPS-3008
W13040R301	40.00	55.00	6.00	7.00	PU	WPH-1255
W130401120	40.00	55.00	6.50	8.50	NBR	WPS-4953
W13040L513	40.00	55.00	13.00	17.00	PU	WPH-1712
W13040L522	40.00	60.00	7.00	10.00	PU	WPH-2837
W130401111	40.00	60.00	9.70	13.00	NBR	WPS-3338
W130411101	41.27	47.62	5.00	6.20	NBR	WPS-3428
W13042L501	42.00	50.00	4.50	6.00	PU	WPH-2154
W13042L502	42.00	52.00	4.50	6.00	PU	WPH-2673
W130436701	43.00	52.00	5.00	7.00	FKM	WPS-3608
W13044L503	44.00	53.52	5.20	7.00	PU	WPH-1616
W13044L502	44.00	54.00	5.00	7.00	PU	WPH-786

Bold sizes are readily available in stock.
Other materials are available on request.

W13

Heavy Duty Wiper Seal

MAX SPARE LIMITED
QUALITY. PRECISION. SPEED.

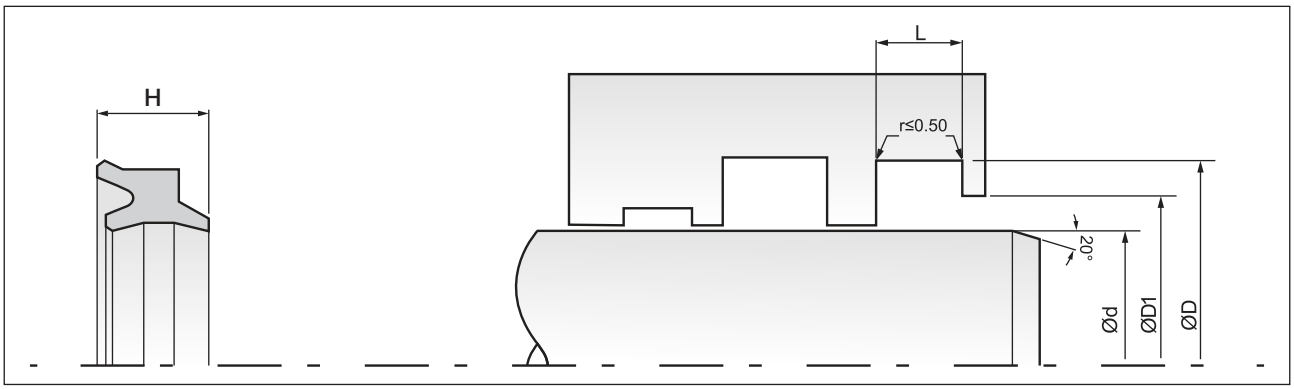

Part No.	d (f8)	D (H9)	L (+0.2)	H	Matl.	Mould No.
W130446704	44.40	52.50	3.00	5.00	FKM	WPS-4632
W130446705	44.45	53.18	5.35	9.12	FKM	WPS-5750
W130441101	44.45	53.70	5.00	7.00	NBR	WPS-3954
W13044L501	44.45	53.75	5.00	8.18	PU	WPH-453
W130446701	44.45	53.97	5.00	7.00	FKM	WPS-2969
W130447601	44.45	53.97	5.00	7.00	AFLAS	WPS-7046
W130441001	44.45	53.97	5.20	6.80	NBR	WPS-4784
W130446703	44.45	53.97	5.38	7.00	FKM	WPS-4154
W130446702	44.50	53.50	5.00	7.00	FKM	WPS-3258
W130456725	45.00	53.00	3.00	6.00	FKM	WPS-6249
W130456710	45.00	53.00	4.00	5.80	FKM	WPS-1743
W130456714	45.00	53.00	4.50	5.80	FKM	WPS-3337
W13045L504	45.00	53.00	4.50	5.80	PU	WPH-897
W130451003	45.00	53.00	4.50	5.80	NBR	WPS-5234
W130451104	45.00	53.00	4.80	7.50	NBR	WPS-2399
W130456722	45.00	53.00	5.00	5.80	FKM	WPS-5110
W13045L502	**45.00**	**53.00**	**5.00**	**6.50**	**PU**	**WPH-172**
W130451102	45.00	53.00	5.00	6.50	FKM	WPS-1263
W130456701	45.00	53.00	5.00	6.50	FKM	WPS-3201
W130456701	45.00	53.00	5.00	6.50	FKM	WPS-3771
W13045L502	45.00	53.00	5.00	6.50	PU	WPH-1765
W13045L510	45.00	53.00	5.00	6.50	PU	WPH-1837
W130456724	45.00	53.00	5.00	6.50	FKM	WPS-6015
W130456712	45.00	53.00	5.00	7.00	FKM	WPS-3163
W13045L505	45.00	53.00	5.00	7.00	PU	WPH-1561
W130456713	45.00	53.00	5.00	7.00	FKM	WPS-3165
W130451105	45.00	53.00	5.00	7.00	NBR	WPS-2712
W13045L505	**45.00**	**53.00**	**5.00**	**7.00**	**PU**	**WPH-595**
W130456711	45.00	53.00	5.00	7.50	FKM	WPS-2875
W130455903	45.00	53.00	5.00	8.00	PU	WPH-1282
W13045L501	45.00	53.00	5.00	8.00	PU	WPH-733
W130456720	45.00	53.00	5.00	8.00	FKM	WPS-4830
W13045L512	45.00	53.00	5.30	7.00	PU	WPH-2679
W13045L511	45.00	53.00	5.80	8.00	PU	WPH-2618
W130456728	45.00	53.00	6.00	8.00	FKM	WPS-6625
W130456729	45.00	53.00	6.00	9.00	FKM	WPS-6864
W1304567011	45.00	53.00	11.00	15.00	FKM	WPS-2423
W130456731	45.00	53.60	5.00	7.00	FKM	WPS-7088
W13045L507	45.00	53.60	5.30	6.50	PU	WPH-1328
W130456726	45.00	54.00	4.50	6.00	FKM	WPS-6407
W13045L503	45.00	54.00	6.00	8.00	PU	WPH-749
W130456721	45.00	55.00	5.00	7.00	FKM	WPS-4972
W13045L509	45.00	55.00	5.00	10.00	PU	WPH-1677
W130456715	45.00	55.00	6.00	8.00	FKM	WPS-3459
W130456727	45.00	55.00	6.50	8.00	FKM	WPS-6605
W130451002	45.00	55.00	6.50	8.20	NBR	WPS-4655
W130451004	45.00	55.00	6.60	8.80	NBR	WPS-6311
W130451107	45.00	55.00	6.70	9.00	NBR	WPS-4268
W130456719	45.00	55.00	7.00	10.00	FKM	WPS-4768
W130451111	45.00	56.00	11.50	15.00	NBR	WPS-6824
W130456718	45.00	57.00	5.00	8.50	FKM	WPS-4712
W130456602	45.00	57.00	7.00	9.50	FKM	WPS-6584

Part No.	d (f8)	D (H9)	L (+0.2)	H	Matl.	Mould No.
W130456716	45.00	57.00	11.00	14.00	FKM	WPS-4138
W130456723	45.00	58.00	10.00	14.00	FKM	WPS-5346
W130456730	45.80	61.85	6.00	9.50	FKM	WPS-6867
W130461101	46.00	56.00	4.50	8.00	NBR	WPS-3709
W130486701	48.00	58.60	5.50	8.00	FKM	WPS-4798
W130506720	50.00	56.50	4.30	6.30	FKM	WPS-5979
W130501109	50.00	57.00	5.00	7.00	NBR	WPS-4948
W130501111	50.00	57.65	5.00	6.80	NBR	WPS-5027
W130506722	50.00	58.00	3.50	5.00	FKM	WPS-7515
W130506707	50.00	58.00	4.50	5.80	FKM	WPS-3237
W130506708	50.00	58.00	4.50	6.00	FKM	WPS-3238
W130501114	50.00	58.00	4.50	6.50	NBR	WPS-5309
W13050L509	50.00	58.00	4.80	6.50	PU	WPH-1827
W130506719	50.00	58.00	4.80	6.50	FKM	WPS-5935
W130506713	50.00	58.00	5.00	5.80	FKM	WPS-4758
W130501101	50.00	58.00	5.00	5.80	NBR	WPS-2196
W13050L503	50.00	58.00	5.00	6.00	PU	WPH-874
W130501108	50.00	58.00	5.00	6.30	NBR	WPS-4361
W13050L513	50.00	58.00	5.00	6.30	PU	WPH-1999
W130501102	50.00	58.00	5.00	6.50	NBR	WPS-1265
W13050L501	**50.00**	**58.00**	**5.00**	**6.50**	**PU**	**WPH-114**
W130504601	50.00	58.00	5.00	6.50	VMQ	WPS-5055
W13050L508	50.00	58.00	5.00	7.00	PU	WPH-1581
W130506704	50.00	58.00	5.00	7.50	FKM	WPS-2876
W13050L512	50.00	58.00	5.00	7.50	PU	WPH-2020
W130506714	50.00	58.00	5.00	8.00	FKM	WPS-4833
W13050L507	50.00	58.00	5.00	8.00	PU	WPH-1489
W13012L516	50.00	58.00	5.30	7.20	PU	WPH-2535
W130501117	50.00	58.00	5.50	9.00	NBR	WPS-5789
W130506715	50.00	58.00	6.00	6.50	FKM	WPS-5053
W13050L505	50.00	58.00	6.00	8.00	PU	WPH-1118
W13050R302	50.00	58.00	6.00		PU	WPH-186
W130506712	50.00	58.00	8.00	10.00	FKM	WPS-4462
W13050L402	50.00	58.00	8.00	10.00	PU	WPH-2189
W130501115	50.00	58.50	6.00	9.00	NBR	WPS-5550
W13050L506	50.00	58.80	6.30	8.30	PU	WPH-1122
W13050L514	50.00	58.80	6.30	8.30	PU	WPH-2224
W130506721	50.00	60.00	4.00	6.00	FKM	WPS-6971
W13050L517	50.00	60.00	4.50	6.00	PU	WPH-2705
W13050L504	50.00	60.00	5.00	7.00	PU	WPH-928
W130501120	50.00	60.00	5.00	7.00	NBR	WPS-6594
W130506709	50.00	60.00	5.00	7.00	FKM	WPS-3320
W130501118	50.00	60.00	6.00	8.00	NBR	WPS-6338
W130501110	50.00	60.60	5.00	7.00	NBR	WPS-4971
W130501123	50.00	60.60	5.30	7.00	NBR	WPS-6840
W130501112	50.00	61.00	5.50	7.50	NBR	WPS-5092
W130506703	50.00	62.00	5.00	8.50	FKM	WPS-2808
W130506706	50.00	62.00	5.00	9.50	FKM	WPS-3211
W130506718	50.00	62.00	10.80	14.00	FKM	WPS-5800
W130506710	50.00	62.00	11.50	14.00	FKM	WPS-3735
W130501122	50.00	62.00	11.50	14.00	NBR	WPS-6822
W130501113	50.00	62.00	13.00	16.00	NBR	WPS-5280

Bold sizes are readily available in stock.
Other materials are available on request.

W13

Heavy Duty Wiper Seal

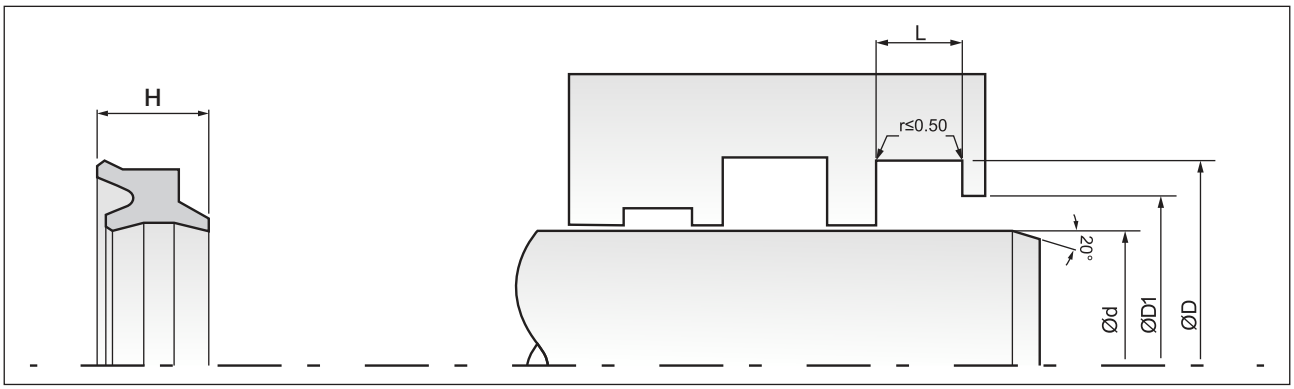

Part No.	d (f8)	D (H9)	L (+0.2)	H	Matl.	Mould No.
W13050L510	50.00	62.50	9.00	12.00	PU	WPH-1836
W130506716	50.00	63.00	10.00	12.50	FKM	WPS-5188
W13050L502	50.00	65.00	10.00	13.00	PU	WPH-741
W13050L401	50.00	70.00	12.00	13.00	PU	WPH-1741
W130501001	50.80	60.00	5.00	7.00	NBR	WPS-4063
W130501103	50.80	60.11	5.15	6.72	NBR	WPS-3271
W130505901	50.80	60.11	5.15	6.72	PU	WPH-1087
W130502001	50.80	60.32	4.76	7.14	CR	WPS-2398
W130506705	50.80	60.32	5.00	6.50	FKM	WPS-2923
W130501119	50.80	60.32	5.00	7.00	NBR	WPS-6450
W130506711	50.80	60.32	5.08	6.35	FKM	WPS-4241
W13050L5301	50.80	60.32	5.38	6.70	AFLAS	WPS-5537
W13012L515	52.00	61.00	5.30	7.00	PU	WPH-2495
W13053L502	53.00	63.00	6.00	8.00	PU	WPH-1723
W13053L501	53.97	63.50	5.20	7.00	PU	WPH-1617
W13054R301	54.00	68.00	5.60	10.50	PU	WPH-1099
W13055L501	55.00	63.00	5.00	6.50	PU	WPH-177
W130551103	55.00	63.00	5.00	6.50	NBR	WPS-1369
W130556704	55.00	63.00	5.00	6.50	FKM	WPS-4816
W13055L503	55.00	63.00	5.00	7.00	PU	WPH-1194
W130556401	55.00	63.00	5.50	7.00	NBR	WPS-6375
W13055L506	55.00	63.00	6.00	7.00	PU	WPH-2852
W130551104	55.00	63.60	5.30	7.00	NBR	WPS-2457
W130556706	55.00	63.60	5.30	7.00	FKM	WPS-5904
W130556703	55.00	65.00	5.00	7.00	FKM	WPS-4790
W13055L502	55.00	65.00	6.00	7.30	PU	WPH-732
W130556705	55.00	65.00	6.00	8.00	FKM	WPS-5825
W13055L507	55.00	65.00	6.00	9.00	PU	WPH-2873
W13055L505	55.00	67.00	11.00	15.00	PU	WPH-2514
W130560801	56.00	63.00	3.40	3.80	NBR	WPS-6955
W130566718	56.00	63.00	5.30	6.50	FKM	WPS-5052
W130566702	56.00	64.00	5.00	6.50	FKM	WPS-1411
W13056L502	56.00	64.00	5.00	6.50	PU	WPH-972
W130561105	56.00	64.00	5.00	6.50	NBR	WPS-6836
W130561102	56.00	64.00	5.00	7.00	NBR	WPS-2437
W130566608	56.00	64.00	5.00	7.00	FKM	WPS-2834
W130566709	56.00	64.00	6.00	8.00	FKM	WPS-3492
W130566720	56.00	64.50	5.00	6.50	FKM	WPS-5552
W130566704	56.00	64.60	5.00	8.00	FKM	WPS-2621
W130566714	56.00	65.00	4.50	7.50	FKM	WPS-4534
W130566705	56.00	65.33	5.00	6.50	FKM	WPS-2990
W130566712	56.00	66.00	4.20	8.00	FKM	WPS-4125
W130566703	56.00	66.00	5.00	7.00	FKM	WPS-2433
W13056L501	**56.00**	**66.00**	**5.00**	**7.00**	**PU**	**WPH-927**
W130566708	56.00	66.00	5.30	6.80	FKM	WPS-3275
W130561101	56.00	66.00	5.50	6.80	NBR	WPS-1886
W130566710	56.00	66.00	5.50	6.80	FKM	WPS-3603
W130566711	56.00	66.00	5.80	8.50	FKM	WPS-3942
W130561106	56.00	66.00	6.00	6.50	NBR	WPS-4372
W130566715	56.00	66.00	6.00	6.80	FKM	WPS-4757
W13056L503	56.00	66.00	6.00	7.00	PU	WPH-994
W130566716	56.00	66.00	6.00	8.00	FKM	WPS-4767

Part No.	d (f8)	D (H9)	L (+0.2)	H	Matl.	Mould No.
W13056L505	56.00	66.00	6.00	8.00	PU	WPH-2121
W130566713	56.00	66.00	6.00	9.00	FKM	WPS-4367
W130576704	57.00	67.00	5.30	7.00	FKM	WPS-6166
W130576701	57.00	68.00	3.00	8.00	FKM	WPS-3122
W130576702	57.00	70.00	5.00	7.00	FKM	WPS-3220
W130576703	57.15	65.15	5.50	7.50	FKM	WPS-6054
W130576705	57.15	69.72	7.00	10.00	FKM	WPS-7379
W130571101	57.15	69.85	6.35	12.70	NBR	WPS-3688
W130606702	60.00	68.00	5.00	6.00	FKM	WPS-4989
W130601105	60.00	68.00	5.00	6.50	NBR	WPS-1609
W130605901	**60.00**	**68.00**	**5.00**	**6.50**	**PU**	**WPH-176**
W130606707	60.00	68.00	5.00	6.50	FKM	WPS-6353
W130606705	60.00	68.00	5.00	7.00	FKM	WPS-5798
W13060L505	60.00	68.00	5.00	7.00	PU	WPH-1195
W130605903	60.00	68.60	5.00	6.50	PU	WPH-2869
W130606701	60.00	69.00	6.00	8.00	FKM	WPS-2988
W13060L509	60.00	70.00	5.00	6.50	PU	WPH-2064
W130606706	60.00	70.00	5.00	7.00	FKM	WPS-6250
W13060L610	60.00	70.00	5.00	7.00	PU	WPH-2780
W13060L502	**60.00**	**70.00**	**6.00**	**6.80**	**PU**	**WPH-795**
W13060L504	60.00	70.00	6.00	7.00	PU	WPH-2622
W13060L507	60.00	70.00	6.00	8.00	PU	WPH-1700
W13060L506	60.00	70.00	7.00	8.00	PU	WPH-1414
W130606703	60.00	73.50	5.00	8.00	FKM	WPS-5108
W13060L508	60.00	80.00	7.00	10.00	PU	WPH-2039
W130631104	63.00	71.00	5.00	6.50	NBR	WPS-4213
W13063L501	**63.00**	**71.00**	**5.00**	**6.50**	**PU**	**WPH-182**
W130636713	63.00	71.00	6.00	6.50	FKM	WPS-5816
W130631101	63.00	71.00	6.00	8.00	NBR	WPS-5006
W130636717	63.00	71.50	5.00	7.50	FKM	WPS-7179
W130636601	63.00	73.00	5.30	6.20	FKM	WPS-3848
W130636704	63.00	73.00	5.50	6.80	FKM	WPS-3669
W130636716	63.00	73.00	5.50	7.00	FKM	WPS-6437
W130636710	63.00	73.00	5.90	7.00	FKM	WPS-4733
W130636702	63.00	73.00	6.00	8.50	FKM	WPS-2877
W130636707	63.00	75.00	6.50	10.00	FKM	WPS-4584
W13063L506	63.00	75.00	7.00	10.00	PU	WPH-2752
W130636714	63.00	78.00	6.00	10.00	FKM	WPS-5612
W130631002	63.50	73.81	5.80	9.00	NBR	WPS-5011
W130636701	63.50	75.80	6.30	8.00	FKM	WPS-2207
W130631101	63.50	76.07	6.75	8.65	NBR	WPS-4425
W13063L505	63.50	76.20	6.35	9.53	PU	WPH-2686
W13063L507	63.50	76.20	6.70	8.60	PU	WPH-2896
W130636712	63.50	76.20	6.80	8.00	FKM	WPS-5351
W130631001	63.50	76.20	6.80	8.80	NBR	WPS-4797
W130636703	63.50	76.20	6.80	9.00	FKM	WPS-3448
W130631103	63.50	76.20	6.85	8.92	NBR	WPS-160
W130636715	63.50	76.20	7.00	10.00	FKM	WPS-5953
W13065L503	65.00	72.00	6.00	7.50	PU	WPH-1886
W130651102	65.00	73.00	5.00	6.50	NBR	WPS-674
W13065L501	65.00	73.00	5.00	6.80	PU	WPH-835
W130651101	65.00	73.60	5.30	7.00	NBR	WPS-4114

Bold sizes are readily available in stock.
Other materials are available on request.

W13

Heavy Duty Wiper Seal

MAX SPARE LIMITED
QUALITY. PRECISION. SPEED.

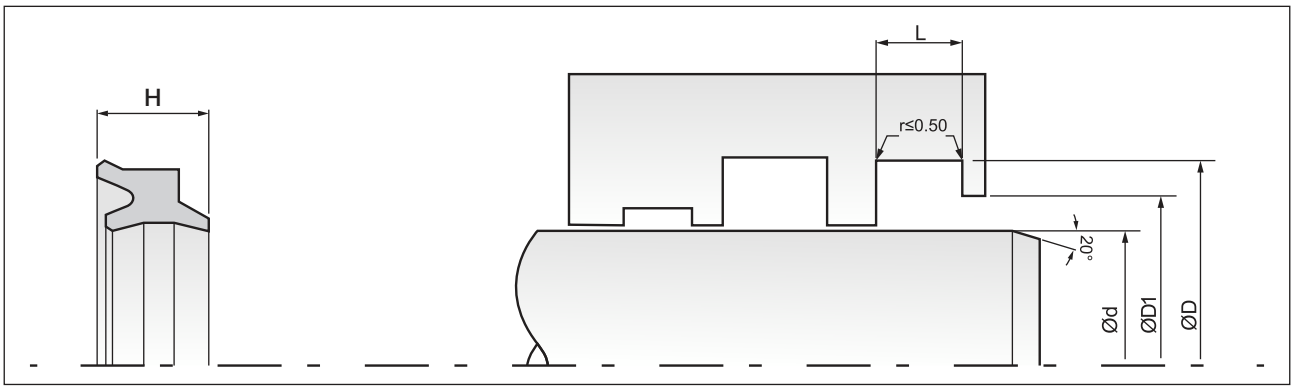

Part No.	d (f8)	D (H9)	L (+0.2)	H	Matl.	Mould No.
W13065L504	65.00	75.00	5.30	6.80	PU	WPH-2313
W13065R301	65.00	75.00	6.00	9.70	PU	WPH-1746
W13065L502	65.00	75.00	7.00	10.00	PU	WPH-926
W130706715	70.00	78.00	4.00	7.00	FKM	WPS-5180
W130706718	70.00	78.00	5.00	8.00	FKM	WPS-5936
W13070L503	70.00	78.00	5.00	10.00	PU	WPH-734
W13070L506	70.00	78.00	5.50	10.00	PU	WPH-1676
W130706708	70.00	78.10	4.50	8.20	FKM	WPS-3451
W130706721	70.00	78.60	5.30	7.00	FKM	WPS-6500
W13070L508	**70.00**	**80.00**	**5.00**	**7.00**	**PU**	**WPH-1847**
W130706706	70.00	80.00	5.00	7.00	FKM	WPS-2865
W130706801	70.00	80.00	5.00	7.00	FKM	WPS-6927
W130706710	70.00	80.00	5.30	6.70	FKM	WPS-4077
W130706712	70.00	80.00	5.30	6.80	FKM	WPS-4747
W130706713	70.00	80.00	6.00	6.80	FKM	WPS-5021
W130706707	70.00	80.00	6.00	8.00	FKM	WPS-3071
W130706702	70.00	80.00	6.00	8.00	FKM	WPS-1569
W130701101	70.00	80.00	6.00	8.00	NBR	WPS-1266
W13070L501	**70.00**	**80.00**	**6.00**	**8.00**	**PU**	**WPH-116**
W130705905	70.00	80.00	6.00	8.50	PU	WPH-608
W130706709	70.00	80.00	6.00	8.50	FKM	WPS-6769
W13070L511	70.00	80.00	6.00	9.00	PU	WPH-2889
W13070L519	70.00	80.00	6.00	9.00	PU	WPH-2361
W130706722	70.00	80.00	6.00	9.00	FKM	WPS-7192
W130706714	70.00	80.00	7.00	8.00	FKM	WPS-5112
W13070L507	70.00	80.00	7.00	10.00	PU	WPH-1708
W130706720	70.00	80.00	7.50	11.00	FKM	WPS-6483
W130708901	70.00	80.00	10.00	14.00	PU	WPH-746
W130706719	70.00	80.60	5.30	7.00	FKM	WPS-6400
W130706717	70.00	82.00	10.50	14.50	FKM	WPS-5315
W130701103	70.00	83.00	4.90	9.80	NBR	WPS-3707
W140701115	70.00	83.00	9.00	10.80	NBR	WPS-7199
W130706703	70.00	83.50	6.00	8.00	FKM	WPS-2620
W130706716	70.00	84.00	8.00	11.00	FKM	WPS-5252
W130716701	71.00	80.00	6.00	8.00	FKM	WPS-3495
W130716702	71.00	81.00	6.00	8.00	FKM	WPS-6195
W130711101	71.00	81.00	6.00	8.00	NBR	WPS-2154
W13071L501	71.00	82.00	6.00	8.50	PU	WPH-1572
W130756701	75.00	83.60	5.30	7.00	FKM	WPS-5746
W13075L502	75.00	84.00	7.00	10.00	PU	WPH-1149
W13075L501	75.00	85.00	5.50	6.80	PU	WPH-662
W13075L503	75.00	85.00	6.00	8.00	PU	WPH-1343
W130756702	75.00	85.00	6.00	8.00	FKM	WPS-6215
W130751103	75.00	85.00	6.00	8.00	NBR	WPS-6106
W130756601	75.00	86.50	11.40	15.50	FKM	WPS-2403
W130761101	76.00	88.80	6.70	9.00	NBR	WPS-2555
W130761104	76.20	88.90	7.00	10.00	NBR	WPS-6254
W130761102	76.50	88.70	6.80	12.00	NBR	WPS-4131
W130795901	79.00	87.00	4.50	6.70	PU	WPH-112
W13080L508	80.00	90.00	5.30	6.80	PU	WPH-2778
W130806707	80.00	90.00	5.50	7.00	FKM	WPS-3639
W13080L502	80.00	90.00	5.70	7.30	PU	WPH-1271

Part No.	d (f8)	D (H9)	L (+0.2)	H	Matl.	Mould No.
W13080L503	80.00	90.00	6.00	7.00	PU	WPH-1339
W130806710	80.00	90.00	6.00	8.00	FKM	WPS-2878
W130801101	80.00	90.00	6.00	8.00	NBR	WPS-919
W13080L507	**80.00**	**90.00**	**6.00**	**8.00**	**PU**	**WPH-2611**
W13080L507	**80.00**	**90.00**	**6.00**	**8.00**	**PU**	**WPH-2716**
W130806702	80.00	90.00	7.00	9.00	FKM	WPS-1812
W13080L506	80.00	92.00	6.00	9.00	PU	WPH-2059
W13080L504	80.00	92.00	7.00	10.00	PU	WPH-1679
W13080L505	80.00	92.00	7.00	12.00	PU	WPH-1918
W130806704	80.00	93.50	6.00	10.50	FKM	WPS-2832
W130801102	80.00	94.00	11.00	13.00	NBR	WPS-7040
W130821101	82.50	96.00	6.00	9.50	NBR	WPS-6462
W130856701	85.00	95.00	6.00	8.00	FKM	WPS-3539
W13085L501	**85.00**	**95.00**	**6.00**	**8.00**	**PU**	**WPH-380**
W130851101	85.00	95.00	6.00	8.00	NBR	WPS-1282
W13085L502	85.00	95.00	7.00	8.50	PU	WPH-1722
W13085L504	85.00	95.00	9.00	11.00	PU	WPH-2140
W13085L503	85.00	97.00	7.00	12.00	PU	WPH-1919
W13087L501	87.70	101.90	6.50	7.80	PU	WPH-2180
W130881101	88.00	102.00	5.90	10.00	NBR	WPS-3708
W130886701	88.90	101.60	6.50	8.50	FKM	WPS-2919
W130886702	88.90	101.60	7.00	9.00	FKM	WPS-6181
W13088L501	88.90	101.60	8.50		PU	WPH-605
W13090L504	90.00	98.00	6.00	8.00	PU	WPH-1291
W130906705	90.00	99.00	6.50	8.50	FKM	WPS-3545
W130906703	90.00	100.00	5.00	7.00	FKM	WPS-3415
W13090L508	90.00	100.00	5.00	7.00	PU	WPH-2069
W13090L512	90.00	100.00	5.40	7.00	PU	WPH-2614
W130906702	90.00	100.00	5.50	6.80	FKM	WPS-2522
W13090L501	90.00	100.00	5.50	6.80	PU	WPH-501
W13090L513	90.00	100.00	5.50	7.00	PU	WPH-2812
W13090L509	90.00	100.00	6.00	6.80	PU	WPH-2342
W130906711	90.00	100.00	6.00	6.80	FKM	WPS-1156
W130901105	90.00	100.00	6.00	8.00	NBR	WPS-1109
W13090L503	90.00	100.00	6.00	8.00	PU	WPH-1785
W13090L503	**90.00**	**100.00**	**6.00**	**8.00**	**PU**	**WPH-1056**
W130906701	90.00	100.00	6.00	8.00	FKM	WPS-4371
W130906706	90.00	100.00	6.00	8.50	FKM	WPS-3749
W13090L510	90.00	100.00	6.00	9.00	PU	WPH-2360
W130906712	90.00	100.00	6.00	9.70	FKM	WPS-6459
W130906601	90.00	100.00	6.50	9.00	FKM	WPS-7496
W130906704	90.00	100.00	7.00	8.00	FKM	WPS-3489
W130901106	90.00	100.00	7.00	8.00	NBR	WPS-4373
W13090L505	90.00	102.00	6.00	8.00	PU	WPH-1429
W130906707	90.00	102.00	6.00	12.00	FKM	WPS-4717
W130901107	90.00	102.00	6.50	10.00	NBR	WPS-6155
W13090L506	90.00	102.00	7.00	10.00	PU	WPH-1678
W130901104	90.00	102.00	7.00	10.00	NBR	WPS-2145
W13090L507	90.00	102.00	7.00	12.00	PU	WPH-1920
W130906501	90.00	102.60	6.70	8.75	FKM	WPS-3630
W130906709	90.00	104.00	8.00	11.00	FKM	WPS-5253
W130906713	90.00	105.00	5.00	7.00	FKM	WPS-6988

Bold sizes are readily available in stock.
Other materials are available on request.

W13

Heavy Duty Wiper Seal

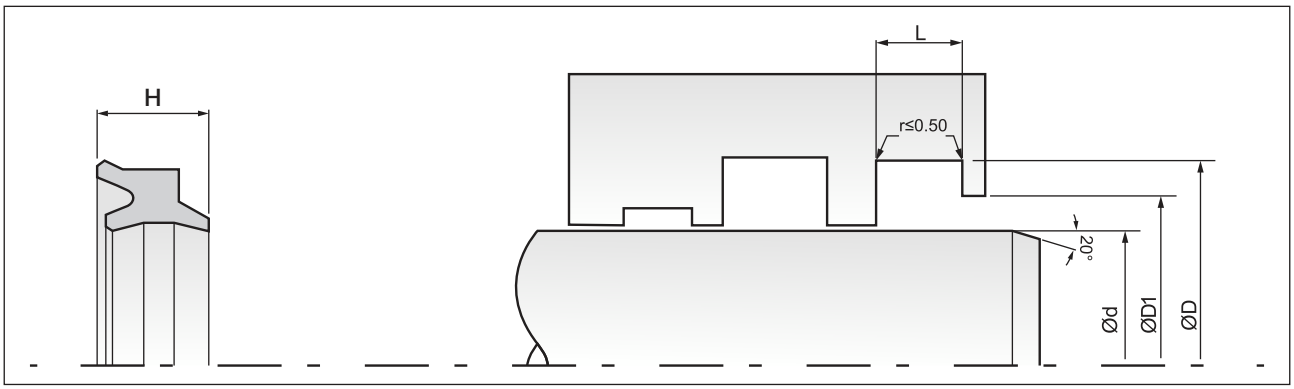

Part No.	d (f8)	D (H9)	L (+0.2)	H	Matl.	Mould No.
W130906708	90.00	110.00	6.00	8.00	FKM	WPS-5048
W13095L501	95.00	107.00	7.00	12.00	PU	WPH-1921
W130951101	95.00	115.00	6.00	9.00	NBR	WPS-5223
W130985901	98.00	106.00	4.50	6.70	PU	WPH-111
W13100L501	100.00	108.00	6.00	8.00	PU	WPH-925
W13100L504	100.00	110.00	6.00	7.00	PU	WPH-1340
W131001103	100.00	110.00	6.00	8.00	NBR	WPS-1294
W13100L503	**100.00**	**110.00**	**6.00**	**8.00**	**PU**	**WPH-1057**
W131006703	100.00	110.00	6.00	9.50	FKM	WPS-4824
W131006501	100.00	110.00	6.00	10.00	FKM	WPS-4517
W131006701	100.00	110.00	6.50	8.00	FKM	WPS-2240
W131001102	100.00	110.00	6.50	8.00	NBR	WPS-2426
W131006704	100.00	110.00	7.00	10.00	FKM	WPS-6560
W13100L507	100.00	112.00	7.00	10.00	PU	WPH-1680
W131001105	100.00	112.50	10.00	14.50	NBR	WPS-6931
W13100R301	100.00	114.00	6.00	12.00	PU	WPH-1101
W13100L508	100.00	115.00	7.50	9.50	PU	WPH-2153
W131006702	100.00	115.00	8.00	10.00	FKM	WPS-3216
W13100L506	100.00	115.00	8.50	10.50	PU	WPH-2106
W13100L502	100.00	120.00	8.00	10.00	PU	WPH-1029
W131001104	100.00	120.00	10.00	15.00	NBR	WPS-6322
W13101L501	101.60	114.30	6.00	8.89	PU	WPH-2173
W131016601	101.60	114.30	6.70	8.80	FKM	WPS-4779
W131015901	101.60	114.30	7.00	10.00	PU	WPH-609
W131016701	101.60	116.60	8.00	10.00	FKM	WPS-3230
W13105L502	105.00	115.00	5.50	9.00	PU	WPH-2333
W131056701	105.00	115.00	6.00	8.00	FKM	WPS-1792
W131051103	105.00	115.00	6.00	8.00	NBR	WPS-3602
W13105L501	105.00	120.00	7.24	10.00	PU	WPH-1854
W131091101	109.50	130.00	10.00	15.00	NBR	WPS-2586
W131106711	110.00	120.00	5.50	8.00	FKM	WPS-7300
W131106709	110.00	120.00	6.00	8.00	FKM	WPS-6014
W131101101	110.00	120.00	6.00	8.00	NBR	WPS-6320
W13110L504	110.00	120.00	6.00	8.00	PU	WPH-1506
W13110L506	110.00	120.00	6.00	8.00	PU	WPH-1685
W131101102	110.00	120.00	6.00	9.50	NBR	WPS-7034
W13110L509	110.00	120.00	6.00	9.50	PU	WPH-2009
W131106703	110.00	120.00	9.50	11.50	FKM	WPS-1824
W131104601	110.00	120.00	10.00	14.00	VMQ	WPS-6123
W131106708	110.00	122.00	5.00	8.00	FKM	WPS-5553
W13110L507	110.00	122.00	6.00	8.00	PU	WPH-1807
W131106706	110.00	122.00	7.00	8.00	FKM	WPS-5547
W131106707	110.00	122.00	7.00	12.00	FKM	WPS-5554
W13110L502	110.00	125.00	6.00	8.00	PU	WPH-1292
W13110R301	110.00	125.00	7.50	9.50	PU	WPH-1657
W13110L501	**110.00**	**125.00**	**8.00**	**11.00**	**PU**	**WPH-1058**
W131105903	110.00	125.00	8.00	12.00	PU	WPH-680
W131106705	110.00	125.00	8.00	12.00	FKM	WPS-3649
W131106704	110.00	125.00	8.50	9.50	FKM	WPS-4567
W13110L503	110.00	125.00	8.50	10.00	PU	WPH-1341
W131106710	110.00	125.00	8.50	13.00	FKM	WPS-6460
W13110L510	110.00	130.00	10.00	13.00	PU	WPH-2511

Part No.	d (f8)	D (H9)	L (+0.2)	H	Matl.	Mould No.
W131120901	112.00	124.00	5.90	7.90	NBR	WPS-7201
W131121101	112.00	128.00	8.00	12.00	NBR	WPS-5754
W131141101	114.30	127.00	5.50	6.74	NBR	WPS-3496
W13115D601	115.00	127.00	7.00	12.00	HNBR	WPS-5232
W13115L501	115.00	127.00	7.00	12.00	PU	WPH-1922
W131175901	117.00	127.00	5.50	8.35	PU	WPH-110
W131206702	120.00	130.00	7.00	10.00	FKM	WPS-7209
W131206701	120.00	132.00	7.00	12.00	FKM	WPS-5158
W13120L501	120.00	132.00	8.00	10.00	PU	WPH-711
W13120L502	**120.00**	**135.00**	**8.00**	**11.00**	**PU**	**WPH-1059**
W131200901	120.00	135.00	8.50	10.00	NBR	WPS-3550
W13120L503	120.65	133.35	6.00	8.89	PU	WPH-2174
W131256702	125.00	137.50	8.00	12.00	FKM	WPS-5868
W131256705	125.00	138.00	7.00	9.50	FKM	WPS-6948
W131256703	125.00	140.00	8.00	9.50	FKM	WPS-6115
W131256704	125.00	140.00	8.50	13.00	FKM	WPS-6461
W13125L502	125.00	141.00	8.00	11.00	PU	WPH-2255
W13125L503	125.00	145.00	10.00	14.00	PU	WPH-2577
W13127L501	127.00	137.00	5.50	9.00	PU	WPH-2336
W131276704	127.00	138.00	6.00	9.00	FKM	WPS-6365
W131276703	127.00	139.60	7.00	9.00	FKM	WPS-5439
W131276702	127.00	141.00	6.80	10.00	FKM	WPS-2536
W13129L501	129.00	144.00	7.24	10.00	PU	WPH-1853
W131301102	130.00	142.00	7.50	10.00	NBR	WPS-5410
W13130L501	130.00	145.00	7.50	8.50	PU	WPH-2107
W131301101	130.00	145.00	8.00	10.00	NBR	WPS-4034
W13130101	130.00	150.00	10.00	11.00	NBR	WPS-7039
W131306701	130.50	157.00	16.50	21.50	FKM	WPS-6866
W131365901	136.00	146.00	5.50	8.35	PU	WPH-109
W13136L501	**136.00**	**146.00**	**5.50**	**8.35**	**PU**	**WPH-1060**
W131396703	139.00	165.00	8.00	12.00	FKM	WPS-3845
W13139L501	139.70	152.40	6.00	8.89	PU	WPH-2172
W131396701	139.70	152.40	6.50	8.50	FKM	WPS-2918
W131396704	139.70	153.19	7.00	9.00	FKM	WPS-6180
W13140L501	140.00	153.00	7.00	9.50	PU	WPH-857
W13140L503	140.00	155.00	6.00	9.00	PU	WPH-1155
W131406701	140.00	155.00	7.50	9.50	FKM	WPS-3431
W13140L502	**140.00**	**155.00**	**8.50**	**9.50**	**PU**	**WPH-1061**
W131406706	140.00	155.00	8.50	10.00	FKM	WPS-6729
W131406702	140.00	155.00	9.00	12.00	FKM	WPS-3841
W131406705	140.00	156.30	8.00	10.00	FKM	WPS-5563
W131406703	140.00	160.00	7.00	13.00	FKM	WPS-4823
W131466701	146.05	158.75	7.00	9.00	FKM	WPS-7470
W13147L501	147.00	157.00	5.50	9.00	PU	WPH-2335
W13150L504	150.00	160.00	7.00	9.50	PU	WPH-1153
W13150L501	150.00	162.00	7.00	12.00	PU	WPH-924
W131506701	150.00	165.00	8.00	11.00	FKM	WPS-6710
W13150L503	**150.00**	**165.00**	**8.00**	**11.00**	**PU**	**WPH-1062**
W13150L505	150.00	165.00	8.00	11.00	PU	WPH-2001
W131501101	150.00	165.00	8.00	11.00	NBR	WPS-6934
W13150L502	150.00	165.00	10.00	16.00	PU	WPH-923
W13152L501	152.00	167.00	7.24	10.60	PU	WPH-1855

Bold sizes are readily available in stock.
Other materials are available on request.

W13

Heavy Duty Wiper Seal

MAX SPARE LIMITED
QUALITY. PRECISION. SPEED.

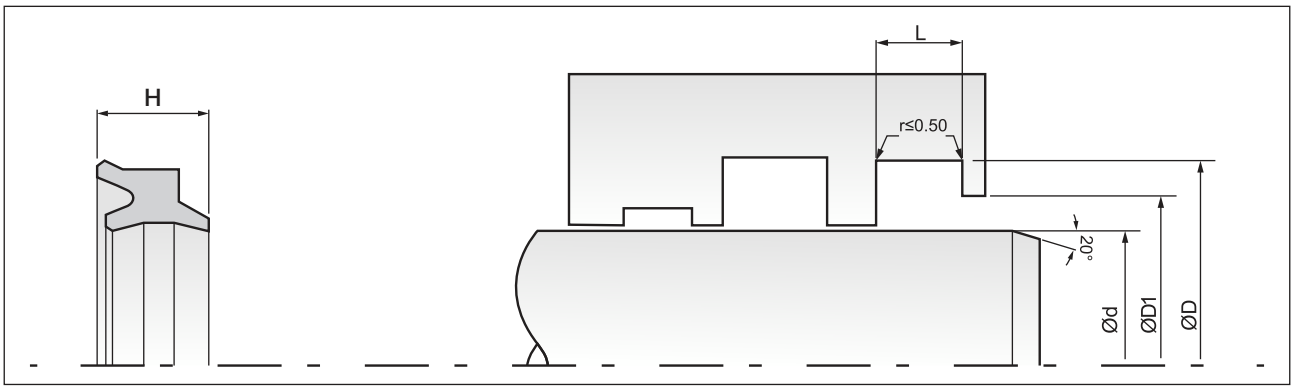

Part No.	d (f8)	D (H9)	L (+0.2)	H	Matl.	Mould No.
W13152S401	152.40	165.10	6.99	8.92	HNBR	WPS-7096
W131555901	155.00	165.00	5.50	8.35	PU	WPH-108
W13155L501	**155.00**	**165.00**	**5.50**	**8.35**	**PU**	**WPH-1066**
W13155D601	155.00	167.00	7.00	12.00	HNBR	WPS-5231
W131606703	160.00	172.00	7.00	9.50	FKM	WPS-3782
W131606707	160.00	172.00	8.00	11.00	FKM	WPS-6692
W13160L501	160.00	174.00	7.00	9.50	PU	WPH-952
W13160L502	**160.00**	**175.00**	**8.00**	**11.00**	**PU**	**WPH-1063**
W131606702	160.00	175.00	8.20	9.50	FKM	WPS-3427
W131606705	160.00	175.00	8.50	9.50	FKM	WPS-6480
W131606706	160.00	175.00	9.20	13.00	FKM	WPS-6558
W131606701	160.00	175.00	9.50	11.00	FKM	WPS-2987
W131606704	160.00	185.00	12.00	20.00	FKM	WPS-5363
W13161L501	161.92	174.62	6.00	8.89	PU	WPH-2171
W13167L501	167.00	177.00	5.50	9.00	PU	WPH-2334
W13170L501	170.00	185.00	8.00	11.00	PU	WPH-2825
W131701001	170.00	185.00	15.00	16.00	NBR	WPS-7492
W13171P501	171.45	184.02	7.13	8.91	NBR	WPS-7248
W131751102	175.00	190.00	10.00	16.00	NBR	WPS-2857
W13176L501	**176.00**	**186.00**	**5.50**	**8.35**	**PU**	**WPH-1064**
W131765901	176.00	186.00	5.50	8.35	PU	WPH-107
W131771101	177.80	190.20	6.20	7.70	NBR	WPS-4582
W131776701	177.80	190.50	6.35	7.50	FKM	WPS-2921
W131806704	180.00	192.50	7.00	10.00	FKM	WPS-6513
W131806701	180.00	193.00	7.00	9.50	FKM	WPS-2501
W131801101	180.00	193.00	7.00	9.50	NBR	WPS-6784
W13180L502	180.00	195.00	7.24	10.00	PU	WPH-2177
W13180L501	**180.00**	**195.00**	**8.00**	**11.00**	**PU**	**WPH-1065**
W131806703	180.00	195.00	8.50	12.00	FKM	WPS-6381
W13184R301	184.15	203.20	8.89	12.70	PU	WPH-1602
W13185L502	185.00	200.00	8.00	11.00	PU	WPH-1884
W13188L501	188.00	198.00	5.50	9.00	PU	WPH-2330
W13190L501	190.00	200.00	5.00	7.00	PU	WPH-2850
W131906701	190.00	203.00	7.00	9.50	FKM	WPS-6382
W13196L501	196.00	208.00	8.20	11.00	PU	WPH-1582
W132006703	200.00	212.00	8.30	11.00	FKM	WPS-5404
W132006705	200.00	213.50	8.00	10.00	FKM	WPS-7122
W13200L502	**200.00**	**214.00**	**7.00**	**9.50**	**PU**	**WPH-856**
W132006701	200.00	214.00	8.00	9.50	FKM	WPS-1525
W132006702	200.00	215.00	7.00	10.00	FKM	WPS-5276
W132006704	200.00	215.00	8.50	12.00	FKM	WPS-6458
W13200L503	200.00	216.00	9.14	14.04	PU	WPH-1863
W132001101	200.00	220.00	10.00	18.00	NBR	WPS-7279
W132006601	200.00	225.00	7.00	10.00	FKM	WPS-2535

Part No.	d (f8)	D (H9)	L (+0.2)	H	Matl.	Mould No.
W13203501	203.20	215.77	6.98	8.91	PU	WPH-2033
W132036701	203.20	215.90	6.60	8.00	FKM	WPS-5455
W132031201	203.20	215.90	7.00	10.00	NBR	WPS-7356
W132036702	203.20	215.90	8.00	12.00	FKM	WPS-7139
W132101102	210.00	223.00	7.00	9.50	NBR	WPS-6271
W13212L501	212.00	227.00	7.24	10.00	PU	WPH-2176
W132206601	220.00	240.00	7.00	13.00	FKM	WPS-2239
W132256701	225.00	238.00	8.00	11.00	FKM	WPS-7281
W132506704	250.00	262.00	6.00	9.00	FKM	WPS-5181
W13250L501	250.00	266.00	12.00	15.00	PU	WPH-1342
W132506702	250.00	270.00	10.00	18.00	FKM	WPS-2396
W132501102	250.00	270.00	10.00	18.00	NBR	WPS-6909
W132501101	250.00	275.00	16.00	22.50	NBR	WPS-6044
W132506703	250.00	275.00	16.00	22.50	FKM	WPS-4870
W13260L501	260.00	286.00	11.50	17.10	PU	WPH-2046
W132656701	265.00	279.00	8.00	11.00	FKM	WPS-5840
W132801101	280.00	295.00	7.50	9.50	NBR	WPS-4575
W132806702	280.00	297.00	8.00	16.00	FKM	WPS-5643
W132806703	280.00	298.00	9.00	14.00	FKM	WPS-7312
W132806701	280.00	305.00	16.00	22.50	FKM	WPS-2327
W132903501	290.00	305.00	9.00	11.50	EPDM	WPS-6263
W13300L501	300.00	316.00	10.00	18.00	PU	WPH-670
W133001102	300.00	320.00	9.00	14.00	NBR	WPS-6270
W133001101	300.00	325.00	16.00	22.50	NBR	WPS-3571
W133166601	316.50	348.00	20.00	24.00	FKM	WPS-5914
W13320L501	320.00	350.00	18.00	27.00	PU	WPH-1449
W133301102	330.00	345.00	9.50	13.00	NBR	WPS-2372
W133351101	335.00	365.00	17.50	27.00	NBR	WPS-2371
W133401101	340.00	369.00	9.00	15.00	NBR	WPS-5852
W13355L501	355.00	375.00	9.00	14.00	PU	WPH-2473
W133601101	360.00	375.00	7.50	9.50	NBR	WPS-4576
W133601102	360.00	390.00	18.00	27.00	NBR	WPS-6634
W134001102	400.00	415.00	7.50	9.50	NBR	WPS-4578
W134001101	400.00	430.00	17.00	27.00	NBR	WPS-1290
W134201101	420.00	438.00	7.00	15.00	NBR	WPS-3142
W134601101	460.00	475.00	6.70	9.50	NBR	WPS-7048
W135001101	500.00	530.00	17.50	27.00	NBR	WPS-2499
W135601101	560.00	595.00	17.00	28.00	NBR	WPS-7164
W135801103	580.00	610.00	18.00	27.00	NBR	WPS-933
W137401101	740.00	770.00	18.00	27.00	NBR	WPS-4478
W137801101	780.00	810.00	17.50	27.00	NBR	WPS-5533
W139991103	1073.00	1100.00	18.00	27.00	NBR	SLO-455
W1312801101	1280.00	1310.00	18.00	27.00	NBR	SLO-396

Bold sizes are readily available in stock.
Other materials are available on request.

W21

Single Acting Rod Wiper Seal

DETAILS

W21 is single acting rod is dirt wiper with additional sealing lip and bearing segment. The additional sealing lip to prevent the ingress of contaminants to enter in to the system. The wiper lip wipes dirt away and leaves a residual oil film on the retracting rod. The support on the bottom heel prevents twisting in the groove and pressure built up between wiper and seal.

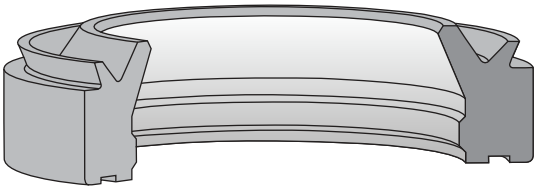

COMPATIBILITY

Mineral oils, bio oils, water soluble & water glycol fluids.

MATERIAL

Polyurethane 92 Shore A

APPLICATION

Earth moving equipment, Industrial valves, Presses, Industrial Vehicles, Injection moulding machines, agricultural machinery.

OPERATING CONDITIONS

Temperature Range : -30°C to + 100°C
Speed : 1.0 m/s

FEATURES

- Good wiping performance.
- General purpose seal.
- Single acting seal.
- Used as heavy duty seal.
- Long service life.
- Simple, easy grooves.
- No twisting in the grooves.

SURFACE ROUGHNESS

Static : 1.6 µmRa
Dynamic : 0.4 µmRa

INSTALLATION & ASSEMBLY

Wiper seal can be easily fitted into the closed grooves by deforming it into kidney shape. The assembly tool must have no sharp edges. The seal must lubricate before installation.

W21

Single Acting Rod Wiper Seal

MAX SPARE LIMITED
QUALITY. PRECISION. SPEED.

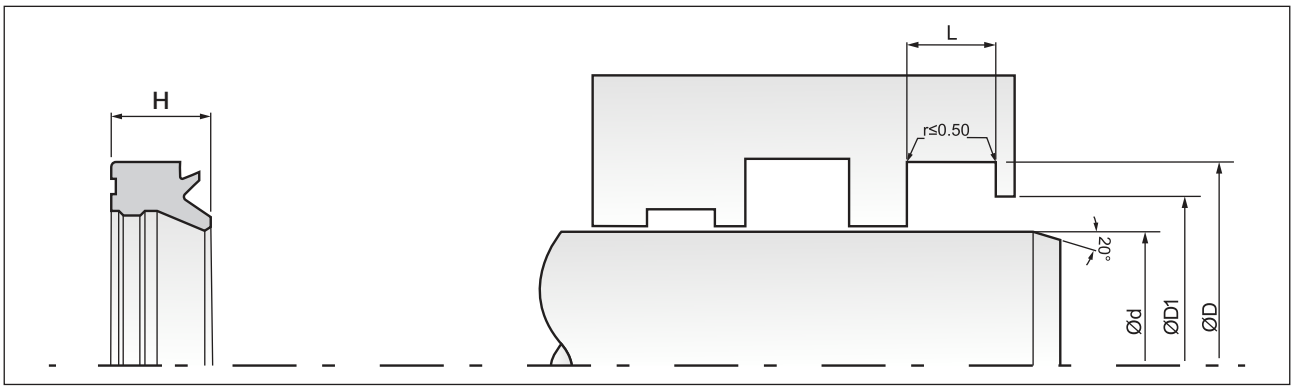

Part No.	d (f8)	D (H9)	D1 (H9)	L (+0.2)	H	Matl.	Mould No.
W21016L501	16.00	24.00	21.50	5.00	7.80	PU	-
W21016L502	16.00	24.00	22.00	4.00	7.00	PU	-
W21018L502	18.00	26.00	23.50	5.00	7.80	PU	-
W21018L501	18.00	26.00	24.00	4.00	7.00	PU	-
W21020L501	20.00	28.00	25.50	5.00	7.80	PU	-
W21020L502	20.00	28.00	26.00	4.00	7.00	PU	-
W21022L502	22.00	30.00	27.50	5.00	7.80	PU	-
W210225901	22.00	30.00	28.00	4.00	7.00	PU	WPH-1803
W21025L502	25.00	33.00	30.50	5.00	7.80	PU	-
W21025L503	25.00	33.00	31.00	4.00	7.00	PU	-
W210268701	26.00	32.00	29.00	3.00	4.30	PU	WPH-237
W21028L501	28.00	36.00	33.50	5.00	7.80	PU	-
W210285901	28.00	36.00	34.00	4.00	7.00	PU	WPH-1804
W210306701	30.00	38.00	36.00	4.00	7.00	FKM	WPS-5536
W210325902	32.00	40.00	37.50	5.00	7.80	PU	WPH-980
W21032L501	32.00	40.00	38.00	4.00	7.00	PU	-
W21035L501	35.00	43.00	41.00	4.00	7.00	PU	-
W21036L501	36.00	44.00	41.50	5.00	7.80	PU	-
W210365901	36.00	44.00	42.00	4.00	7.00	PU	WPH-524
W210388701	38.00	46.00	44.00	4.70	8.00	PU	WPH-1782
W21038L501	38.00	48.00	46.00	5.00	8.00	PU	WPH-656
W210386701	38.00	48.00	46.00	5.00	8.00	FKM	WPS-3381
W210408701	40.00	48.00	46.00	4.00	7.00	PU	WPH-989
W210405904	40.00	48.00	45.50	5.00	7.80	PU	WPH-981
W21042L502	42.00	51.00	46.00	5.00	8.00	PU	WPH-869
W21042L501	42.00	52.00	48.00	5.00	8.00	PU	WPH-658
W21045L505	45.00	53.00	50.50	5.00	7.80	PU	-
W21045L501	45.00	53.00	51.00	4.00	7.00	PU	WPH-635
W21045L502	45.00	55.00	51.00	5.00	8.00	PU	WPH-657
W21050L503	50.00	58.00	55.50	5.00	7.80	PU	-
W210505903	50.00	58.00	56.00	4.00	7.00	PU	WPH-1599
W21055L501	55.00	63.00	61.00	4.00	7.00	PU	-
W21056L502	56.00	64.00	62.00	4.00	7.00	PU	-
W21056L503	56.00	66.00	63.00	6.30	9.00	PU	-
W210606702	60.00	68.00	66.00	4.00	7.00	FKM	WPS-5578
W21060L501	60.00	70.00	67.00	6.30	9.00	PU	-

Part No.	d (f8)	D (H9)	D1 (H9)	L (+0.2)	H	Matl.	Mould No.
W21060L502	60.00	72.00	69.00	5.50	10.00	PU	-
W21063L501	63.00	71.00	69.00	4.00	7.00	PU	-
W21063L502	63.00	73.00	70.00	6.30	9.00	PU	-
W21065R301	65.00	73.00	71.00	4.00	7.00	PU	WPH-1258
W21070L503	70.00	78.00	76.00	4.00	7.00	PU	-
W21070L502	70.00	80.00	77.00	6.30	9.00	PU	-
W21070L504	70.00	82.00	79.00	5.50	10.00	PU	-
W21075L502	75.00	83.00	81.00	4.00	7.00	PU	-
W21080L501	80.00	88.00	86.00	4.00	7.00	PU	-
W210808701	80.00	90.00	87.00	6.30	9.00	PU	WPH-1187
W21080L502	80.00	92.00	89.00	5.50	10.00	PU	-
W21085L501	85.00	93.00	91.00	4.00	7.00	PU	-
W21085L502	85.00	95.00	92.00	6.30	9.00	PU	-
W21090L503	90.00	98.00	96.00	4.00	7.00	PU	-
W21090L502	90.00	100.00	97.00	6.30	9.00	PU	-
W210908702	90.00	102.00	99.00	5.50	10.00	PU	WPH-1371
W21100L501	100.00	108.00	106.00	4.00	7.00	PU	WPH-913
W21100L505	100.00	115.00	110.00	9.50	13.00	PU	-
W21110L401	110.00	122.00	119.00	5.50	10.00	PU	WPH-1655
W211105902	110.00	125.00	120.00	9.50	13.00	PU	WPH-245
W21115L501	115.00	127.00	124.00	5.50	10.00	PU	-
W21120L502	120.00	132.00	129.00	5.50	10.00	PU	-
W21125L502	125.00	137.00	134.00	5.50	10.00	PU	-
W21125L503	125.00	140.00	135.00	9.50	13.00	PU	-
W21130L501	130.00	142.00	139.00	5.50	10.00	PU	-
W211355901	135.00	150.00	145.00	9.50	13.00	PU	WPH-1831
W21140L502	140.00	152.00	149.00	5.50	10.00	PU	-
W21140L503	140.00	155.00	150.00	9.50	13.00	PU	-
W21150L501	150.00	162.00	159.00	5.50	10.00	PU	-
W211606701	160.00	172.00	169.00	5.50	10.00	FKM	WPS-3357
W211605901	160.00	175.00	170.00	9.50	13.00	PU	WPH-348
W21170L501	170.00	182.00	179.00	5.50	10.00	PU	-
W211805901	180.00	192.00	189.00	5.50	10.00	PU	WPH-1331
W21180L501	180.00	195.00	190.00	9.50	13.00	PU	WPH-1344
W21200L502	200.00	212.00	210.00	9.50	13.00	PU	-
W21200L501	200.00	215.00	210.00	9.50	13.00	PU	WPH-1382

Bold sizes are readily available in stock.
Other materials are available on request.

W18

Medium Duty Rod Wiper Seal

DETAILS

W18 is single acting rod wiper seal designed to prevent the ingress of contaminants in to the system where the risk of large accumulation of dirt on the rod like Earth moving equipments, Mining etc. These wipers are designed to fit in to closed grooves. It is made with Polyurethane material with offers high level of stiffness providing the wiper to remove dried mud from the rod.

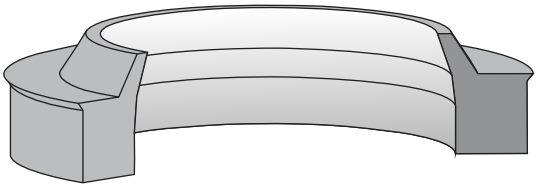

COMPATIBILITY

Mineral oils, bio oils, water soluble & water glycol fluids.

MATERIAL

Polyurethane 95 Shore A

APPLICATION

Earth moving equipment, Industrial valves, Presses, Mining, Support cylinders, Agricultural Machinery.

OPERATING CONDITIONS

Temperature Range : -30°C to + 100°C
Speed : 1.0 m/s

FEATURES

- Good stability.
- Good wiping performance.
- Single acting seal.
- Excellent wear resistance.
- Suitable for closed grooves.
- Long service life.

SURFACE ROUGHNESS

Static : 1.6 µmRa
Dynamic : 0.4 µmRa

INSTALLATION & ASSEMBLY

Wiper seal can be easily fitted into the closed grooves by deforming it into kidney shape. The assembly tool must have no sharp edges. The seal must lubricate before installation.

W18

Medium Duty Rod Wiper Seal

MAX SPARE LIMITED
QUALITY. PRECISION. SPEED.

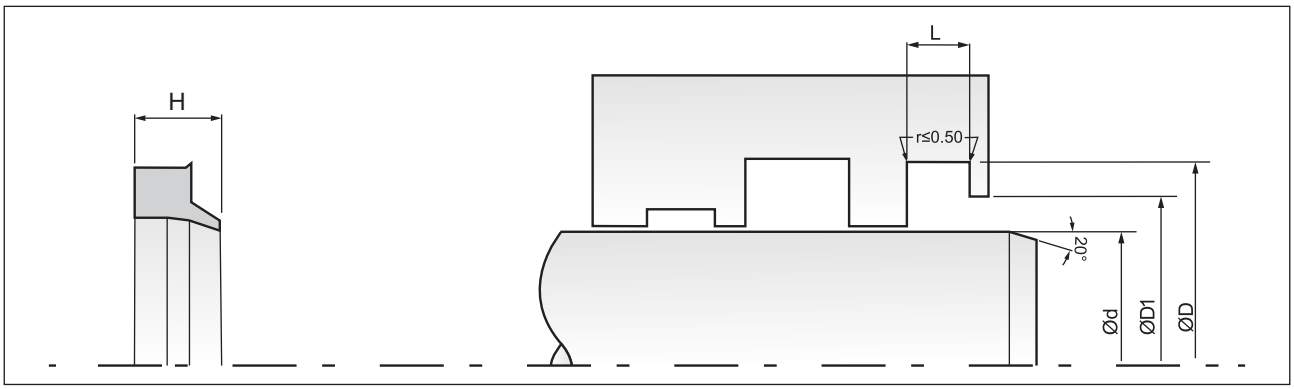

Part No.	d (f8)	D (H9)	L (+0.2)	H	Matl.	Mould No.
W180125901	12.70	19.05	3.00	5.00	PU	WPH-1792
W18012L501	12.70	19.05	3.17	4.74	PU	WPH-1856
W18016L501	16.00	24.60	5.30	7.00	PU	WPH-1232
W180191101	19.05	28.50	4.50	7.00	NBR	WPS-7079
W180195901	19.05	28.57	7.20		PU	WPH-1455
W18020L503	20.00	24.00	2.60	3.50	PU	WPH-2028
W18020L502	20.00	26.00	2.00	3.50	PU	WPH-1750
W18020L501	20.00	28.00	5.00	6.80	PU	WPH-1688
W180205902	20.00	28.60	5.10	7.30	PU	WPH-1268
W180205901	20.00	28.60	5.30	6.50	PU	WPH-2428
W180226702	22.00	28.00	3.00	5.00	FKM	WPS-2514
W180226703	22.00	28.00	3.20	5.50	FKM	WPS-2513
W180226801	22.00	30.00	4.90	7.00	FKM	WPS-7514
W18022L501	22.22	31.75	4.74	7.13	PU	WPH-1857
W18025L502	25.00	31.00	2.00	3.50	PU	WPH-1749
W18025L501	25.00	32.50	5.00	8.50	PU	WPH-1199
W180255901	25.00	33.60	5.10	7.30	PU	WPH-1269
W180268701	26.97	36.50	4.74	7.14	PU	WPH-1496
W180636702	28.00	36.60	4.80	7.00	FKM	WPS-6194
W18028L501	28.00	36.60	5.10	6.60	PU	WPH-1085
W180288701	28.57	38.10	4.50	7.14	PU	WPH-1497
W18028L502	28.57	38.10	4.75	7.14	PU	WPH-1524
W180281101	28.97	36.11	2.40	5.70	NBR	WPS-7223
W180301102	30.00	36.00	4.00	7.00	NBR	WPS-1770
W180318701	31.75	41.27	4.74	7.13	PU	WPH-1547
W180321103	32.00	40.00	5.00	7.00	NBR	WPS-6650
W180325901	32.00	44.00	4.00	7.00	PU	WPH-2805
W18035L501	35.00	43.00	5.00	7.00	PU	WPH-748
W180358701	35.00	43.00	5.75	7.50	PU	WPH-2048
W180351102	35.00	45.00	5.50	8.00	NBR	WPS-5888
W18036L501	36.00	44.00	4.60	7.00	PU	WPH-1466
W180366701	36.00	44.00	5.00	8.00	FKM	WPS-7118
W18036D601	36.00	44.60	5.30	7.00	HNBR	WPS-4931
W180385902	38.00	48.00	4.50	6.00	PU	WPH-1126
W180388701	38.10	47.62	4.74	7.13	PU	WPH-1546
W18040L502	40.00	48.00	4.60	6.50	PU	WPH-2610
W180406701	40.00	48.00	5.00	7.00	FKM	WPS-1687
W18040L501	40.00	48.00	5.00	7.00	PU	WPH-1701
W180405902	40.00	48.60	5.00	8.00	PU	WPH-1404
W180405901	40.00	50.00	5.00	7.00	PU	WPH-691
W180401102	40.00	50.00	5.50	8.08	NBR	WPS-5889
W180401103	40.00	50.00	6.70	9.00	NBR	WPS-5890
W18044L501	44.45	53.90	4.75	7.05	PU	WPH-2674
W18045L501	45.00	53.00	5.00	7.00	PU	WPH-1707
W180455901	45.00	53.00	5.00	8.00	PU	WPH-387
W180491101	49.00	57.60	5.00	7.00	NBR	WPS-4599
W18050L504	50.00	58.00	5.00	7.00	PU	WPH-1756
W18050L503	50.00	58.00	5.00	7.00	PU	WPH-1704
W180505901	50.00	58.00	5.00	8.00	PU	WPH-238
W18050D601	50.00	58.60	5.30	7.00	HNBR	WPS-4926
W18050R301	50.00	60.00	5.00	7.00	PU	WPH-1794
W180506701	50.00	67.00	6.00	10.00	FKM	WPS-4331

Part No.	d (f8)	D (H9)	L (+0.2)	H	Matl.	Mould No.
W180505902	50.80	63.50	6.00	9.52	PU	WPH-2355
W180506703	50.80	63.50	6.35	9.52	FKM	WPS-7445
W180508701	50.80	63.50	6.35	9.52	PU	WPH-1549
W180506702	50.80	63.50	6.35	10.00	FKM	WPS-6378
W18056L501	56.00	66.00	5.00	7.00	PU	WPH-1793
W180566702	56.00	66.00	6.10	8.30	FKM	WPS-5050
W180567901	56.00	66.00	6.30	10.00	NBR	WPH-1697
W18056L502	56.00	66.60	5.00	7.00	PU	WPH-2111
W180566701	56.00	66.60	5.00	7.00	FKM	WPS-3266
W180606701	60.00	70.00	5.30	7.00	FKM	WPS-6220
W18060L501	60.00	70.00	6.00	9.00	PU	WPH-1706
W18060R301	60.00	73.00	5.00	7.00	PU	WPH-1796
W180636701	63.00	71.60	5.30	7.00	FKM	WPS-3568
W18063L501	63.00	73.00	5.00	7.00	PU	WPH-1845
W18063K301	63.00	73.00	6.30	10.00	HYT-2	WPH-1321
W180638701	63.50	76.20	6.35	9.52	PU	WPH-1548
W180636703	63.50	76.20	6.35	9.52	FKM	WPS-7497
W18065L501	65.00	75.00	5.00	7.00	PU	WPH-1757
W18065O501	65.00	75.00	5.00	7.80	HYT-3	WPH-1454
W180651101	65.00	75.00	5.30	7.00	NBR	WPS-5649
W180661101	66.00	76.00	4.00	8.00	NBR	WPS-4456
W18069L501	69.85	82.55	5.20	9.52	PU	WPH-1553
W180701102	70.00	78.60	5.00	7.00	NBR	WPS-6936
W18070K301	70.00	80.00	6.30	10.00	HYT-2	WPH-1312
W18070L501	70.00	80.00	9.00		PU	WPH-572
W180706701	70.00	80.60	5.00	7.00	FKM	WPS-3267
W18070L503	70.00	80.60	5.00	7.00	PU	WPH-2110
W180705902	70.00	80.60	5.30	7.00	PU	WPH-443
W180801101	80.00	88.60	5.30	7.00	NBR	WPS-5426
W180801102	80.00	88.60	5.30	8.00	NBR	WPS-5650
W180806701	80.00	90.00	5.70	8.80	FKM	WPS-5250
W18080K301	80.00	90.00	5.70	8.80	NYLON	WPH-957
W18080O501	80.00	90.00	6.30	10.00	HYT-3	WPH-1618
W180806702	80.00	90.00	7.50	11.00	FKM	WPS-6221
W18080L502	80.00	92.00	6.00	12.00	PU	WPH-2564
W18088L501	88.90	101.60	6.00	9.52	PU	WPH-1551
W180888701	88.90	101.60	6.35	9.52	PU	WPH-1826
W18090L501	90.00	100.00	6.00	10.00	PU	WPH-601
W18090R301	90.00	102.00	7.00	12.00	PU	WPH-1795
W180906701	90.00	102.00	7.00	12.00	FKM	WPS-4638
W18090L505	90.00	102.20	6.50	11.00	PU	WPH-2421
W180907901	90.00	102.20	6.50	11.00	HYT-1	WPH-1681
W18090L502	90.00	102.20	7.00	12.00	PU	WPH-735
W18095K301	95.00	107.20	7.00	12.00	NBR	WPH-707
W180956701	95.00	107.20	7.20	12.00	FKM	WPS-6219
W18095L501	95.00	112.00	7.00	12.00	PU	WPH-996
W180955901	95.25	107.95	6.00	9.52	PU	WPH-2354
W18100L501	100.00	108.00	6.00	9.00	PU	WPH-2011
W181008701	100.00	112.20	6.50	11.00	PU	WPH-341
W18100O501	100.00	115.00	9.50	14.00	HYT-3	WPH-1525
W18101L501	101.60	114.30	6.00	9.52	PU	WPH-1552
W181016701	101.60	114.30	6.00	10.50	FKM	WPS-5029

Bold sizes are readily available in stock.
Other materials are available on request.

MAX SPARE LIMITED
QUALITY. PRECISION. SPEED.

W18

Medium Duty Rod Wiper Seal

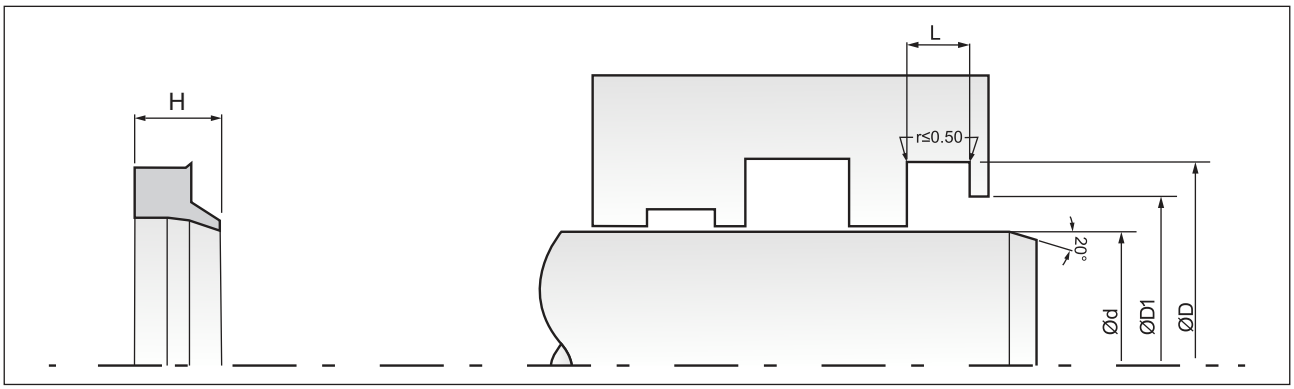

Part No.	d (f8)	D (H9)	L (+0.2)	H	Matl.	Mould No.
W181018701	101.60	114.30	6.35	9.52	PU	WPH-1825
W18107L501	107.95	120.65	6.35	10.03	PU	WPH-2715
W181108702	110.00	122.20	7.20	12.00	PU	WPH-283
W18110L502	110.00	125.00	8.60	13.00	PU	WPH-1867
W181106701	110.00	125.00	9.50	14.00	FKM	WPS-6218
W181115901	111.40	133.35	9.20	14.27	PU	WPH-2845
W181121101	112.00	122.00	6.00	8.00	NBR	WPS-3853
W181145901	114.30	133.35	9.20	14.27	PU	WPH-2828
W18120L501	120.00	132.20	7.00	12.00	PU	WPH-715
W18120L503	120.00	132.20	7.20	12.00	PU	WPH-2634
W181257901	125.00	140.00	9.50	14.00	HYT-1	WPH-1309
W181256701	125.00	140.20	10.10	16.00	FKM	WPS-3569
W181278701	127.00	136.52	5.70	8.50	PU	WPH-2138
W18127L501	127.00	139.70	6.35	9.52	PU	WPH-2096
W181311101	131.00	141.00	5.00	8.00	NBR	WPS-1664
W181406701	140.00	153.00	7.00	9.50	FKM	WPS-3854
W181405901	140.00	155.00	6.00	8.90	PU	WPH-986
W181405902	140.00	155.00	6.80	10.50	PU	WPH-1080
W18140O501	140.00	155.00	9.50	14.00	HYT-3	WPH-1482
W18140L501	140.00	155.00	110.00	16.00	PU	WPH-430
W181406401	140.00	155.10	9.70	16.00	FKM	WPS-4684
W18150K301	150.00	162.20	7.70	12.00	HYT-2	WPH-1608
W18150L501	150.00	176.00	14.00	19.00	PU	WPH-2687
W181605902	160.00	173.00	7.00	9.50	PU	WPH-1140
W181605901	160.00	175.00	9.00	14.00	PU	WPH-1035
W181607901	160.00	175.00	9.50	13.00	HYTREL	WPH-2352
W181606601	160.00	175.00	9.50	16.00	FKM	WPS-4788
W18160L502	160.00	175.00	10.20	16.00	PU	WPH-2389

Part No.	d (f8)	D (H9)	L (+0.2)	H	Matl.	Mould No.
W18160L501	160.00	185.00	14.00	19.00	PU	WPH-2328
W181705901	170.00	182.20	7.50	12.00	PU	WPH-1370
W18170L501	170.00	190.00	14.00	19.00	PU	WPH-1907
W181711101	171.00	183.00	6.00	8.00	NBR	WPS-4600
W181806701	180.00	195.00	8.50	13.00	FKM	WPS-4873
W181807901	180.00	195.00	9.00	14.00	HYT	WPH-101
W18180R301	180.00	200.00	10.20	18.00	PU	WPH-1797
W181856701	185.00	200.00	4.00	7.00	FKM	WPS-5123
W181971101	197.00	209.00	6.00	8.00	NBR	WPS-4601
W18200L501	200.00	215.00	9.50	14.00	PU	WPH-2745
W18202K301	202.00	221.05	9.50	18.00	HYT	WPH-2076
W182106701	210.00	230.20	10.20	16.00	FKM	WPS-3570
W182206601	220.00	240.00	10.20	18.00	FKM	WPS-4787
W18230L501	230.00	246.00	7.00	11.00	PU	WPH-2175
W182315901	231.00	241.60	5.50	7.00	PU	WPH-1183
W182405901	240.00	260.00	10.20	18.00	PU	WPH-1460
W18240L501	240.00	266.00	14.00	19.00	PU	WPH-1871
W182505901	250.00	270.00	10.20	18.00	PU	WPH-2542
W18250R301	250.00	275.00	12.20	18.30	PU	WPH-1702
W18260L501	260.00	286.00	14.00	19.05	PU	WPH-2327
W182805902	280.00	300.00	9.50	19.00	PU	WPH-2581
W182805901	280.00	300.00	10.20	16.00	PU	WPH-1464
W183101101	310.00	330.00	10.00	18.00	NBR	WPS-6332
W18310L501	310.00	336.00	14.00	19.05	PU	WPH-2326
W183596701	359.00	380.00	11.50	16.00	FKM	WPS-5853
W18360L501	360.00	376.00	11.50	18.00	PU	WPH-886
W187501101	750.00	775.00	12.50	20.00	NBR	WPS-6302

Bold sizes are readily available in stock.
Other materials are available on request.

W17

Medium Duty Rod Wiper Seal

DETAILS

W17 wiper series are installed in open grooves. The steel cage firmly holds the wiper in grooves. The standard material for this wiper is Nitrile rubber. We can also supply in Polyurethane material, due to excellent wear resistance of polyurethane the life expected is 3 times than that of NBR.

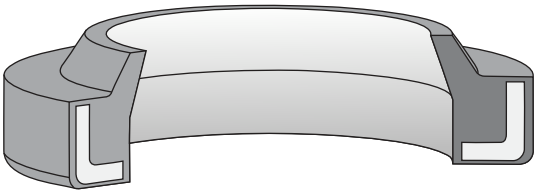

COMPATIBILITY

Mineral oils, bio oils, water soluble & water glycol fluids.

MATERIAL

Nitrile Rubber 85/90 Shore A

APPLICATION

- Medium duty applications.
- Hydraulic and Pneumatic cylinders.

OPERATING CONDITIONS

Temperature Range : -30°C to + 100°C
Speed : 0.5 m/s

FEATURES

- General purpose seal.
- Can be subjected to heavy duty.
- Long service life.
- Suitable for open grooves.

SURFACE ROUGHNESS

Static : 1.6 µmRa
Dynamic : 0.4 µmRa

INSTALLATION & ASSEMBLY

W14 seals are press fit into axially open grooves. The fitting tool must have no sharp edges. The seal must lubricate before installation.

W17

Medium Duty Rod Wiper Seal

MAX SPARE LIMITED
QUALITY. PRECISION. SPEED.

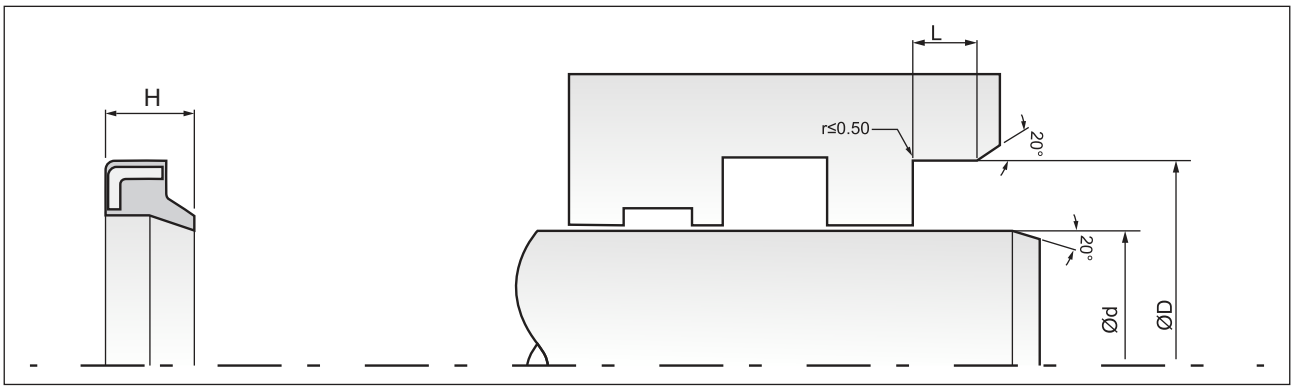

Part No.	d (f8)	D (H9)	L (+0.2)	H	Matl.	Mould No.
W170081102	8.00	14.00	3.50	5.00	NBR	WPS-3872
W170081104	8.00	14.00	4.00	5.00	NBR	WPS-4996
W170081001	8.00	14.00	5.00	7.00	NBR	WPS-3375
W170081103	8.00	14.00	3.50	5.00	NBR	WPS-4886
W170101107	10.00	14.30	4.00	6.00	NBR	WPS-6905
W17010V301	10.00	16.00	3.00	5.00	NBR	WPS-4360
W170100801	10.00	16.00	3.50	5.00	NBR	WPS-5757
W170101105	10.00	16.00	4.00	5.00	NBR	WPS-3780
W170101106	10.00	16.00	5.00	6.50	NBR	WPS-6847
W170121101	12.00	18.00	3.50	5.00	NBR	WPS-3668
W170121003	12.00	18.00	3.50	5.00	NBR	WPS-3376
W17012L501	12.00	18.00	3.50	5.00	PU	WPH-626
W170126701	12.00	18.00	3.50	5.00	FKM	WPS-6925
W170125902	12.00	18.00	3.50	5.00	PU	WPH-1261
W170121110	12.00	18.00	3.50	5.00	NBR	WPS-6552
W170121104	12.00	18.00	4.00	5.00	NBR	WPS-3781
W170121111	12.00	18.00	5.00	6.50	NBR	WPS-6845
W170125901	12.00	20.00	4.00	6.00	PU	WPH-1120
W170121105	12.00	20.00	6.00	8.50	NBR	WPS-6025
W170121113	12.00	22.00	5.00	8.00	NBR	WPS-7241
W170121106	12.00	22.50	5.00	7.50	NBR	WPS-6531
W170121103	12.70	17.54	3.00	4.20	NBR	WPS-3476
W170156701	15.00	21.00	3.50	5.00	FKM	WPS-4342
W170150801	15.00	21.00	3.50	5.00	NBR	WPS-5758
W170151101	15.00	21.00	4.00	5.00	NBR	WPS-5967
W170155901	15.00	25.00	5.00	8.00	PU	WPH-1180
W170151102	15.50	39.00	7.50	14.00	NBR	WPS-6957
W170151001	15.87	22.00	3.00	4.00	NBR	WPS-875
W170166704	16.00	22.00	3.00	5.00	FKM	WPS-7044
W170161109	16.00	22.00	3.00	5.00	NBR	WPS-6849
W170165902	16.00	22.00	3.30	5.00	PU	WPH-1181
W170161107	16.00	22.00	3.50	5.00	NBR	WPS-6295
W170161104	16.00	22.00	4.00	5.00	NBR	WPS-3343
W170161106	16.00	22.00	4.30	6.70	NBR	WPS-5600
W170161108	16.00	22.00	4.50	6.50	NBR	WPS-6846
W170161105	16.00	26.00	4.00	5.00	NBR	WPS-3393
W170166702	16.00	26.00	5.00	7.00	FKM	WPS-6904
W17016U201	16.00	26.00	5.00	8.00	FKM	WPS-4580
W170165901	16.00	26.00	5.00	8.00	PU	WPH-934
W170175901	17.00	23.00	5.00	7.00	PU	WPH-1240
W170181102	18.00	24.00	4.00	6.00	NBR	WPS-4074
W170185902	18.00	28.00	5.00	7.00	PU	WPH-1182
W170181101	18.00	28.00	5.50	7.00	NBR	WPS-3342
W170181104	18.00	28.00	6.00	8.00	NBR	WPS-7360
W170181103	18.00	28.00	7.00	10.00	NBR	WPS-6800
W170185901	18.00	28.00	10.00		PU	WPH-389
W170191101	19.00	29.00	5.50	7.00	NBR	WPS-6797
W170191001	19.05	26.00	5.00	8.90	NBR	WPS-874
W170201107	20.00	27.70	6.20	8.80	NBR	WPS-6834
W170205901	20.00	28.00	3.20	5.00	PU	WPH-1227
W17020L503	20.00	28.00	3.50	5.00	PU	WPH-2629
W170201108	20.00	28.00	5.50	8.00	NBR	WPS-6848

Part No.	d (f8)	D (H9)	L (+0.2)	H	Matl.	Mould No.
W170204301	20.00	29.00	5.00	7.30	VMQ	WPS-7442
W170201106	20.00	30.00	3.50	5.00	NBR	WPS-5910
W170201105	20.00	30.00	5.00	7.00	NBR	WPS-3158
W17020L501	20.00	30.00	5.00	7.00	PU	WPH-893
W17020U201	20.00	30.00	5.00	8.00	FKM	WPS-1189
W170201103	20.00	30.00	5.50	7.00	NBR	WPS-4332
W17020L502	20.00	30.00	7.00	10.00	PU	WPH-942
W170201104	20.00	30.00	7.00	10.00	NBR	WPS-4046
W1702001102	20.00	30.00	7.50	10.00	NBR	WPS-2858
W170206701	20.00	35.00	5.00	7.00	FKM	WPS-4487
W170225901	22.00	32.00	5.00	7.00	PU	WPH-1131
W170221103	22.00	32.00	5.00	7.00	NBR	WPS-7207
W170221102	22.00	32.00	5.50	7.00	NBR	WPS-3344
W170226701	22.00	35.00	5.00	7.00	FKM	WPS-4488
W170231101	23.00	32.00	5.50	6.80	NBR	WPS-4621
W170255902	25.00	32.00	5.00	7.00	PU	WPH-1037
W170251105	25.00	33.70	5.40	8.20	NBR	WPS-6818
W170250802	25.00	35.00	5.00	7.00	NBR	WPS-5756
W17025L501	25.00	35.00	5.00	7.00	PU	WPH-914
W170256701	25.00	35.00	5.00	7.00	FKM	WPS-4178
W170250801	25.00	35.00	5.00	8.00	NBR	WPS-5433
W170251103	25.00	35.00	5.50	7.00	NBR	WPS-3345
W17025L401	25.00	35.00	5.50	8.50	PU	WPH-2442
W170256703	25.00	35.00	7.00	9.50	FKM	WPS-7272
W170255901	25.00	35.00	7.00	10.00	PU	WPH-785
W170251104	25.00	35.00	7.00	10.00	NBR	WPS-4047
W170251102	25.00	37.00	6.00	9.00	NBR	WPS-2441
W170256702	25.00	62.00	5.00	7.00	FKM	WPS-4468
W170281101	28.00	33.00	5.00	7.50	NBR	WPS-3253
W170286701	28.00	35.00	5.00	7.00	FKM	WPS-7163
W170281102	28.00	38.00	5.50	7.00	NBR	WPS-3341
W170305905	30.00	38.00	5.00	7.00	PU	WPH-2593
W170301105	30.00	39.70	6.20	8.80	NBR	WPS-6819
W17030L502	30.00	40.00	5.00	7.00	PU	WPH-915
W170301101	30.00	40.00	5.00	7.00	NBR	WPS-6048
W170305902	30.00	40.00	5.00	8.00	PU	WPH-1198
W170301102	30.00	40.00	5.50	7.00	NBR	WPS-3146
W170301106	30.00	40.00	6.00	10.00	NBR	WPS-6844
W17030L401	30.00	40.00	6.50	9.50	PU	WPH-2443
W170301103	30.00	40.00	7.00	10.00	NBR	WPS-4048
W170305903	30.00	40.00	7.00	10.00	PU	WPH-905
W170306701	30.00	42.00	6.00	10.00	FKM	WPS-6050
W170306701	30.00	42.00	6.00	10.00	FKM	WPS-6072
W170301104	30.00	48.00	5.00	10.00	NBR	WPS-4883
W170320801	32.00	35.00	2.50	3.20	NBR	WPS-5085
W170321102	32.00	40.00	6.00	9.00	NBR	WPS-6610
W170326701	32.00	42.00	5.00	7.00	FKM	WPS-4489
W170321101	32.00	42.00	5.50	7.00	NBR	WPS-3463
W170325901	32.00	42.00	7.00	10.00	PU	WPH-681
W170325902	32.00	42.00	7.00	10.00	PU	WPH-2636
W170341101	34.92	57.15	9.52	12.70	NBR	WPS-4424
W170351101	35.00	42.00	5.30	8.30	NBR	WPS-3254

Bold sizes are readily available in stock.
Other materials are available on request.

W17

Medium Duty Rod Wiper Seal

MAX SPARE LIMITED
QUALITY. PRECISION. SPEED.

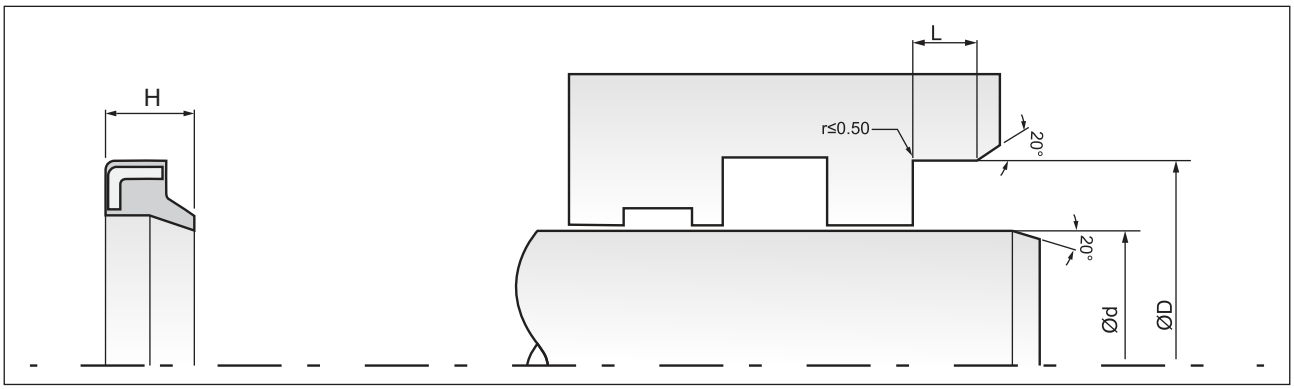

Part No.	d (f8)	D (H9)	L (+0.2)	H	Matl.	Mould No.
W170355901	35.00	45.00	7.00	10.00	PU	WPH-704
W170351103	35.00	45.00	7.00	10.00	NBR	WPS-3964
W170351102	35.00	45.00	7.50	10.00	NBR	WPS-3346
W170360801	36.00	42.25	3.30	8.00	NBR	WPS-5412
W170365901	36.00	45.00	7.00	10.00	PU	WPH-1204
W170361101	36.00	45.00	7.00	10.00	NBR	WPS-3434
W170365902	36.00	46.00	4.80	7.00	PU	WPH-1457
W17036L502	36.00	46.00	5.00	7.00	PU	WPH-1435
W170366701	36.00	46.00	5.00	7.00	FKM	WPS-5434
W17036L501	36.00	46.00	7.00	10.00	PU	WPH-964
W170361102	36.00	46.00	7.00	10.00	NBR	WPS-7410
W170370801	37.00	40.00	2.80	3.20	NBR	WPS-5086
W170371101	37.00	47.00	5.00	7.00	NBR	WPS-3183
W170381101	38.00	48.00	7.00	10.00	NBR	WPS-3162
W170381102	38.00	49.70	6.20	9.00	NBR	WPS-6817
W170381103	38.00	50.00	6.00	8.50	NBR	WPS-6843
W170400801	40.00	50.00	5.00	8.00	NBR	WPS-5759
W170406701	40.00	50.00	7.00	10.00	FKM	WPS-4297
W170405902	40.00	50.00	7.00	10.00	PU	WPH-1132
W170406702	40.00	52.00	5.00	7.00	FKM	WPS-4490
W170405901	40.00	52.00	5.00	8.00	PU	WPH-1133
W170421101	42.00	52.00	7.00	10.00	NBR	WPS-3014
W170425901	42.00	52.00	7.00	10.00	PU	WPH-1221
W17045L502	45.00	55.00	5.00	7.00	PU	WPH-916
W170451102	45.00	55.00	5.00	8.00	NBR	WPS-3948
W170451101	45.00	55.00	5.50	7.00	NBR	WPS-3477
W17045L501	45.00	55.00	7.00	10.00	PU	WPH-832
W170451103	45.00	55.00	7.00	10.00	NBR	WPS-6191
W170451104	45.00	60.00	6.00	9.00	NBR	WPS-7154
W170506701	50.00	60.00	5.00	7.00	FKM	WPS-3228
W170505902	50.00	60.00	5.00	7.00	PU	WPH-1197
W170501101	50.00	60.00	5.00	7.00	NBR	WPS-4510
W170505901	50.00	60.00	5.00	8.00	PU	WPH-1134
W170501102	50.00	60.00	7.00	10.00	NBR	WPS-3168
W170508701	50.00	60.00	7.00	10.00	PU	WPH-1307
W170505904	50.00	60.00	7.00	10.00	PU	WPH-1400
W170501102	50.00	60.00	7.00	10.00	NBR	WPS-2584
W170501103	50.80	63.50	5.50	7.20	NBR	WPS-2800
W17055L501	55.00	65.00	5.00	7.00	PU	WPH-917
W170555901	55.00	65.00	7.00	10.00	PU	WPH-1222
W170566701	56.00	66.00	5.00	7.00	FKM	WPS-4411

Part No.	d (f8)	D (H9)	L (+0.2)	H	Matl.	Mould No.
W170606701	60.00	70.00	5.00	7.00	FKM	WPS-4179
W170605901	60.00	70.00	7.00	10.00	PU	WPH-1103
W170635901	63.00	75.00	7.00	10.00	PU	WPH-1213
W170655901	65.00	75.00	7.00	10.00	PU	WPH-1223
W170651101	65.00	80.00	7.00	10.00	NBR	WPS-4814
W170705901	70.00	80.00	7.00	10.00	PU	WPH-831
W170751101	75.00	83.00	7.00	10.00	NBR	WPS-5407
W170755901	75.00	85.00	7.00	10.00	PU	WPH-1224
W170756701	75.00	85.00	7.00	10.00	FKM	WPS-4737
W170801103	80.00	88.00	7.00	10.00	NBR	WPS-3665
W170805901	80.00	90.00	7.00	10.00	PU	WPH-1214
W1708001104	80.00	90.00	7.00	10.00	NBR	WPS-968
W170855901	85.00	95.00	7.00	10.00	PU	WPH-1225
W170901101	90.00	100.00	5.00	7.00	NBR	WPS-3387
W170901103	90.00	100.00	7.00	10.00	NBR	WPS-5406
W170905901	90.00	100.00	7.00	10.00	PU	WPH-1239
W170905902	90.00	102.20	7.00	12.00	PU	WPH-2376
W170955901	95.00	105.00	7.00	10.00	PU	WPH-1226
W170956601	95.00	105.00	7.00	10.00	FKM	WPS-3377
W171005901	100.00	110.00	7.00	10.00	PU	WPH-1157
W171006601	100.00	110.00	7.00	10.00	FKM	WPS-3988
W171001101	100.00	110.00	7.00	10.00	NBR	WPS-4571
W17101L501	101.60	114.30	6.35	9.52	PU	WPH-2540
W17105L501	105.00	115.00	7.00	10.00	PU	WPH-833
W171105901	110.00	120.00	7.00	10.00	PU	WPH-1228
W17110U201	110.00	120.00	7.00	10.00	FKM	WPS-6502
W171155901	115.00	125.00	7.00	10.00	PU	WPH-1229
W171155902	115.00	127.00	9.00	12.00	NBR	WPH-2518
W171205901	120.00	130.00	7.00	10.00	PU	WPH-1230
W170956702	120.00	130.00	7.00	10.00	FKM	WPS-7335
W17133V301	133.00	152.00	13.00	19.00	NBR	WPS-7354
W171505901	150.00	165.00	9.00	12.00	PU	WPH-1306
W171506601	150.00	165.00	9.00	12.00	FKM	WPS-3989
W171605901	160.00	175.00	12.00	16.00	PU	WPH-2519
W17177L501	177.80	190.60	4.20	7.00	PU	WPH-2599
W171801101	180.00	200.00	8.00	12.50	NBR	WPS-6213
W172256701	225.00	250.00	15.00	20.00	FKM	WPS-7364
W172421101	242.00	280.00	10.00	15.00	NBR	WPS-7245
W173505901	350.00	380.00	12.00	16.00	PU	WPH-1235
W173801101	380.00	408.00	7.00	10.00	NBR	WPS-7244
W174256701	425.00	457.00	19.70	23.00	FKM	WPS-7116

Bold sizes are readily available in stock.
Other materials are available on request.

W38

Heavy Duty Scraper Ring

DETAILS

W38 is a double acting wiper seal with two geometrically different wiping lips suitable for medium to heavy duty hydraulic cylinders with small groove dimensions. It comprises of combination of O-ring energiser and outer seal ring made of PTFE added with a filler to increase the resistance of seal ring to wear & tear. The o-ring energizer provides the force necessary to maintain the pressure of the wiping lips against the sliding surface and allow the wiper to adjust for deflection. Generally, Bronze is used as filler. But, Glass/Graphite filled PTFE can also be made. The Bronze filled PTFE liner seal ring when in contact with the piston rod ensures a stick slip free movement & reduces friction to a

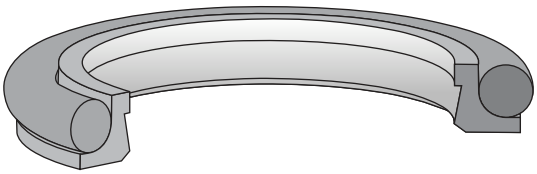

COMPATIBILITY

Mineral oils, bio oils, water soluble & water glycol fluids.

MATERIAL

Sealing Ring: Bronze filled PTFE
O Ring: Nitrile Rubber 70/75 Shore A
FKM 70/75 on request.

APPLICATION

- Medium duty, can also be used with heavy duty cycle applications.
- Indoor type machines.
- Mobile hydraulic, injection machines, industrial equipments.

OPERATING CONDITIONS

Temperature Range : -30°C to + 100°C
(upto 220°C on request)
Speed : 10.0 m/s

FEATURES

- Self-lubricating seal ring.
- Very good scraping effect.
- High surface speed.
- Friction at minimum.
- Compact gland.
- High resistance to media.
- Any size upto 1200 mm available on request.
- Long service life.

SURFACE ROUGHNESS

Static : 1.6 µmRa
Dynamic : 0.4 µmRa

INSTALLATION & ASSEMBLY

Careful fitting is a prerequisite for the correct functioning of the seal. Generally, wipers can be easily fitted by deforming into kidney shape. (Refer to installation procedures of S15 rod seal for more details).

W38

Heavy Duty Scraper Ring

MAX SPARE LIMITED
QUALITY. PRECISION. SPEED.

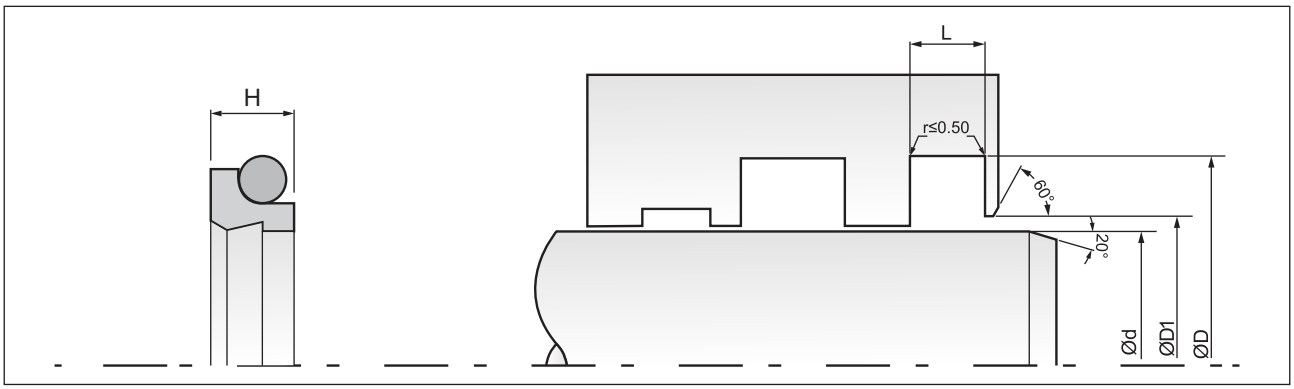

Part No.	d (f8)	D (H9)	L (+0.2)	D1	Matl.	Mould No.
W380036403	3.00	9.00	3.20	4.50	FKM/BFT	WTC-116
W380150803	10.00	14.80	3.70	11.50	NBR/BFT	WTC-317
W380150802	15.00	19.50	3.20	16.50	NBR/BFT	WTC-300
W380166401	16.00	22.80	5.00	17.50	FKM/BFT	WTC-327
W380180804	18.00	24.60	3.40	19.50	NBR/BFT	WTC-246
W380180803	18.00	24.80	5.00	19.50	NBR	WTC-107
W380186401	18.00	24.80	5.00	19.50	FKM/BFT	WTC-305
W380180701	18.70	24.60	5.10	20.20	NBR/BFT	WTC-342
W380206403	20.00	26.50	4.50	21.50	FKM/CAT	WTC-112
W380206406	20.00	26.80	4.50	21.50	FKM/BFT	WTC-329
W380200804	20.00	26.80	5.00	21.50	NBR/BFT	WTC-197
W380206404	20.00	26.80	5.00	21.50	FKM/BFT	WTC-250
W380206405	20.00	27.00	4.60	21.50	CAT	WTC-239
W380200801	20.00	27.60	4.20	21.50	NBR/BFT	WTC-319
W380200803	20.00	29.60	4.20	21.50	NBR/BFT	WTC-139
W380220805	22.00	28.00	3.40	23.50	NBR/BFT	WTC-243
W380226403	22.00	28.80	5.00	23.50	FKM/BFT	WTC-164
W380226402	22.00	28.80	5.10	23.50	FKM/BFT	WTC-142
W380220801	22.00	28.80	5.30	23.50	NBR/BFT	WTC-158
W380226401	22.00	29.00	5.60	23.50	CAT	WTC-200
W380226404	22.00	29.60	4.20	23.50	FKM/BFT	WTC-312
W380220807	22.00	30.00	4.50	23.50	NBR/BFT	WTC-242
W380220808	22.00	30.60	5.00	23.50	NBR/BFT	WTC-244
W38022K203	22.50	29.30	3.80	24.00	FKM+NY	WTC-145
W380246401	24.00	30.00	4.20	25.50	FKM/BFT	WTC-281
W380240801	24.00	30.80	5.00	25.50	NBR/BFT	WTC-341
W380256401	25.00	31.80	4.50	26.50	FKM/BFT	WTC-195
W380257001	**25.00**	**31.80**	**5.00**	**26.50**	**NBR/BFT**	**WTC-147**
W380253201	25.00	31.80	5.00	26.50	BFT	WTC-277
W380250802	25.40	30.22	3.70	26.90	NBR/BFT	WTC-252
W380250801	25.50	31.50	3.30	27.00	NBR/BFT	WTC-225
W380280804	28.00	34.00	6.50	29.50	NBR/PTFE	WTC-162
W380280801	28.00	34.80	5.00	29.50	NBR/BFT	WTC-238
W380286401	28.00	34.80	5.00	29.50	FKM/BFT	WTC-144
W380286402	28.00	35.30	3.20	29.50	FKM/BFT	WTC-141
W380280805	28.00	35.60	4.20	29.50	NBR/BFT	WTC-194
W380287301	28.00	36.80	6.60	29.50	CAT	WTC-204
W380280806	28.60	34.80	3.60	30.10	NBR/BFT	WTC-231
W380307001	30.00	36.20	4.50	31.50	NBR/BFT	WTC-217
W380300802	30.00	36.80	5.00	31.50	NBR/BFT	WTC-218
W380300803	30.00	36.80	5.00	31.50	NBR/PU	WPH-1458
W380300804	30.00	37.00	6.20	31.50	NBR/PTFE	WTC-106
W380300801	30.00	37.60	4.20	31.50	NBR/BFT	WTC-118
W380316901	31.70	37.87	5.96	33.20	PTFE	WTC-336
W380320805	32.00	38.80	5.00	33.50	NBR/BFT	WTC-126
W380320802	32.00	39.60	4.20	33.50	NBR/BFT	WTC-114
W380350802	35.00	41.80	5.00	36.50	NBR/BFT	WTC-201
W380356402	35.00	42.00	5.00	36.50	FKM/BFT	WTC-223
W380356401	35.00	43.00	4.70	36.50	PTFE	WTC-299
W380350804	35.00	43.00	4.70	36.50	NBR/BFT	WTC-330
W380366401	36.00	42.80	5.00	37.50	FKM/BFT	WTC-113
W380360801	36.00	42.80	5.00	37.50	NBR/BFT	WTC-137

Part No.	d (f8)	D (H9)	L (+0.2)	D1	Matl.	Mould No.
W380360805	36.00	43.00	4.50	37.50	NBR/BFT	WTC-186
W380366404	36.00	43.00	5.00	37.50	FKM/BFT	WTC-173
W380360803	36.00	43.20	4.50	37.50	NBR/BFT	WTC-102
W380367001	36.00	43.30	3.20	37.50	FKM/BFT	WTC-208
W380366403	36.00	43.60	4.20	37.50	FKM/BFT	WTC-282
W380360802	**36.00**	**43.60**	**4.20**	**37.50**	**NBR/BFT**	**WTC-189**
W380360806	36.00	44.00	4.40	37.50	NBR/BFT	WTC-245
W380367006	36.00	44.80	6.00	37.50	NBR/BFT	WTC-276
W380400801	**40.00**	**46.80**	**5.00**	**41.50**	**NBR/BFT**	**WTC-267**
W380400807	40.00	46.80	5.50	41.50	NBR/BFT	WTC-120
W380400805	40.00	47.00	4.60	41.50	NBR/BFT	WTC-283
W380407002	40.00	47.00	4.70	41.50	NBR/BFT	WTC-191
W380406403	40.00	47.50	4.50	41.50	FKM/BFT	WTC-254
W380400806	40.00	48.00	5.00	41.50	NBR/BFT	WTC-212
W380400808	40.00	48.30	4.50	41.50	NBR/CAT	WTC-168
W380406402	40.00	48.60	6.20	41.50	FKM/BFT	WTC-159
W380400802	**40.00**	**48.80**	**6.30**	**41.50**	**NBR/BFT**	**WTC-181**
W380407001	40.00	48.80	6.30	41.50	FKM/BFT	WTC-230
W380407004	40.00	48.80	6.30	41.50	FKM/BFT	WTC-321
W380407003	40.00	48.80	6.30	41.50	FKM/BFT	WTC-314
W380420801	42.00	50.80	6.30	43.50	NBR/BFT	WTC-111
W380457002	45.00	51.80	4.70	46.50	NBR/BFT	WTC-286
W380450808	**45.00**	**51.80**	**5.00**	**46.50**	**NBR/BFT**	**WTC-138**
W380450810	45.00	53.00	6.00	46.50	NBR/BFT	WTC-233
W380456402	45.00	53.80	6.00	46.50	FKM/BFT	WTC-101
W380456601	45.00	53.80	6.00	46.50	FKM/CAT	WTC-188
W380450804	**45.00**	**53.80**	**6.00**	**46.50**	**NBR/BFT**	**WTC-115**
W380450809	45.00	53.80	6.00	46.50	NBR/GLT	WTB-108
W380450803	45.00	53.80	6.30	46.50	NBR/BFT	WTC-320
W380456401	45.00	53.80	6.30	46.50	FKM/BFT	WTC-313
W380450807	45.00	54.50	6.00	46.50	NBR/BFT	WTC-253
W380450812	45.00	55.00	6.50	46.50	NBR/BFT	WTC-335
W380470801	47.40	53.80	6.00	48.90	NBR/BFT	WTC-279
W380506401	50.00	56.50	6.00	51.50	FKM/BFT	WTC-169
W380506404	50.00	56.80	5.00	51.50	FKM/BFT	WTC-133
W380507004	50.00	57.65	5.80	51.50	FKM/BFT	WTC-174
W380506405	50.00	58.80	6.30	51.50	FKM/BFT	WTC-175
W380500803	50.00	58.80	6.30	51.50	NBR/BFT	WTC-103
W380507005	50.80	57.60	5.00	52.30	FKM/BFT	WTC-205
W380507006	50.80	58.72	6.30	52.30	FKM/BFT	WTC-303
W380520802	52.00	60.80	6.30	53.50	NBR/BFT	WTC-318
W380540801	54.80	66.00	3.90	56.30	NBR/BFT	WTC-315
W380550801	55.00	61.80	5.00	56.50	NBR/BFT	WTC-109
W380550804	55.00	62.00	5.00	56.50	NBR/BFT	WTC-306
W380557001	55.00	63.00	4.50	56.50	NBR/BFT	WTC-323
W380556401	55.00	63.00	4.50	56.50	FKM/BFT	WTC-255
W380550805	55.00	63.80	6.00	56.50	NBR/BFT	WTC-334
W380550803	55.00	66.00	3.90	56.50	NBR/BFT	WTC-274
W380567004	56.00	62.80	5.00	57.50	FKM/BFT	WTC-278
W380566401	56.00	62.80	5.00	57.50	FKM/BFT	WTC-155
W380560801	56.00	62.80	5.00	57.50	NBR/BFT	WTC-236
W380560805	56.00	63.00	4.50	57.50	NBR/BFT	WTC-264

Bold sizes are readily available in stock.
Other materials are available on request.

W38

Heavy Duty Scraper Ring

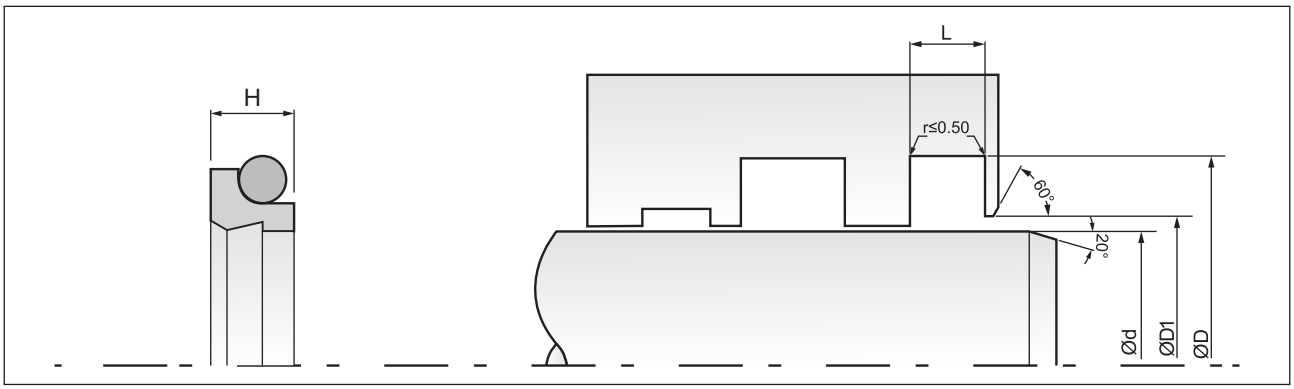

Part No.	d (f8)	D (H9)	L (+0.2)	D1	Matl.	Mould No.
W380567003	56.00	63.00	6.30	57.50	NBR/BFT	WTC-260
W380566405	56.00	64.80	6.00	57.50	FKM/GLT	WTC-117
W380566402	56.00	64.80	6.00	57.50	FKM/BFT	WTC-152
W380560803	56.00	64.80	6.30	57.50	NBR/GLT	WTC-128
W380560802	**56.00**	**64.80**	**6.30**	**57.50**	**NBR/BFT**	**WTC-124**
W380567005	56.00	64.80	6.30	57.50	FKM/BFT	WTC-311
W380560804	56.00	66.00	6.30	57.50	NBR/BFT	WTC-248
W380576401	57.00	63.80	5.00	58.50	FKM/BFT	WTC-210
W380570801	57.15	63.49	4.77	58.65	NBR/BFT	WTC-151
W380607002	60.00	66.80	5.00	61.50	NBR/BFT	WTC-289
W380600802	60.00	66.80	6.00	61.50	NBR/BFT	WTC-157
W380606401	60.00	68.80	6.00	61.50	FKM/BFT	WTC-240
W380607001	60.00	68.80	6.30	61.50	NBR/BFT	WTC-146
W380606403	60.00	68.80	6.30	61.50	FKM/BFT	WTC-294
W380636403	63.00	69.80	5.00	64.50	FKM/BFT	WTC-234
W380630801	**63.00**	**69.80**	**5.00**	**64.50**	**NBR/BFT**	**WTC-202**
W380636402	63.00	71.80	6.30	64.50	FKM/BFT	WTC-132
W380650801	**65.00**	**73.80**	**6.30**	**66.50**	**NBR/BFT**	**WTC-110**
W380650802	65.00	74.00	5.70	66.50	NBR/BFT	WTC-247
W380706406	70.00	77.00	4.20	71.50	FKM/CAT	WTC-192
W380700806	70.00	77.00	4.50	71.50	NBR/BFT	WTC-199
W380700803	70.00	78.80	6.00	71.50	NBR/BFT	WTC-121
W380706402	70.00	78.80	6.00	71.50	FKM/BFT	WTC-178
W380700809	70.00	79.00	5.50	71.50	NBR/BFT	WTC-185
W380706404	70.00	80.00	6.00	71.50	FKM/BFT	WTC-256
W380700812	70.00	80.00	6.00	71.50	NBR/BFT	WTC-309
W380700802	70.00	82.20	8.10	71.50	NBR/BFT	WTC-160
W380707001	70.00	82.20	8.10	71.50	FKM/BFT	WTC-148
W380700810	70.00	82.20	8.10	71.50	NBR	WTC-127
W380700811	70.00	83.00	6.00	71.50	NBR/BFT	WTC-265
W380717002	71.00	79.80	6.00	72.50	NBR/BFT	WTC-322
W380757002	75.00	83.80	6.00	76.50	NBR/BFT	WTC-229
W380750806	75.00	87.00	9.50	76.50	NBR/BFT	WTC-206
W380757003	75.00	87.20	8.10	76.50	NBR/BFT	WTC-119
W380800801	**80.00**	**88.80**	**6.00**	**81.50**	**NBR/BFT**	**WTC-156**
W380806401	80.00	88.80	6.00	81.50	FKM/BFT	WTC-136
W380800807	80.00	88.80	7.50	81.50	NBR/BFT	WTC-310
W380800806	80.00	89.00	5.70	81.50	NBR/BFT	WTC-198
W380800803	80.00	92.20	8.10	81.50	NBR/BFT	WTC-304
W380850801	85.00	97.20	8.10	86.50	NBR/BFT	WTC-263
W380856402	85.00	97.20	8.10	86.50	FKM/BFT	WTC-122
W380870801	87.60	95.00	5.50	89.10	NBR/BFT	WTC-249
W380880801	88.00	96.80	6.00	89.50	NBR/BFT	WTC-182
W380887002	88.00	97.10	6.00	89.50	FKM/BFT	WTC-270
W380887001	88.00	97.10	6.30	89.50	FKM/BFT	WTC-227
W380906401	90.00	98.80	6.00	91.50	FKM/BFT	WTC-232
W380907001	90.00	98.80	6.00	91.50	NBR/BFT	WTC-161
W380900801	**90.00**	**98.80**	**6.00**	**91.50**	**NBR/BFT**	**WTC-268**
W380906404	90.00	99.00	5.70	91.50	FKM/BFT	WTC-271
W380900806	90.00	100.00	6.00	91.50	NBR/BFT	WTC-105
W380900807	90.00	102.00	8.30	91.50	NBR/BFT	WTC-104
W380900811	90.00	102.00	9.50	91.50	NBR/BFT	WTC-207

Part No.	d (f8)	D (H9)	L (+0.2)	D1	Matl.	Mould No.
W380900802	90.00	102.20	8.10	91.50	NBR/BFT	WTC-213
W380906402	90.00	102.20	8.10	91.50	FKM/BFT	WTC-266
W380957001	95.00	103.80	6.00	96.50	NBR/BFT	WTC-285
W380957006	95.00	106.70	7.60	96.50	NBR/BFT	WTC-338
W380957003	**95.00**	**107.20**	**8.10**	**96.50**	**NBR/BFT**	**WTC-226**
W380986401	98.00	106.80	6.00	99.50	FKM/BFT	WTC-125
W380986901	98.00	107.00	5.80	99.50	FKM/PTFE	WTC-288
W381007004	100.00	108.00	6.00	101.50	NBR/BFT	WTC-216
W381006403	100.00	108.00	6.00	101.50	FKM/BFT	WTC-272
W381000801	100.00	108.80	6.00	101.50	NBR/BFT	WTC-130
W381006401	100.00	108.80	6.00	101.50	FKM/BFT	WTC-179
W381000805	100.00	112.00	8.50	101.50	NBR/PTFE	WTC-172
W381006402	100.00	112.20	8.10	101.50	FKM/BFT	WTC-131
W381000802	100.00	112.20	8.10	101.50	NBR/BFT	WTC-326
W381000806	100.00	112.20	8.50	101.50	NBR/BFT	WTC-222
W381007003	100.00	112.50	8.10	101.50	NBR/BFT	WTC-176
W381016401	101.60	111.12	6.80	103.10	FKM/BFT	WTC-296
W381050801	105.00	117.20	8.10	106.50	NBR/BFT	WTC-333
W381100801	110.00	118.80	6.00	111.50	NBR/BFT	WTC-235
W381106401	110.00	118.80	6.00	111.50	FKM/BFT	WTC-153
W381106402	110.00	122.20	8.10	111.50	FKM/BFT	WTC-241
W381100802	110.00	122.20	8.10	111.50	NBR/BFT	WTC-298
W381120801	112.00	120.80	6.00	113.50	NBR/BFT	WTC-129
W381120802	112.00	124.00	8.50	113.50	NBR/PTFE	WTC-171
W381130803	113.00	121.80	6.00	114.50	NBR/BFT	WTC-316
W381130804	113.00	123.00	8.50	114.50	NBR/BFT	WTC-331
W381130801	113.00	123.00	8.50	114.50	NBR/PTFE	WTC-163
W381150801	115.00	123.80	6.00	116.50	NBR/BFT	WTC-187
W381150803	115.00	127.20	8.10	116.50	NBR/BFT	WTC-284
W381160801	116.00	124.00	6.00	117.50	NBR/BFT	WTC-190
W381200802	120.00	128.80	6.00	121.50	NBR/BFT	WTC-180
W381207001	120.00	136.80	9.70	121.50	NBR/BFT	WTC-339
W381250801	125.00	133.80	6.00	126.50	NBR/BFT	WTC-143
W381306401	130.00	138.00	6.00	131.50	FKM/BFT	WTC-292
W381300802	130.00	142.20	8.10	131.50	NBR/BFT	WTC-295
W381330801	133.00	145.20	8.10	134.50	NBR/BFT	WTC-332
W381356401	135.00	143.80	6.00	136.50	FKM/BFT	WTC-301
W381360801	136.00	150.00	6.00	137.50	NBR/BFT	WTC-209
W381377002	137.00	150.00	12.00	138.50	NBR/BFT	WTC-251
W381400801	140.00	148.80	6.00	141.50	NBR/BFT	WTC-149
W381406401	140.00	148.80	6.00	141.50	FKM/BFT	WTC-193
W381400802	140.00	156.00	9.50	141.50	NBR/BFT	WTC-184
W381507001	150.00	158.80	6.00	151.50	NBR/BFT	WTC-123
W381500801	**150.00**	**158.80**	**6.00**	**151.50**	**NBR/BFT**	**WTC-269**
W381506401	150.00	158.80	6.00	151.50	FKM/BFT	WTC-297
W381520802	152.00	161.00	5.55	153.50	CAT/NBR	WTC-140
W381600805	160.00	168.80	6.00	161.50	NBR/BFT	WTC-220
W381600806	160.00	170.00	5.00	161.50	NBR/BFT	WTC-328
W381607001	160.00	176.00	9.50	161.50	NBR/BFT	WTC-211
W381800802	180.00	188.80	6.00	181.50	NBR/BFT	WTC-237
W381807005	180.00	192.20	8.10	181.50	NBR/BFT	WTC-170
W381807007	180.00	196.00	9.50	181.50	FKM/BFT	WTC-261

Bold sizes are readily available in stock.
Other materials are available on request.

W38

Heavy Duty Scraper Ring

MAX SPARE LIMITED
QUALITY. PRECISION. SPEED.

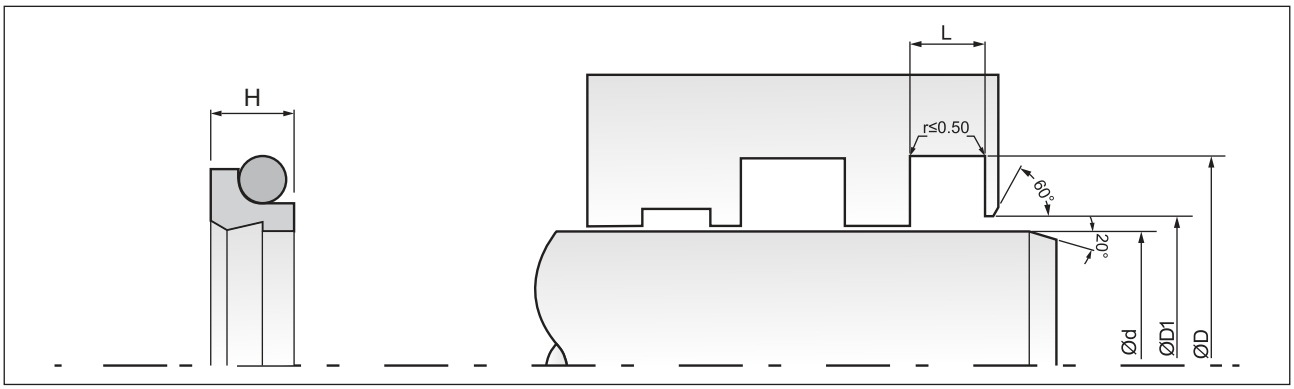

Part No.	d (f8)	D (H9)	L (+0.2)	D1	Matl.	Mould No.
W382006401	200.00	208.80	6.00	201.50	FKM/BFT	WTC-108
W382000802	200.00	208.80	6.00	201.50	NBR/BFT	WTC-196
W382000805	200.00	209.20	6.20	201.50	NBR/BFT	WTC-273
W382000804	200.00	216.00	9.00	201.50	NBR/PTFE	WTC-177
W382100801	210.00	218.80	6.00	211.50	NBR/BFT	WTC-287
W382207001	220.00	228.80	6.00	221.50	NBR/BFT	WTC-150
W382287001	228.60	241.30	5.70	230.10	FKM/BFT	WTC-302
W382307002	230.00	246.00	9.50	231.50	NBR/BFT	WTC-337
W382307001	230.00	246.00	9.50	231.50	FKM/BFT	WTC-262
W382307003	230.00	247.80	6.70	231.50	FKM/BFT	WTC-340
W382400801	240.00	250.00	6.00	241.50	NBR/BFT	WTC-135
W38240L501	240.28	257.81	9.39	241.78	NBR/PU	WPH-1641
W382420801	242.00	250.80	6.00	243.50	NBR/BFT	WTC-154
W382500801	250.00	266.00	9.50	251.50	NBR/BFT	WTC-290
W382606401	260.00	272.20	8.40	261.50	FKM/BFT	WTC-324
W382700801	270.00	285.00	13.00	272.00	NBR/BFT	WTC-183
W382707001	270.00	286.00	9.50	272.00	FKM/BFT	WTC-214
W382800801	280.00	292.20	8.40	282.00	NBR/BFT	WTC-134

Part No.	d (f8)	D (H9)	L (+0.2)	D1	Matl.	Mould No.
W382800802	280.00	296.00	9.50	282.00	NBR/BFT	WTC-258
W382850801	285.00	301.00	9.50	287.00	NBR/BFT	WTC-257
W382907001	290.00	304.00	8.10	292.00	NBR/BFT	WTC-293
W383050802	305.00	320.00	8.10	307.00	NBR/BFT	WTC-167
W383200802	320.00	332.20	8.40	322.00	NBR/BFT	WTC-307
W383200801	320.00	336.00	10.50	322.00	NBR/BFT	WTC-219
W383347001	334.50	354.00	9.00	336.50	NBR/BFT	WTC-275
W383400803	340.00	356.00	9.50	342.00	NBR/BFT	WTC-221
W383500802	350.00	362.20	8.40	352.00	NBR/BFT	WTC-291
W383800801	380.00	392.20	8.40	382.00	NBR/BFT	WTC-325
W384000802	400.00	424.00	14.00	402.00	NBR/BFT	WTC-165
W384000801	400.00	427.30	15.00	402.00	NBR/BFT	WTC-203
W384407001	440.00	464.00	14.00	442.00	FKM/BFT	WTC-215
W384700801	470.00	494.00	12.00	472.00	NBR/BFT	WTC-228
W384800801	480.00	496.00	11.00	482.00	NBR/BFT	WTC-308
W385601101	560.00	585.00	15.00	562.00	NBR/BFT	WTC-166
W386000801	600.00	616.00	10.50	602.00	NBR/BFT	WTC-224

Bold sizes are readily available in stock.
Other materials are available on request.

W39

Heavy Duty Scraper Ring

DETAILS

W39 is a double-acting, twin o-ring energized, rod wiper seal designed to include two different unique wiping geometries. The two lips combine to scrape debris from the rod and contain residual oil on rod extension, as well as allowing oil to pump back into the cylinder. The o-ring energizers provide the force necessary to maintain the engagement of the wiping lips against the sliding surface and allow the wiper to adjust for deflection. Generally, Bronze is used as filler. But, Glass/Graphite filled PTFE can also be made. The Bronze filled PTFE liner seal ring when in contact with the piston rod ensures a stick slip free movement & reduces friction to a minimum.

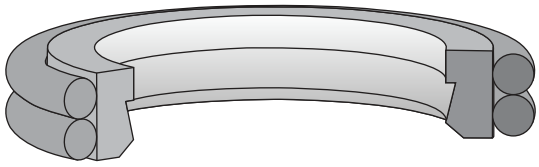

COMPATIBILITY

Mineral oils, bio oils, water soluble & water glycol fluids.

MATERIAL

Sealing Ring: Bronze filled PTFE
O Ring: Nitrile Rubber 70/75 Shore A
FKM 70/75 on request.

APPLICATION

- Medium duty, can also be used with heavy duty cycle applications.
- Indoor type machines.
- Mobile hydraulic, injection machines, industrial equipments.

OPERATING CONDITIONS

Temperature Range	:	-30°C to + 100°C (upto 220°C on request)
Speed	:	15.0 m/s

FEATURES

- Self-lubricating seal ring.
- Very good scraping effect.
- High surface speed.
- Friction at minimum.
- Compact gland.
- High resistance to media.
- Any size upto 1200 mm available on request.
- Long service life.

SURFACE ROUGHNESS

Static	:	1.6 µmRa
Dynamic	:	0.4 µmRa

INSTALLATION & ASSEMBLY

Careful fitting is a prerequisite for the correct functioning of the seal. Generally, wipers can be easily fitted by deforming it into kidney shape. (Refer installation procedure of S15 rod seal for more details).

W39

Heavy Duty Scraper Ring

MAX SPARE LIMITED
QUALITY. PRECISION. SPEED.

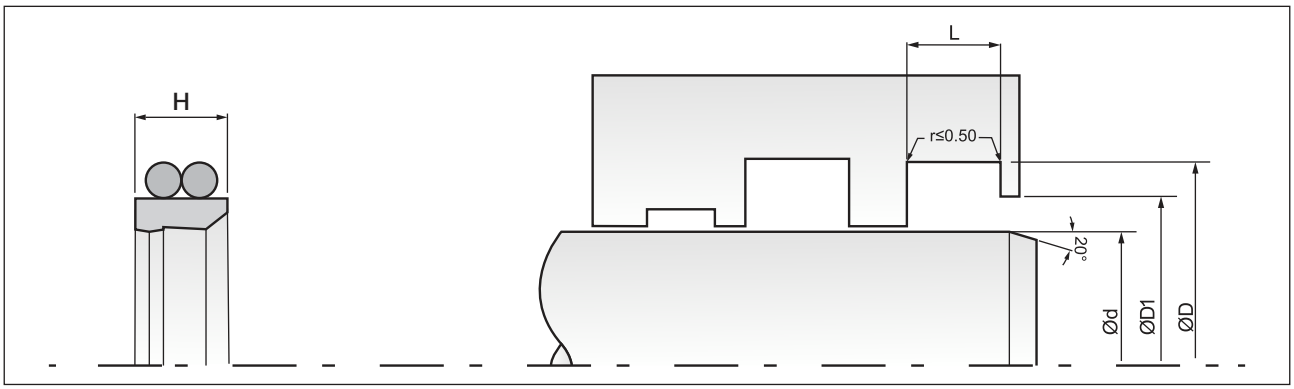

Part No.	d (f8)	D (H9)	L (+0.2)	D1	Matl.	Mould No.
W390206401	20.00	27.00	4.20	21.00	FKM/BFT	WTB-133
W390230801	23.60	29.94	4.60	24.60	NBR/GRT	WTB-123
W390250801	25.00	32.60	4.20	26.00	NBR/BFT	WTB-112
W390287001	28.00	35.60	4.20	29.00	NBR/BFT	WTB-130
W390286401	28.00	35.60	5.00	29.00	FKM/BFT	WTB-122
W390300801	30.00	37.60	4.20	31.00	NBR/BFT	WTB-110
W390300802	30.00	38.00	4.20	31.00	NBR/BFT	WTB-135
W390320801	32.00	39.60	4.20	33.00	NBR/BFT	WTB-116
W390360802	36.00	43.60	4.20	37.00	NBR/BFT	WTB-115
W390407001	40.00	48.80	6.30	41.50	NBR/BFT	WTB-152
W390456401	45.00	53.80	6.30	46.50	FKM/BFT	WTB-124
W390457001	45.00	53.80	6.30	46.50	NBR/BFT	WTB-118
W390450801	45.00	55.00	6.00	46.50	NBR/BFT	WTB-132
W390500801	50.00	58.80	6.30	51.50	NBR/BFT	WTB-103
W390547001	54.50	63.80	6.30	56.00	NBR/BFT	WTB-140
W390557001	55.00	63.80	6.30	56.50	NBR/BFT	WTB-106
W390567001	56.00	64.80	6.30	57.50	FKM/BFT	WTB-119
W390560801	56.00	64.80	6.30	57.50	NBR/BFT	WTB-111
W390567003	56.00	65.50	6.30	57.50	NBR/BFT	WTB-136
W390597001	59.50	68.80	6.30	61.00	NBR/BFT	WTB-141
W390607001	60.00	68.80	6.30	61.50	NBR/BFT	WTB-127
W390630802	63.00	71.80	6.30	64.50	NBR/BFT	WTB-153
W390630801	63.00	78.10	6.30	64.50	NBR/BFT	WTB-149
W390650802	65.00	73.80	6.30	66.50	NBR/BFT	WTB-158
W390707002	70.00	75.50	3.60	72.00	NBR/BFT	WTB-150
W390700801	70.00	82.20	8.10	72.00	NBR/BFT	WTB-128
W390747001	74.50	87.20	8.10	76.50	NBR/BFT	WTB-142
W390750803	75.00	87.20	8.10	77.00	NBR/BFT	WTB-109
W390750801	75.00	87.20	8.10	77.00	NBR/BFT	WTB-107

Part No.	d (f8)	D (H9)	L (+0.2)	D1	Matl.	Mould No.
W390800801	80.00	92.20	8.10	82.00	NBR/BFT	WTB-102
W390800802	80.00	92.50	8.10	82.00	NBR/BFT	WTB-137
W390847001	84.50	97.20	8.10	86.50	NBR/BFT	WTB-143
W390857001	85.00	97.20	8.10	87.00	NBR/BFT	WTB-154
W390887002	88.00	97.10	6.00	90.00	FKM/BFT	WTB-145
W390907001	90.00	102.10	8.00	92.00	FKM/BFT	WTB-139
W391000801	100.00	112.20	8.10	102.00	NBR/BFT	WTB-117
W391050801	105.00	117.20	8.10	107.00	NBR/BFT	WTB-121
W391107003	110.00	122.20	8.10	112.00	FKM/BFT	WTB-104
W391207001	120.00	132.20	8.10	122.00	NBR/BFT	WTB-125
W391250801	125.00	137.20	8.10	127.00	NBR/BFT	WTB-157
W391407001	140.00	156.00	11.50	142.00	FKM/BFT	WTB-147
W391506401	150.00	172.20	6.30/13.5	152.00	FKM/BFT	WTB-129
W391807002	180.00	192.20	12.00	182.00	NBR/BFT	WTB-126
W391900801	190.00	206.00	11.50	192.00	NBR/BFT	WTB-113
W392100801	210.00	226.00	11.50	212.00	NBR/CAT	WTB-156
W392307001	230.00	246.00	11.50	232.00	FKM/BFT	WTB-160
W392707001	270.00	287.50	12.00	272.00	NBR/BFT	WTB-148
W393100801	310.00	326.00	11.50	312.00	NBR/BFT	WTB-114
W393407001	340.00	356.00	11.50	342.00	NBR/BFT	WTB-146
W393600802	360.00	376.00	11.50	362.00	NBR/BFT	WTB-134
W394207001	420.00	436.00	11.50	422.00	FKM/BFT	WTB-155
W396500801	650.00	677.30	16.00	652.00	NBR/GLT	WTB-144
W396906401	690.00	717.30	18.00	692.50	FKM/BFT	WTB-131
W397000803	700.00	727.30	16.00	702.50	NBR/BFT	WTB-105
W397000802	700.00	727.30	16.00	702.50	NBR/BFT	WTB-120
W397700803	770.00	797.30	16.00	772.50	NBR/BFT	WTB-101
W397700801	770.00	797.30	16.00	772.50	NBR/GLT	WTB-138
W399000802	900.00	927.30	16.00	902.50	NBR/BFT	WTB-151

Bold sizes are readily available in stock.
Other materials are available on request.

GUIDE RINGS

MAX SPARE LIMITED
QUALITY. PRECISION. SPEED.

MAX TYPE	PRODUCT NAME	SEAL PROFILE	APPLICATION	PRESSURE (max) bar	TEMPERATURE	SPEED m/s	PAGE NO
	General Technical Information						433
PG1/ SG1	GUIDE RING		PISTON/ROD	-	-200°C TO +260°C	1.0	437
GS	GUIDE STRIP		PISTON/ROD	-	-200°C TO +260°C	1.0	437

Introduction

Maxspare offers a complete line of guide ring and guide strip to fit any hydraulic or pneumatic application. Guides adjust the radial loads of the forces acting on the cylinder assembly and guide the rod in the cylinder head, as well as the piston in the cylinder bore. The guide ring prevents metal-to-metal contact and improves the seal life performance. Compared to the metal guides the polymer guides have many advantages. Maxspare supplies different precision moulded and machined guide rings with different polymers and sizes, which make appropriate for your applications.

Applications

- Hydraulic and Pneumatic Cylinders.
- Chemical and process industry.
- Packaging Filling Machine.
- Piston accumulators.
- Medical Pumps / Compressors.
- Aerospace Pumps / Compressors.
- Automation.
- Industrial Booster Pumps.
- Cryogenic Pumping Systems.
- Machine tools.
- Injection moulding machines.
- Press brakes.
- Positioning cylinders.
- Servo hydraulics.
- Shock absorbers.
- Agriculture pumps.

Advantages

- Prevents metal-to-metal contacts in cylinders self lubricating feature.
- High load bearing capacity.
- Eliminates local stress concentrations.
- Wear-resistant.
- Long service life.
- Low friction between the sliding metallic components.
- Damping of vibrations.
- Improves seal life performance.
- Large contact area due to higher degree of elastic deformation distributes the load and reduces stress to counter-surface.
- Provide guidance and alignment.
- Act as a good wiper.

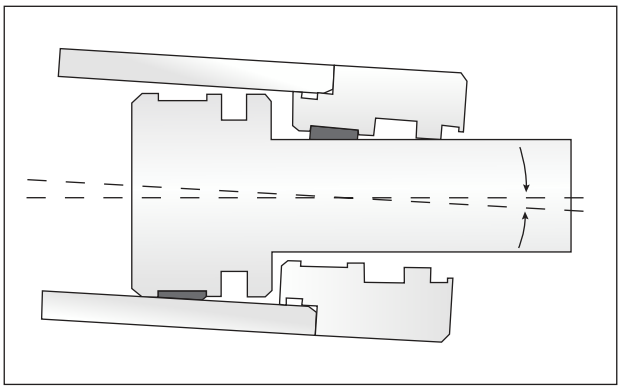

- Eliminates hydrodynamic pressure problems in the guide system.
- Easy installation even in closed grooves.
- Low service costs.

Design Instructions

The guide ring has a rectangular cross-section with chamfered edges, thus preventing edge forces from becoming too high in the corner radial of the grooves. Chamfers too facilitate installation easier. Depending on the material, wear rings are supplied in split or endless or as a strip. This Strip material is available in rolls (meters)

Non-Cut / Endless Guide Ring

Used primarily in piston and rod applications under 0.500" in diameter.

Angle / Oblique Cut Guide Ring

Angled cuts are recommended for use in reciprocating applications.

Butt / Straight Cut Guide Ring

Straight cuts are for rotary applications.

Step / Z Cut Guide Ring

Stepped cuts are used in special applications, e.g. for flow restriction. Use to help to provide piston guidance and help reduce pressure pulses on the piston seal.

Guide Ring Height Selection

While selecting the guide ring height, it is important to evaluate the transverse load that the guide ring will have to withstand. The elastic deformation, deflection and stretching of the components under the load creates an angular deviation between the piston and bore or rod and gland cap. Therefore, an assumption-based approach is recommended to determine the transverse load that occurred on the cylinder. As per thump rule, about 10-15% of the hydraulic force is applied as a transverse load.

The fig…. shows the total pressure area that the transverse force (F) from the side load will affect. The guide ring height(H) required for an application can be calculated from the below formula:

$$H_{min} = \frac{F \times f}{d \times Pr}$$

where:

F = Maximum radial load (N)
f = Safety factor (f=2)
d / D = Rod / Bore diameter (mm)
Pr = Permissible surface pressure (N/mm²)
Hmin = Minimum guide ring height (mm)

For Example:

d = 100
F = 60000 N
f = 2
Pr = 100 N/mm²

$$H_{min} = \frac{60000 \times 2}{100 \times 100} = 12\,mm$$

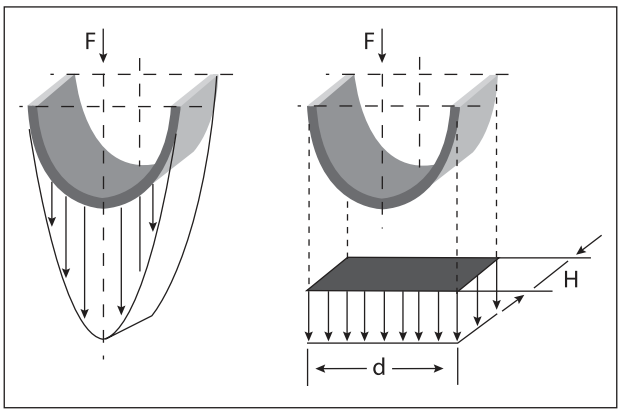

Fig. Calculation of guide ring height

The closest larger standard groove width of 15 mm must be selected for the above case.

Linear Length of Guide Ring

Guide strips are delivered in length form and can be cut to length to suit your requirements. The length not only calculated depending on the rod/bore diameter but also considering the thermal expansion in the guide ring while operation. also accounts for the gap 'G' necessary at the ends of the strip after fitting. These gap 'G' offsets the thermal expansion under the effects of temperature and prevents intermediate pressure and dry pressure in the system.The length of the wear ring can be calculated by using the following formula:

Rod application : $L(mm) = \pi \times (ØD - c/s) - G$
Piston application : $L(mm) = \pi \times (Ød + c/s) - G$
where

L	=	Length of wear strip (mm)
D	=	Piston diameter (mm)
d	=	Rod diameter(mm)
c/s	=	cross section/thickness of the wear strip
G	=	Required gap after fitting
H	=	Height of guide strip

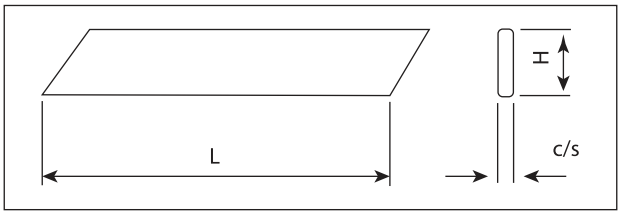

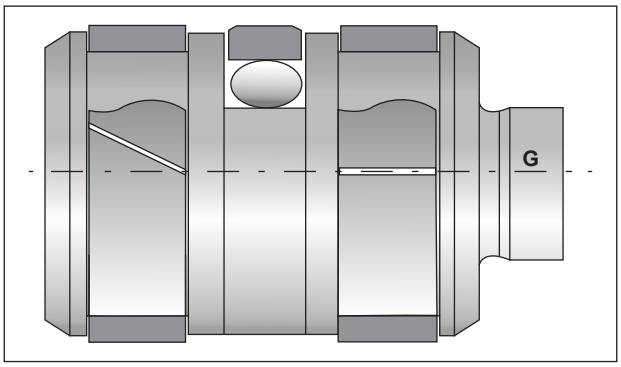

Material

For Calculating the required bearing material strength, it is important for determining the correct material to use. Below are criteria that need to be considered:

- The application whether rotary, reciprocating, or static.
- Surface speed.
- Lubrication.
- Temperature.
- Shaft / Bore material, hardness, and surface finish.

As per the different specific demands, guide strips, piston and rod guides are available in various materials.

Material	Compressive Strength at yield	Surface Speed	Operating Temp.	Size Availability	Uses
BFT (Bronze Filled Teflon)	Max. 15 N/mm2 (+25 °C) Max. 12 N/mm2 (+80 °C) Max. 8 N/mm2 (+120 °C)	15.0 m/s	-250 °C to +250 °C	Ring: 8 mm to 1000 mm Strip: 10 mtr continuous length	highly wear-resistant, low friction, especially for low to medium duty with limited radial forces.
PRW (Polyster Resin Fabric)	110 N/mm2 (+25 °C) 55 N/mm2 (+80 °C)	5.0 m/s	-40 °C to +120 °C	Ring: Not available Strip: 10 mtr continuous length	Heavy duty, Lubricated environment,
PF (Phenolic Resin Fabric)	300 N/mm2 (+25 °C) static 50 N/mm2 (+60 °C) Dynamic	1.0 m/s	-20 °C to +120 °C	Ring: 25 to 200 mm dia Strip: Not available	Heavy duty or high radial forces, Lubricated Environment
CAT (Carbon Filled Teflon)	Max. 15 N/mm2 (+25 °C) Max. 9 N/mm2 (+80 °C) Max. 5 N/mm2 (+120 °C)	15.0 m/s	-250 °C to +250 °C	Ring: 8 to 1000 mm dia Strip: 10 mtr continuous length	Light duty, Dry running
PA6 (Nylon)		1.0 m/s	-30 °C to +100 °C	Ring: 10 to 1000 mm dia Strip: Not available	Medium duty, Lubricated environment
GF PA66 (Glass Filled Nylon)	max. 75 N/mm2 at +60 °C max. 40 N/mm2 > +60 °C	1.0 m/s	-20 °C to +150 °C	Ring: 10 to 1000 mm dia Strip: Not available	Medium duty Lubricated environment
POM (Acetal)	max. 20 N/mm2	1.0 m/s	-40 °C to +140 °C	Ring: 10 mm to 200 mm dia Strip: Not available	Medium duty, Well in dry non-lubricated environment
Glass Filled Acetal		1.0 m/s	-40 °C to +160 °C	Ring: 10 mm to 200 mm dia Strip: Not available	Medium duty, Lubricated environment

Tolerances

Depending on the material and dimensions of the wear ring, the thickness tolerance is in the range from +0.00/-0.08 mm except for BFT (Bronze filled Teflon) where it is +0.02/-0.03 mm.

GS

Rod / Piston Wear Ring & Guide Strip

DETAILS

GS guide strip in PRW material designed to provide an extremely effective, hard wearing, and easy-to-use bearing solution for reciprocating, oscillating, and slow rotary movement applications. PRW wear strips are manufactured from Polyester fabric and thermoset resins, incorporating evenly dispersed solid lubricants. It is recommended for use in hydraulic cylinders exposed to high loads, such as in Steel mills, Mining, Hydraulic actuators, Mobile hydraulics, Presses, Oil & gas, etc... High compressive strength, good sliding behaviour, and exceptional wear resistance ensure long service life.

COMPATIBILITY

Mineral oils, water-based fluids and phosphate esters.

MATERIAL

Polyester Resin Fabric (PRW)

APPLICATION

Hydraulic and pneumatic cylinders pumps, compressors, chemical and process industries.

OPERATING CONDITIONS

Temperature Range	:	-40°C to +120°C
Pressure	:	110 N/mm² (+25° C)
		55 N/mm² (+80° C)
Speed	:	5.0 m/s

FEATURES

- High wear resistance.
- Good sliding behaviour.
- Dimensionally stable.
- Vibration absorbing.
- High radial forces.
- Dry running properties.
- Long service life.

SURFACE ROUGHNESS

Static	:	3.2 µmRa
Dynamic	:	0.4 µmRa

INSTALLATION & ASSEMBLY

The split design makes the installation of this rings easy snap-in fitting. This allows the product to be used in rods, rams, pistons in reciprocating applications for both rotary and static applications.

TOLERANCES

ROD

d1	f8
D2 = d1 + (c/s x 2)	≤ 80.00 H10
	> 80.00 H9
L1	+0.20 -0.00

PISTON

D1	H11
d2 = D1 - (c/s x 2)	h8
L1	+0.20 -0.00

GS

Rod / Piston Wear Ring & Guide Strip

MAX SPARE LIMITED
QUALITY. PRECISION. SPEED.

Piston Application (PG1)

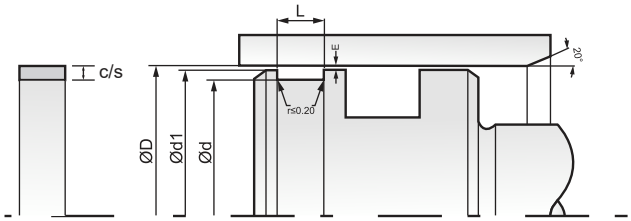

Rod Application (SG1)

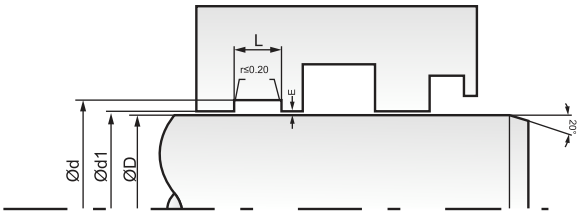

Part No.	Cross Section (c/s) mm	L (+0.20) mm	PG1 Bore Diameter Range (D) mm	SG1 Rod Diameter Range (d) mm
GS002N604	2.50	5.60	75 - 1000	70 – 1000
GS002N601	2.50	9.70	75 - 1000	70 – 1000
GS002N602	2.50	15.00	75 - 1000	70 – 1000
GS002N605	2.50	20.00	75 - 1000	70 – 1000
GS002N603	2.50	25.00	75 - 1000	70 – 1000
GS003N609	3.17	9.52	75 - 1000	70 – 1000
GS003N608	3.17	12.70	75 - 1000	70 – 1000
GS003N607	3.17	15.87	75 - 1000	70 – 1000
GS003N606	3.17	19.05	75 - 1000	70 – 1000
GS003N605	3.17	25.40	75 - 1000	70 – 1000
GS004N601	4.00	20.00	75 - 1000	70 – 1000
GS004N602	4.00	25.00	75 - 1000	70 – 1000
GS004N603	4.00	30.00	75 - 1000	70 – 1000
GS004N604	4.00	45.00	75 - 1000	70 – 1000

Bold sizes are readily available in stock.
Other materials are available on request.

GS

Rod / Piston Wear Ring & Guide Strip

DETAILS

The GS wear ring is supplied usually in split form. The split is oblique for Reciprocating / Oscillating application & straight for rotary movement applications. The GS wear ring is the most widely used general-purpose wear rings in light-duty applications and particularly for small diameters where the flexibility of the strip makes installation into a groove easier. The material used is PTFE with a Bronze content of 40%. For further improvement in performance, a Bronze content of 60% can be available on request. The GS wear ring can be cut to length to suit your specific requirements. Length not only calculated depending on the Rod/Cylinder bore diameter, but also considering thermal expansion in the GS wear ring in operation. The low friction PTFE material reduces 'stick-slip' between moving parts.

COMPATIBILITY

Hydraulic mineral oil, lubricating oil, water based soluble & water glycol fluids, synthetic fire-resistant fluids, and lubricating grease.

MATERIAL

BFT (Bronze filled Teflon compound with 40% bronze / 60% bronze for higher load bearing is recommended)

APPLICATION

Hydraulic and pneumatic cylinders pumps, compressors, chemical and process industries.

OPERATING CONDITIONS

Temperature Range	:	-200°C to +260°C
Pressure	:	Max 15 N/mm² (+25° C)
		Max 12 N/mm² (+80° C)
		Max 8 N/mm² (+120° C)
Speed	:	6.0 m/s (+80° C)
		15.0 m/s (+20° C)

FEATURES

- Stick-slip free.
- Suitable for non-lubricating fluids.
- Minimum static and dynamic friction coefficient for low operating temperature and energy loss.
- Outstanding lubrication.
- High wear resistance.
- Long service life.
- Suitable for new environmentally friendly hydraulic fluids.
- The embedding of foreign particles is enhanced.
- Good damping effect absorbs vibrations.

SURFACE ROUGHNESS

Static : 3.2 µmRa
Dynamic : 0.4 µmRa

INSTALLATION & ASSEMBLY

The split design makes the installation of this rings easy snap-in fitting. This allows the product to be used in rods, rams, pistons in reciprocating applications for both rotary and static applications.

TOLERANCES

ROD

d1	f9
D2 = d1 + (c/s x 2)	≤ 80.00 H10
	> 80.00 H9
L1	+0.20 -0.00

PISTON

D1	H11
d2 = D1 - (c/s x 2)	h8
L1	+0.20 -0.00

GS

Rod / Piston Wear Ring & Guide Strip

Piston Application (PG1)

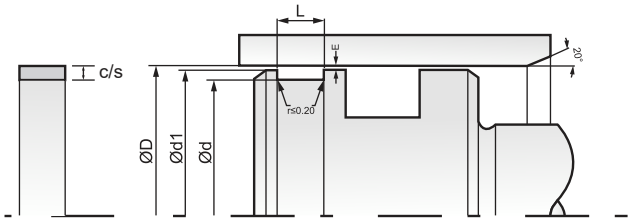

Rod Application (SG1)

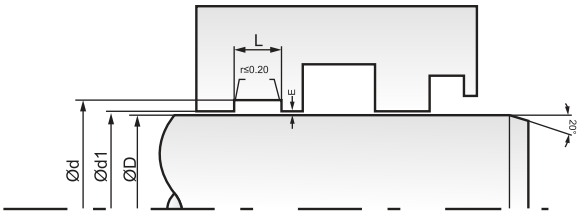

Part No.	Cross Section (c/s) mm	L (+0.20) mm	PG1 Bore Diameter Range (D) mm	SG1 Rod Diameter Range (d) mm
GS0017009	1.50	4.00	10 – 25	8 – 20
GS0017011	1.50	5.60	10 – 25	8 – 20
GS0087001	2.00	8.00	40 – 320	35 – 300
GS0027031	2.00	10.00	40 – 320	35 – 300
GS0027025	2.00	15.00	40 – 320	35 – 300
GS0027036	2.00	20.00	40 – 320	35 – 300
GS0027001	2.50	5.60	25 – 80	20 – 75
GS0027006	2.50	6.00	25 – 80	20 – 75
GS0027017	2.50	8.00	40 – 320	35 – 300
GS0027002	2.50	9.70	40 – 320	35 – 300
GS0027007	2.50	10.00	40 – 320	35 – 300
GS0027013	2.50	12.00	90 – 800	85 – 800
GS0027003	2.50	15.00	125 – 900	120 – 900
GS0027027	2.50	20.00	200 – 900	200 – 900
GS0027005	2.50	25.00	300 – 900	300 – 900
GS0037010	3.00	20.00	300 – 900	300 – 900
GS0037001	3.17	9.52	300 – 900	300 – 900
GS0037020	3.17	12.70	300 – 900	300 – 900
GS0037002	3.17	15.87	300 – 900	300 – 900
GS0037011	3.17	25.40	300 – 900	300 – 900

Bold sizes are readily available in stock.
Other materials are available on request.

BONDED SEALS

MAX SPARE LIMITED
QUALITY. PRECISION. SPEED.

MAX TYPE	PRODUCT NAME	SEAL PROFILE	APPLICATION	PRESSURE (max) bar	TEMPERATURE	SPEED m/s	PAGE NO
B01	BONDED SEAL		STATIC	1000	-30°C TO +100°C	0.5	443
B02	BONDED SEAL		STATIC	1000	-30°C TO +100°C	0.5	447

B01

Bonded Seal (Static Seal)

DETAILS

B01 consists of a metal washer with a rectangular cross-section and an elastomer sealing lip with a trapezoidal cross-section that is vulcanized to the inside. When a bolt is tightened, the metal ring resists the bursting forces and limits the deformation of the elastomer sealing ring. Under such a state, the elastomer sealing ring not only has a preload pressure on the mating surface higher than the pressure being sealed but also forms the profile of a U-ring to withstand higher pressures.

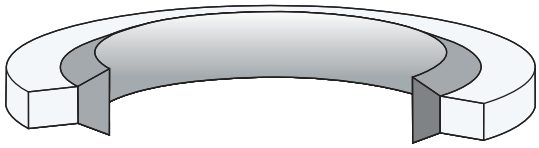

COMPATIBILITY

Mineral oils, bio oils, water soluble & water glycol fluids.

MATERIAL

Seal Ring : Nitrile Rubber 80/85 Shore A
FKM Rubber 80/85 Shore A
Metal : Mild Steel (MS)
(SS-304/SS-316 on request)

APPLICATION

- General purpose seal.
- High pressure resistance applications.

OPERATING CONDITIONS

Temperature Range : NBR -30°C to + 100°C
FKM -30°C to + 220°C
Pressure : 1000 Bar
Speed : Static

FEATURES

- Simple, captive assembly.
- Reliable low- and high-pressure sealing.
- Secure sealing.
- Metal Back-up.
- Cost effective solution for bolt/thread sealing.
- Standard dimensions.

SURFACE ROUGHNESS

Static : 15.0 µmRa
Dynamic : 3.2 µmRa

NOTE

Note: B01 Imperial, B01 Cetops (ISO 1179-1973), B01 German, B01 French & B01 Metric sizes are available.

B01

Bonded Seal (Static Seal)

MAX SPARE LIMITED
QUALITY. PRECISION. SPEED.

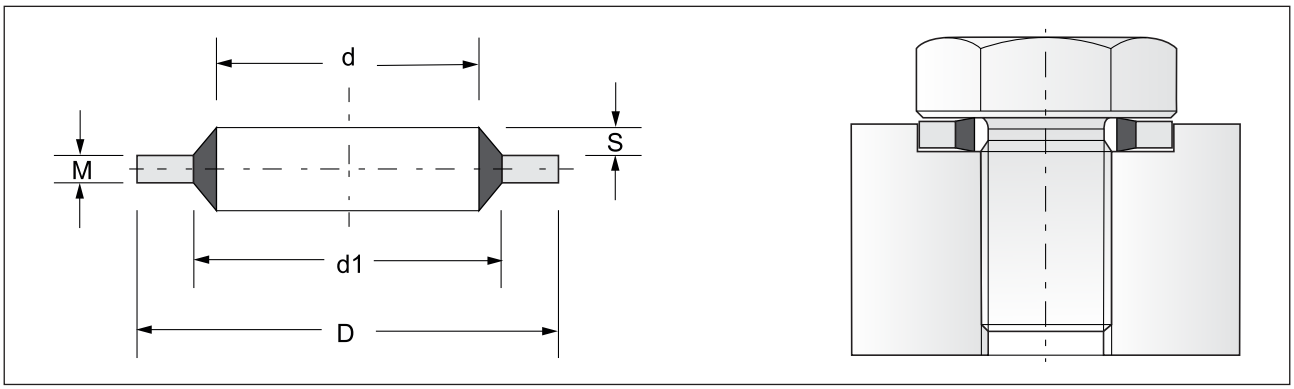

ORIGINAL RANGE (BRITISH IMPERIAL)

Part No.	Size		D	d1	d	S	M	Min. Burst	Material	Mould
	BSP	THREAD					(±0.10)	Pressure (BAR)		No.
B010034501	..	6BA	6.35	4.09	3.05	0.20/0.45	1.22	2150	SILICON	SDWY-323
B010041001	..	4BA	7.26	5.26	4.12	0.20/0.45	1.22	1570	NBR	SDWY-751
B010051006	..	2BA	8.38	6.35	5.21	0.20/0.45	1.22	1375	NBR	SDWY-545
B010061001	..	1/4	13.21	8.00	6.86	0.20/0.45	1.22	2450	NBR	
B010066603	**..**	**5/16**	**13.34**	**9.53**	**6.99**	**0.20/0.45**	**1.22**	**1700**	**FKM**	**SDWY-109**
B010061002	**..**	**5/16**	**13.34**	**9.53**	**6.99**	**0.20/0.45**	**1.22**	**1700**	**NBR**	**SDWY-327**
B010081002	..	5/16	14.22	10.04	8.64	0.20/0.45	1.22	1750	NBR	SDWY-166
B010101001	1/ 8	1/ 8	15.88	11.84	10.37	0.25/0.51	2.03	1500	NBR	SDWY-314
B010106602	**1/ 8**	**3/ 8**	**15.88**	**11.84**	**10.37**	**0.25/0.51**	**2.03**	**1500**	**FKM**	**SDWY-121**
B010111001	**..**	**0.4**	**18.36**	**12.45**	**11.26**	**0.25/0.51**	**2.03**	**1950**	**NBR**	**SDWY-476**
B010111002	..	7/16	19.05	13.08	11.69	0.25/0.51	2.03	1900	NBR	SDWY-522
B010136601	**1/ 4**	**1/ 2**	**20.57**	**15.21**	**13.74**	**0.25/0.51**	**2.03**	**1550**	**FKM**	**SDWY-116**
B010131001	**1/ 4**	**1/ 2**	**20.57**	**15.21**	**13.74**	**0.25/0.51**	**2.03**	**1550**	**NBR**	**SDWY-294**
B010141011	..	9/16	22.23	16.39	14.86	0.25/0.51	2.03	1575	NBR	SDWY-542
B010151001	..	0.6	22.23	17.30	15.83	0.25/0.51	2.03	1310	NBR	
B010176601	**3/ 8**	**..**	**23.80**	**18.75**	**17.28**	**0.25/0.51**	**2.03**	**1260**	**FKM**	**SDWY-104**
B010171001	**3/ 8**	**..**	**23.80**	**18.75**	**17.28**	**0.25/0.51**	**2.03**	**1260**	**NBR**	**SDWY-147**
B010161008	..	5/ 8	25.40	18.75	16.51	0.25/0.51	2.03	1550	NBR	SDWY-578
B010191001	..	3/ 4	26.92	21.21	19.69	0.25/0.51	2.49	1260	NBR	SDWY-399
B010216601	**1/ 2**	**13/16**	**28.58**	**23.01**	**21.54**	**0.25/0.51**	**2.49**	**1150**	**FKM**	**SDWY-122**
B010211001	**1/ 2**	**13/16**	**28.58**	**23.01**	**21.54**	**0.25/0.51**	**2.49**	**1150**	**NBR**	**SDWY-168**
B010236601	**5/ 8**	**7/ 8**	**31.75**	**24.97**	**23.49**	**0.25/0.51**	**2.49**	**1250**	**FKM**	**SDWY-103**
B010231001	**5/ 8**	**7/ 8**	**31.75**	**24.97**	**23.49**	**0.25/0.51**	**2.49**	**1250**	**NBR**	**SDWY-139**
B010241001	..	15/16	33.27	26.04	24.26	0.25/0.51	2.49	1275	NBR	SDWY-348
B010276601	**3/ 4**	**1**	**34.93**	**28.53**	**27.05**	**0.25/0.51**	**2.49**	**1060**	**FKM**	**SDWY-588**
B010271001	**3/ 4**	**1**	**34.93**	**28.53**	**27.05**	**0.25/0.51**	**2.49**	**1060**	**NBR**	**SDWY-229**
B010291001	..	1 1/ 8	36.58	30.86	29.33	0.25/0.51	2.49	900	NBR	
B010306601	**7/ 8**	**1 3/16**	**38.10**	**32.29**	**30.81**	**0.25/0.51**	**3.38**	**900**	**FKM**	**SDWY-110**
B010301001	**7/ 8**	**1 3/16**	**38.10**	**32.29**	**30.81**	**0.25/0.51**	**3.38**	**900**	**NBR**	**SDWY-193**
B010271002	..	1 1/16	38.61	30.61	27.82	0.25/0.51	2.49	1250	NBR	
B010321002	..	1 1/ 4	41.40	35.69	32.64	0.25/0.51	3.38	800	NBR	SDWY-429
B010336601	**1**	**1 5/16**	**42.80**	**36.88**	**33.89**	**0.25/0.51**	**3.38**	**810**	**FKM**	**SDWY-120**
B010331002	**1**	**1 5/16**	**42.80**	**36.88**	**33.89**	**0.25/0.51**	**3.38**	**810**	**NBR**	**SDWY-298**
B010351001	..	1 3/ 8	44.45	38.99	35.94	0.25/0.51	3.38	700	NBR	SDWY-291
B010356601	..	1 3/ 8	44.45	38.99	35.94	0.25/0.51	3.38	700	FKM	SDWY-291
B010381001	..	1 1/ 2	47.75	42.04	38.96	0.25/0.51	3.38	700	NBR	SDWY-411
B010426601	**1 1/ 4**	**1 5/ 8**	**52.38**	**45.93**	**42.93**	**0.25/0.51**	**3.38**	**690**	**FKM**	**SDWY-105**
B010421001	**1 1/ 4**	**1 5/ 8**	**52.38**	**45.93**	**42.93**	**0.25/0.51**	**3.38**	**690**	**NBR**	**SDWY-158**
B010451001	..	1 3/ 4	57.15	45.39	45.34	0.25/0.51	3.38	875	NBR	SDWY-412
B010486601	**1 1/ 2**	**1 7/ 8**	**58.60**	**51.39**	**48.44**	**0.25/0.51**	**3.38**	**690**	**FKM**	**SDWY-102**
B010481001	**1 1/ 2**	**1 7/ 8**	**58.60**	**51.39**	**48.44**	**0.25/0.51**	**3.38**	**690**	**NBR**	**SDWY-115**
B010516601	..	2	63.50	54.74	51.69	0.25/0.51	3.38	780	FKM	SDWY-543
B010546601	**1 3/ 4**	**2 1/ 8**	**69.85**	**58.30**	**54.89**	**0.25/0.51**	**3.38**	**950**	**FKM**	**SDWY-113**
B010541001	**1 3/ 4**	**2 1/ 8**	**69.85**	**58.30**	**54.89**	**0.25/0.51**	**3.38**	**950**	**NBR**	**SDWY-195**
B010601001	**2**	**..**	**73.03**	**63.63**	**60.58**	**0.25/0.51**	**3.38**	**700**	**NBR**	**SDWY-171**
B010606601	**2**	**..**	**73.03**	**63.63**	**60.58**	**0.25/0.51**	**3.38**	**700**	**FKM**	**SDWY-107**
B010641001	..	2 1/ 2	77.72	67.44	64.39	0.25/0.51	3.38	750	NBR	
B010666601	**2 1/ 4**	**..**	**79.50**	**69.98**	**66.68**	**0.25/0.51**	**4.48**	**670**	**FKM**	**SDWY-112**
B010661001	**2 1/ 4**	**..**	**79.50**	**69.98**	**66.68**	**0.25/0.51**	**4.48**	**670**	**NBR**	**SDWY-194**
B010766601	**2 1/ 2**	**..**	**90.17**	**79.38**	**76.08**	**0.25/0.51**	**3.38**	**680**	**FKM**	**SDWY-106**
B010761001	**2 1/ 2**	**..**	**90.17**	**79.38**	**76.08**	**0.25/0.51**	**3.38**	**680**	**NBR**	**SDWY-159**
B010891001	**3**	**..**	**101.47**	**92.84**	**89.09**	**0.25/0.51**	**3.38**	**550**	**NBR**	**SDWY-220**
B010896601	**3**	**..**	**101.47**	**92.84**	**89.09**	**0.25/0.51**	**3.38**	**550**	**FKM**	**SDWY-114**

Bold sizes are readily available in stock.
Other materials are available on request.

B01

Bonded Seal (Static Seal)

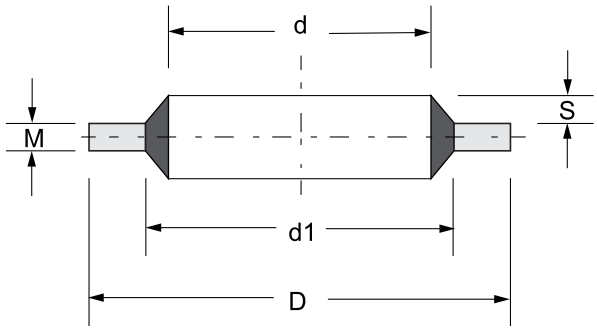

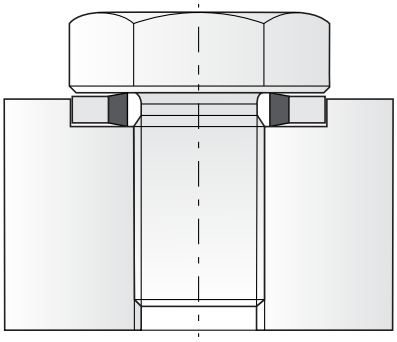

GERMAN METRIC RANGE

Part No.	Thread Size	D (+0.13)	d1 (±0.10)	d (±0.10)	S	M (+0.25)	Min. Burst Pressure (BAR)	Material	Mould No.
B010041001	M3.5	7.20	5.20	4.10	0.30	1.00	1600	NBR	
B010041002	M4	7.00	5.40	4.50	0.30	1.00	1270	NBR	
B010051001	M5	9.00	6.00	5.70	0.30	1.00	1400	NBR	SDWY-370
B010051002	M5	10.00	7.40	5.70	0.30	1.00	1510	NBR	
B010061018	M5.5	9.20	7.20	6.20	0.30	1.00	1220	NBR	
B010061009	M6	10.00	8.00	6.70	0.30	1.00	1120	NBR	SDWY-389
B010061017	M6	11.00	8.20	6.70	0.30	1.00	1480	NBR	SDWY-819
B010061021	M6	11.00	8.20	6.70	0.30	2.50	1480	NBR	
B010071003	M6.5	12.00	8.80	7.10	0.30	1.00	1560	NBR	
B010071002	M6.7	10.20	8.60	7.30	0.30	1.00	850	NBR	SDWY-377
B010081017	M8	13.40	9.40	8.50	0.30	1.00	1780	NBR	SDWY-746
B010081015	M8	13.00	10.00	8.70	0.30	1.00	1330	NBR	
B010081007	M8	14.00	10.40	8.70	0.30	1.00	1510	NBR	SDWY-162
B010081016	M8	16.00	10.40	8.70	0.30	1.00	2150	NBR	
B010091005	M8.5	13.30	10.50	9.30	0.30	1.00	1200	NBR	
B010101023	M10	16.00	12.00	10.35	0.40	2.00	1470	NBR	
B010101005	**M10**	**16.00**	**12.40**	**10.70**	**0.40**	**1.50**	**1300**	**NBR**	**SDWY-111**
B010106606	**M10**	**16.00**	**12.40**	**10.70**	**0.40**	**1.50**	**1300**	**FKM**	**SDWY-101**
B010106603	M10	18.00	12.40	10.70	0.40	1.50	1880	FKM	SDWY-430
B010111003	M11	16.30	12.70	11.40	0.40	1.50	1280	NBR	SDWY-299
B010111010	M11	18.80	13.70	11.80	0.40	1.50	1540	NBR	
B010111011	M11	19.10	13.50	11.80	0.40	1.50	1760	NBR	
B010121016	M12	18.00	14.40	12.70	0.40	1.50	1150	NBR	
B010121002	M12	20.00	14.40	12.70	0.40	1.50	1680	NBR	SDWY-312
B010131013	M13	20.00	15.40	13.70	0.40	1.50	1340	NBR	
B010131004	M13	22.00	15.40	13.70	0.40	1.50	1810	NBR	SDWY-222
B010141017	M13.5	18.70	15.70	14.00	0.40	1.50	900	NBR	
B010141018	M14	22.00	16.40	14.70	0.40	1.50	1510	NBR	
B010161006	M15	22.70	17.78	16.00	0.40	1.50	1260	NBR	
B010166401	M16	24.00	18.40	16.70	0.40	1.50	1370	FKM	SDWY-192
B010171002	M17	24.00	19.20	17.40	0.40	1.50	1150	NBR	
B010181002	M17.5	24.70	20.10	18.00	0.40	1.50	1070	NBR	SDWY-223
B010181003	M18	26.00	20.40	18.70	0.40	1.50	1260	NBR	SDWY-507
B010201001	M20	28.00	22.50	20.70	0.40	1.50	1140	NBR	SDWY-260
B010211014	M21	28.70	23.30	21.50	0.40	2.50	1080	NBR	SDWY-634
B010221012	M22	28.00	24.20	22.50	0.40	1.50	760	NBR	SDWY-646
B010221001	M22	30.00	24.40	22.70	0.40	2.00	1080	NBR	SDWY-218
B010221002	M22	30.00	24.40	22.70	0.40	3.00	1080	NBR	
B010241007	M24	32.00	26.40	24.70	0.40	2.00	1000	NBR	SDWY-562
B010271005	M27	36.00	29.00	27.20	0.40	2.00	1130	NBR	SDWY-387
B010346603	M30	39.00	33.00	31.00	0.40	2.00	870	FKM	SDWY-117
B010336604	M33	42.00	35.80	33.70	0.40	2.00	840	FKM	SDWY-553
B010391007	M33	43.00	36.40	34.30	0.40	2.00	870	NBR	
B010361001	M36	46.00	38.80	36.70	0.40	2.00	890	NBR	SDWY-388
B010401001	M39	51.00	41.90	40.00	0.40	2.50	1030	NBR	SDWY-409
B010421004	M42	53.00	44.40	42.70	0.40	3.00	930	NBR	SDWY-175
B010486602	M48	59.00	50.80	48.70	0.40	3.00	790	FKM	SDWY-471
B010521001	M51	60.00	54.10	52.00	0.40	3.00	540	NBR	
B010531001	M52	64.50	56.40	53.30	0.40	3.00	710	NBR	
B010606603	M60	73.00	63.00	60.70	0.40	3.00	780	FKM	SDWY-557
B010681001	M68	79.50	72.10	68.60	0.40	3.50	510	NBR	
B010761003	M75	90.30	79.10	76.08	0.40	3.38	700	NBR	
B010891003	M88	101.48	92.10	89.09	0.40	3.25	510	NBR	
B011271001	M125	143.67	132.70	127.00	0.40	5.00	420	NBR	SDWY-405

Bold sizes are readily available in stock.
Other materials are available on request.

B01

Bonded Seal (Static Seal)

MAX SPARE LIMITED
QUALITY. PRECISION. SPEED.

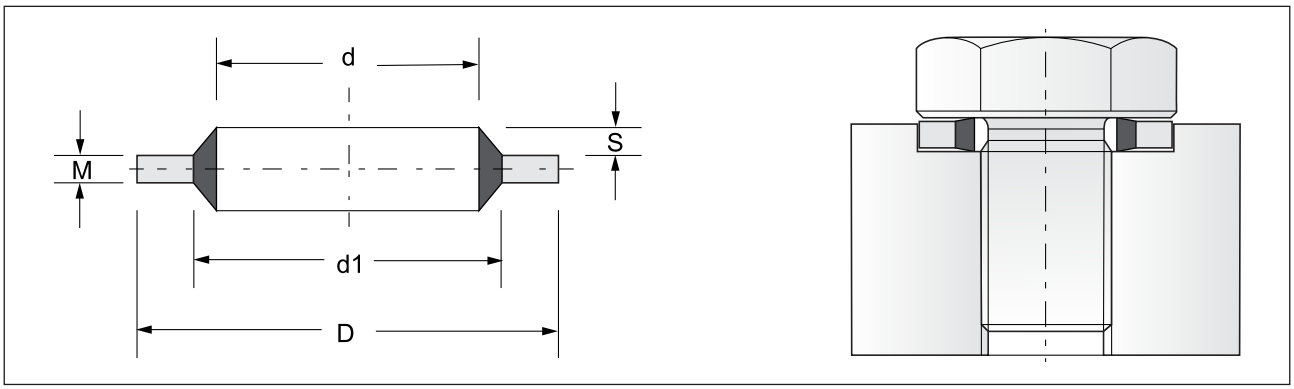

BONDED SEALS TO SUIT PIPE CONNECTIONS AND COUPLINGS. ISO 1179-1973 (FORMERLY IN RECOMMENDATIONS)

Part No.	Thread Size	D (+0.20)	d1 (+0.20)	d (+0.20)	S (+0.25)	M (±0.15)	Min. Burst Pressure (BAR)	Material	Mould No.
B010081003	1/16	12.70	9.90	8.30	0.25	1.25	1100	NBR	SDWY-564
B010101012	1/ 8	14.70	12.00	10.40	0.25	1.25	930	NBR	SDWY-205
B010131002	1/ 4	18.70	15.75	13.85	0.25	1.25	790	NBR	SDWY-451
B010171005	3/ 8	22.70	19.25	17.35	0.25	2.00	775	NBR	SDWY-467
B010211002	1/ 2	26.70	23.55	21.65	0.25	1.25	580	NBR	SDWY-456
B010271003	3/ 4	32.50	29.20	27.30	0.25	1.25	500	NBR	SDWY-452
B010341003	1	39.50	36.10	34.20	0.25	2.00	410	NBR	SDWY-276
B010421002	1 1/ 4	49.50	44.70	42.80	0.25	2.00	500	NBR	SDWY-453
B010481007	1 1/ 2	55.50	50.60	48.70	0.25	2.00	430	NBR	SDWY-468
B010601002	2	68.50	62.40	60.50	0.25	2.00	450	NBR	

FRENCH METRIC RANGE

Part No.	Thread Size	D (+0.13)	d1 (±0.10)	d (±0.10)	S	M (+0.25)	Min. Burst Pressure (BAR)	Material	Mould No.
B010031001	M3	7.50	5.00	3.60	0.30	1.00	1950	NBR	SDWY-417
B010041003	M4	9.00	6.00	4.60	0.30	1.00	2000	NBR	
B010056401	M5	10.00	7.00	5.60	0.30	1.00	1780	FKM	SDWY-354
B010061019	M6	11.00	8.00	6.60	0.30	1.00	1680	NBR	
B010061020	M6	13.27	8.00	6.85	0.30	1.00	1970	NBR	
B010071004	M6	11.40	8.40	7.00	0.30	1.00	1540	NBR	SDWY-475
B010081009	M8	13.00	10.00	8.60	0.30	1.00	1330	NBR	SDWY-254
B010101022	M10	17.00	12.10	10.70	0.40	1.50	1730	NBR	SDWY-820
B010116601	M11	18.10	13.20	11.80	0.40	1.50	1600	FKM	SDWY-458
B010121017	M12	19.00	14.10	12.70	0.40	1.50	1530	NBR	SDWY-474
B010131013	M13	20.10	15.20	13.80	0.40	1.50	1440	NBR	
B010146604	M14	21.00	16.10	14.70	0.30	1.50	1370	FKM	SDWY-548
B010166404	M16	23.00	18.10	16.70	0.30	1.50	1240	FKM	SDWY-675
B010171015	M16.5	23.90	18.70	17.20	0.40	2.10	1020	NBR	
B010171016	M17	23.70	18.80	17.40	0.40	1.50	1200	NBR	
B010186603	M18	27.00	20.40	18.70	0.30	2.00	1450	FKM	SDWY-586
B010206701	M20	29.00	22.40	20.70	0.30	2.00	1340	FKM	SDWY-783
B010211005	M21	30.00	23.40	21.70	0.40	2.00	1290	NBR	SDWY-613
B010226701	M22	31.00	24.40	22.70	0.40	2.00	1240	FKM	SDWY-782
B010231002	M23	32.00	25.40	23.70	0.40	2.00	960	NBR	
B010246603	M24	33.00	26.40	24.70	0.40	2.00	1160	FKM	SDWY-550
B010271010	M26	35.30	28.70	27.00	0.40	2.00	870	NBR	SDWY-390
B010271023	M27	36.00	29.40	27.70	0.40	2.00	1060	NBR	
B010281001	M28	36.00	30.30	28.60	0.40	2.00	730	NBR	
B010291001	M28.5	37.50	30.90	29.20	0.40	2.00	810	NBR	
B010306603	M30	39.00	32.40	30.70	0.40	2.00	970	FKM	SDWY-552
B010336604	M33	42.00	35.40	33.70	0.40	2.00	900	NBR	SDWY-553
B010376601	M36	48.00	35.40	37.00	0.40	2.50	1010	FKM	SDWY-554
B010401001	M39	51.00	39.60	40.00	0.40	2.50	950	NBR	SDWY-409
B010436601	M42	54.00	42.60	43.00	0.40	2.50	890	FKM	SDWY-555
B010466601	M45	57.00	48.60	46.00	0.40	2.50	860	FKM	SDWY-556
B010496601	M48	60.00	51.60	49.00	0.40	2.50	790	FKM	SDWY-527

Bold sizes are readily available in stock.
Other materials are available on request.

B02

Bonded Seal (Self Centering)

DETAILS

B02 Bonded seals are designed with an additional rubber lip than B01 type, making them self-centering. B02 has developed to eliminate the occurrence of leakage due to seal offset, the self-centering type bonded seal has the additional benefit of pre-assembling on to threads with the consequent production line savings. The thin seal membrane offers little resistance during assembly.

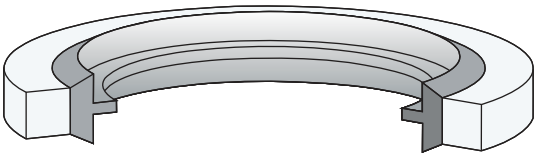

COMPATIBILITY

Mineral oils, bio oils, water soluble & water glycol fluids.

MATERIAL

Seal Ring : Nitrile Rubber 80/85 Shore A
FKM Rubber 80/85 Shore A
Metal : Mild Steel (MS)
(SS-304/SS-316 on request)

APPLICATION

- General purpose seal.
- High pressure resistance applications.

OPERATING CONDITIONS

Temperature Range : NBR -30°C to + 100°C
FKM -30°C to + 220°C
Pressure : 1000 Bar
Speed : Static

FEATURES

- Simple, captive assembly.
- Ability to pre-assemble.
- Concentrically located.
- Reliable low- and high-pressure sealing.
- Secure sealing.
- Metal Back-up.
- Cost effective solution for bolt/thread sealing.
- Standard dimensions.

SURFACE ROUGHNESS

Static : 15.0 µmRa
Dynamic : 3.2 µmRa

B02

Bonded Seal (Self Centering)

MAX SPARE LIMITED
QUALITY. PRECISION. SPEED.

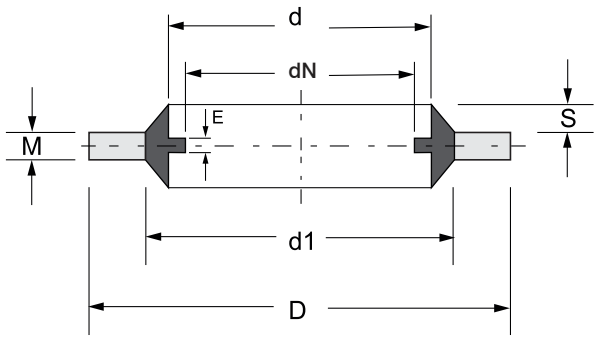

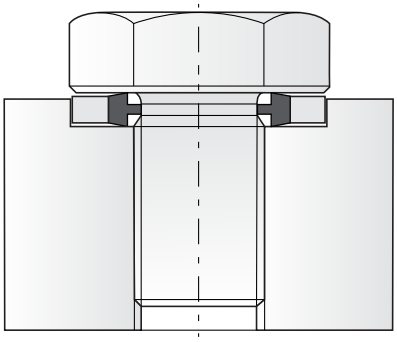

Part No.	Thread Size BSP	D (+0.13)	d1 (±0.10)	d (±0.13)	dN (±0.10)	E	S	M (±0.10)	Material	Mould No.
B020081003	1/ 8	15.88	11.84	10.37	8.26	0.38/0.63	0.25/0.51	2.03	NBR	SDWY-436
B020116602	1/ 4	20.57	15.21	13.74	11.18	0.38/0.63	0.25/0.51	2.03	FKM	SDWY-636
B020121001	5/ 8	25.40	18.75	16.51	12.90	0.38/0.63	0.25/0.51	2.03	NBR	SDWY-439
B020141001	3/ 8	23.80	18.75	17.28	14.76	0.38/0.63	0.25/0.51	2.03	NBR	SDWY-438
B020186401	1/ 2	28.58	23.01	21.54	18.24	0.38/0.63	0.25/0.51	2.49	FKM	SDWY-829
B020181004	1/ 2	28.58	23.01	21.54	18.24	0.38/0.63	0.25/0.51	2.49	NBR	SDWY-440
B020201001	5/ 8	31.75	24.97	23.49	20.27	0.38/0.63	0.25/0.51	2.49	NBR	SDWY-441
B020231002	3/ 4	34.93	28.53	27.05	23.83	0.38/0.63	0.25/0.51	2.49	NBR	SDWY-480
B020271003	7/ 8	38.10	32.29	30.81	27.51	0.38/0.63	0.25/0.51	2.49	NBR	SDWY-807
B020296401	1	42.80	36.88	33.89	29.92	0.38/0.63	0.25/0.51	3.38	FKM	SDWY-442
B020291001	1	42.80	36.88	33.89	29.92	0.38/0.63	0.25/0.51	3.38	NBR	SDWY-442
B020381002	1.1/4	52.38	45.93	42.93	38.45	0.38/0.63	0.25/0.51	3.38	NBR	SDWY-443
B020441002	1.1/2	58.60	51.39	48.44	44.45	0.38/0.63	0.25/0.51	3.38	NBR	SDWY-444
B020501001	1.3/4	69.85	58.30	54.89	50.42	0.38/0.63	0.25/0.51	3.38	NBR	SDWY-544
B020561002	2	73.03	63.63	60.58	56.26	0.38/0.63	0.25/0.51	3.38	NBR	SDWY-445
B020621001	2.1/4	79.50	69.98	66.68	62.36	0.38/0.63	0.25/0.51	3.38	NBR	
B020711001	2.1/2	90.17	79.38	76.08	71.50	0.38/0.63	0.25/0.51	3.38	NBR	

Part No.	Thread Size	D (+0.13)	d1 (±0.10)	d (±0.13)	dN (±0.10)	E	S	M (±0.10)	Material	Mould No.
B020031002	M4	7.00	5.40	4.50	3.40	0.38/0.63	0.25/0.51	1.00	NBR	
B020041002	M6	11.00	8.00	6.60	4.70	0.38/0.63	0.25/0.51	1.00	NBR	
B020061021	M8	14.00	10.40	8.70	6.40	0.38/0.63	0.25/0.51	1.00	NBR	
B020081002	M10	16.00	12.40	10.70	8.05	0.38/0.63	0.25/0.51	1.50	NBR	SDWY-794
B020091001	M12	19.00	14.10	12.70	9.73	0.38/0.63	0.25/0.51	1.50	NBR	
B020116603	M14	22.00	16.40	14.70	11.38	0.38/0.63	0.25/0.51	1.50	FKM	SDWY-635
B020131001	M16	24.00	18.40	16.70	13.50	0.38/0.63	0.25/0.51	1.50	NBR	SDWY-603
B020141001	M18	26.00	20.40	18.70	14.76	0.38/0.63	0.25/0.51	1.50	NBR	
B020161001	M20	28.00	22.40	20.70	16.76	0.38/0.63	0.25/0.51	1.50	NBR	
B020181004	M22	30.00	24.40	22.70	18.74	0.38/0.63	0.25/0.51	2.00	NBR	
B020201001	M24	32.00	26.40	24.70	20.11	0.38/0.63	0.25/0.51	2.00	NBR	
B020361001	M42	54.00	45.60	43.00	36.50	0.38/0.63	0.25/0.51	2.50	NBR	

Bold sizes are readily available in stock.
Other materials are available on request.

SEAL ENGINEERING REQUEST

INTRODUCTION

COMPANY : .....

ADDRESS : .....

CITY : ..... STATE : ..... COUNTRY: .....

CONTACT PERSON : ..... DESIGNATION : ..... PIN CODE : .....

PHONE NO. ..... E-MAIL : .....

NAME OF THE EQUIPMENT : - ..... PRODUCT TYPE ; .....

CORRESPONDING MAX SPARE STYLE : ..... (Ref. Seal Profile Chart)

APPLICATION : ☐ **HYDRAULIC** ☐ **PNEUMATIC** TYPE OF MOTION : ☐ **SINGLE ACTING** ☐ **DOUBLE ACTING**

PRESSURE : MINIMUM OPERATING MAXIMUM TEMPERATURE : MINIMUM OPERATING MAXIMUM

..... BAR ..... BAR ..... BAR ..... ^{0}C ..... ^{0}C ..... ^{0}C

HOUSING TYPE : ☐ **SPLIT** ☐ **SOLID** PISTON TYPE : ☐ **SPLIT** ☐ **SOLID**

EQUIPMENT MOUNTING STYLE : ☐ **HORIZONTAL** ☐ **VERTICAL** ☐ **TELESCOPIC**

EQUIPMENT CONDITION IN SEALING AREA : ☐ **SMOOTH** ☐ **SCORED** ☐ **PITTED**

LENGTH OF STROKE : ..... SEALING MEDIA : .....

ENCLOSED : ☐ EXISTING SAMPLE ☐ PRODUCT DRAWING

NOMINAL DIMENSIONS DETAILS : -

PISTON SEALS : -	D (CYL. BORE)	D1 (PISTON GROOVE DIA)	L (GROOVE WIDTH).....
ROD SEALS : -	d (ROD DIA)	D1 (HOUSING DIA)	L (GROOVE WIDTH) .....
WIPER SEALS : -	d (ROD DIA)	D1 (HOUSING DIA)	L (GROOVE WIDTH) .....
GUIDE RINGS :-	**PISTON : -** D	D1	L .....
	ROD : - d	D1	L .....
O'RING &	D (CYL. BORE)	D1 (GLAND GROOVE DIA).....	L (GROOVE WIDTH) .....

BACKUP RINGS : -

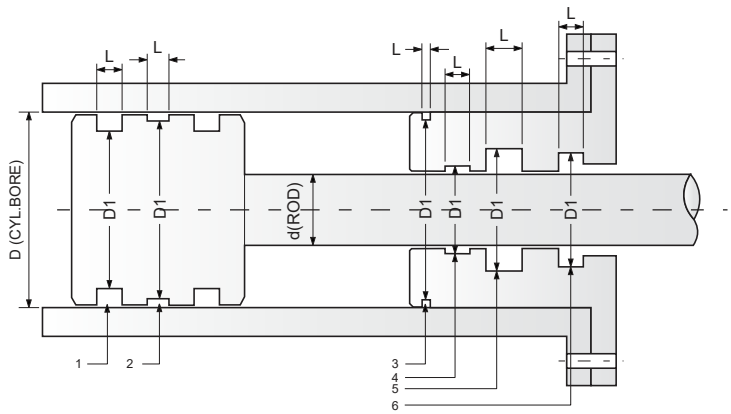

1. PISTON SEAL GROOVE
2. PISTON GUIDE RING GROOVE
3. O'RING & BACKUP RING GROOVE
4. ROD GUIDE RING GROOVE
5. ROD SEAL GROOVE
6. WIPER SEAL GROOVE

NOTE : PLEASE MAKE PHOTOCOPIES FOR YOUR REGULAR USE

Scan the QR code to send details

MAX GROUP COMPANIES

MAX SPARE LIMITED
Oil Seal House, A-403,
Road No. 28, Wagle Estate,
Thane (W) - 400604. INDIA.
T : +91-22-5028 4444
E : sales@maxspare.com
W : www.maxspare.com

UNITED VAN DER HORST LIMITED
E-29/30, MIDC Taloja,
Navi Mumbai - 410208. Maharashtra, INDIA
T: +91 22 27412728 / 29
E: sales@uvdhl.com
W: www.uvdhl.com

NIRLON V-BELT
Survey No. 50, Hissa No. 1,2,3B/2B,
Dahivali, Pali Phata, Khopoli, Tal. Khalapur,
Dist. Raigad, Maharashtra - 410203
T : +91-22-5028 4444
E : sales@maxspare.com
W : www.maxspare.com

THE RUBBER PRODUCTS LIMITED
C-44, Road No. 28, Wagle Industrial Estate,
Thane - 400604. Maharashtra, INDIA
T : +91-22-5028 4444
E: rpl@rubpro.com
W: www.rubpro.com